NSK AMERICA CORPORATION

2021
CATALOG



NSK America Corporation

www.nskamericacorp.com



Established in 1984 as a wholly owned subsidiary of NSK Nakanishi, Inc., NSK America Corporation serves as the North American Headquarters in Nakanishi's global network. NSK America provides sales, application support, and repair service for all Nakanishi industrial tools for the North, Central and South American markets.

Nakanishi Machine tool spindles and hand tools are engineered to meet the industry's demand for speed and precision. Meeting the challenge with the latest technology, NSK offers high speed milling and drilling spindles for turning, machining centers, and robotics. Our high speed precision hand tool offering includes electric and pneumatic drilling, polishing, grinding, engraving and deburring micro grinders as well as ultrasonic polishing equipment. Air, electric and air turbine spindles and motors are also available for small diameter milling, drilling, slitting, chamfering and grinding applications. Let our applications engineering department help you select the correct solution for your application.

NSK America is deeply committed to providing total solutions and customer satisfaction to its customers through our three vertical markets:



Lobby at our Hoffman Estates, IL North American Headquarters

Industrial Division:
www.nskamericacorp.com

Dental Division:
www.nskdental.us.com

Medical Department:
www.nsk-surgery.com

NSK America expert sales, customer service and technical support specialists utilize advanced industry knowledge to ensure every NSK product meets and exceeds your strictest requirements.

Our dedicated sales and support teams from each market look forward to thoroughly assisting you before, during and after the sale.

A wide variety of Industrial and Dental products are on display in our showroom





Comprehensive parts crib for hand tool and spindle maintenance.

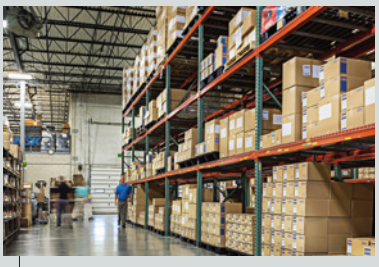

Our 12,000sq/ft. warehouse provides a substantial inventory for all markets served.



Our factory trained technicians provide in-house service to bring product back to original factory specifications.

iSpeed5

Fully Tool Changeable High Speed Electric Spindle System



Sheenus ZERO

Ultrasonic polisher that can be used for grinding, polishing and deburring.





Nakanishi Inc. utilizes new



100 staff members in the Design and Development Department.



Pursuing precision processing by the most advanced CNC lathes and machining centers.



Component assembly in our in-house clean rooms assuring excellent Q.C.

“In-house built components” exceeds 85%

Nakanishi has specialized in ultra high-speed rotary cutting technology.
Based on “Develop a product that satisfies users potential needs concept”, Nakanishi Inc. focuses on meeting our customers diverse requirements through timely product development, backed by our unparalleled production engineering and innovated technology.
Our highly technical manufacturing facility houses the most advanced CNC micro machining machines.
A vast wealth of knowledge in the fields of micro-machining, precision processing and manufacturing contributes to lower manufacturing costs while providing the finest products.
All products are inspected and performance tested before shipping.
Nakanishi Inc. products are shipped to over 130 countries around the world.





More than 160 of the most advanced CNC machines running 24 hours a day in our state of the art manufacturing facility

technologies for superior precision.



Measuring dynamic & static runout.



Measuring and analyzing runout and noise by FFT.

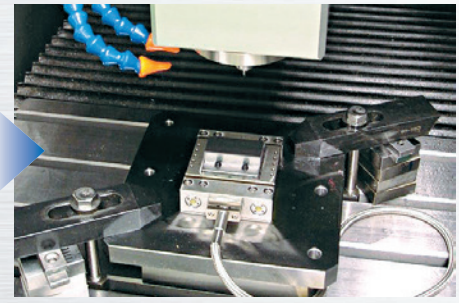

Measuring X/Y/Z cutting force by Dynamometer.



Nakanishi's specialized EMC testing facility allows testing of RF noise and EMC compliance to ensure that our products meet and exceed all current EMC requirements around the world.

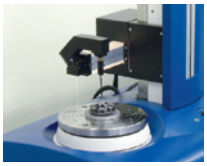

High-precision roundness measuring equipment. Core vibration is crucial to rotating equipment. Perfectly round rotating parts are necessary to achieve zero core vibration. Roundness is measured to an accuracy of 0.01 µm. (0.00001 mm)



Specialized waste treatment and recycling processes allow for 97% recycling of the cutting oils used in our facilities.



Water used throughout our factory is cleaned and processed prior to being released into a stream on our grounds where Koi and other fish live.

ISO 9001



ISO 14001



1 Hand Tools

ELECTRIC HAND GRINDER

Emax EVOlution *Modular Type Brushless Micro Grinder*..... 1 p2–19
1,000–40,000 rpm ELECTRICALLY DRIVEN



ESPERT 500 *Modular Type Brushless Micro Grinder*..... 1 p20–27
1,000–50,000 rpm ELECTRICALLY DRIVEN



PNEUMATIC HAND GRINDER

ROTUS *Modular Type High Torque Air Grinder*..... 1 p30–33
30,000 rpm PNEUMATICALLY DRIVEN



IMPULSE SERIES *Pencil Type Air Grinder*..... 1 p34–37
60,000 rpm PNEUMATICALLY DRIVEN



PRESTO II *Ultra-Precision High Speed Air Turbine Grinder*..... 1 p38
320,000 rpm PNEUMATICALLY DRIVEN



ULTRASONIC PRODUCT

Sheenus ZERO *Ultrasonic Polisher*.....  1 p40–41

LATHES, SPECIALTY PURPOSE, ROBOTIC APPLICATIONS

2 Electric Motor Spindles

iSpeed3 SERIES *Electric Micro Spindle*..... 2 p1–15
1,000–80,000 rpm 19.05mm, 20mm, 22mm, 25mm **ONE PIECE TYPE**



E2000 SERIES *Brushless Motor Spindle*..... 2 p17–35
1,000–50,000 rpm ø0.897", ø0.98", ø1.0" **MODULAR TYPE**



E3000 SERIES *Brushless Motor Spindle*..... 2 p37–51
1,000–60,000 rpm ø0.79", ø0.98", ø1.18" **ONE PIECE TYPE**



E3000 SERIES *Brushless Motor Spindle*..... 2 p52–69
1,000–60,000 rpm ø0.897", ø0.98", ø1.0", ø1.18" **MODULAR TYPE**

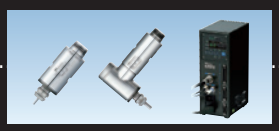

E3000 SERIES *Brushless Motor Spindle*..... 2 p70–76
1,000–80,000 rpm ø1.18", ø1.97" **MODULAR TYPE**



E4000 SERIES *Brushless Motor Spindle*..... 2 p77–89
1,000–40,000 rpm ø1.57" **ONE PIECE TYPE & MODULAR TYPE**



3 Pneumatic Motor Spindles

MA SERIES *Air Spindles & Motors*..... 3 p1–25
ø0.75", ø0.79", ø0.87", ø0.98", ø1.0" **MODULAR TYPE**



MS SERIES *Air Motor Spindle*..... 3 p27–34
ø0.75", ø0.79", ø0.87", ø0.98", ø1.0" **ONE PIECE TYPE**



4 Milling Machine Spindles

ELECTRIC SPINDLES

HES510 *Ultra-Precision High-Speed Milling Spindle*..... 4 p3–9
Max. 50,000 rpm ELECTRICALLY DRIVEN

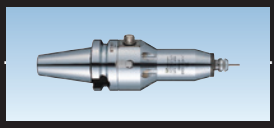

HES810 *Ultra-Precision High-Speed Milling Spindle*..... 4 p10–15
Max. 80,000 rpm ELECTRICALLY DRIVEN

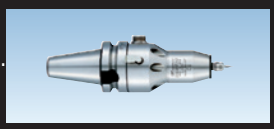

iSpeed5 *High-Speed Motor Spindle & Controller*..... 4 p17–24
1,000-80,000 rpm ELECTRICALLY DRIVEN FULLY TOOL CHANGEABLE



PNEUMATIC SPINDLES

HTS SERIES *Ultra-High Speed Air Turbine Milling Spindle*..... 4 p25–30
150,000 rpm PNEUMATICALLY DRIVEN

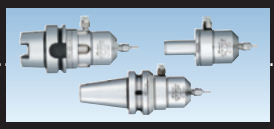

HPS SERIES *High-Speed Air Motor Milling Spindle*..... 4 p31–37
25,000/50,000 rpm PNEUMATICALLY DRIVEN

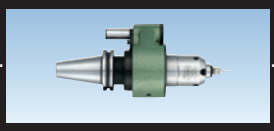

PLANET SERIES *High-Speed Air Turbine Jig Grinder*..... 4 p41–44
65,000 rpm PNEUMATICALLY DRIVEN



AIR BEARING SPINDLES

Xpeed SERIES *Air Bearing Air Turbine Spindle*..... 4 p47–50
120,000/160,000 rpm PNEUMATICALLY DRIVEN

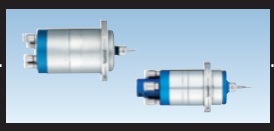

ABT SERIES *Air Bearing Air Turbine Spindle*..... 4 p51–53
100,000 rpm PNEUMATICALLY DRIVEN



5 Air Line Kits..... 5 p1–5
6 Parts..... 6 p1–19
7 Technical Data..... 7 p1–39
8 Application Examples..... 8 p1–16
INDEX Index..... C p1–25

MACHINE TOOL SPINDLE DIAMETER INDEX

Spindle Diameter	Type	Product Name	Page
ø0.75'' (ø19.05 mm)	Electric Micro Spindle	BM-319	2-p6
		BMJ-319	2-p10
		BMF-319	2-p12
	Air Motor Spindle	MSS-19 SERIES	3-p30
ø0.79'' (ø20 mm)	Electric Micro Spindle	BM-320 / BM-320F	2-p6, 2-p7
		BMJ-320	2-p10
		BMF-320	2-p12
	Electric Motor Spindle	EM20-S6000	2-p49
	Air Motor Spindle	MSS-20 SERIES	3-p30
ø0.87'' (ø22 mm)	Electric Micro Spindle	BM-322	2-p7
		BM-322FL / BM-322FR	2-p8
		BM-322FS	2-p9
		BMJ-322	2-p11
		BMF-322	2-p13
	Air Motor Spindle	MSS-22 SERIES	3-p31
ø0.897'' (ø22.8 mm)	Spindle	NR-2351 / NR-303	2-p31, 3-p6
		NR-311	2-p33, 3-p8
		RAS-101	2-p32, 3-p7
		RA-100 / RA-200	2-p32, 3-p7
		AMH-301	2-p33, 3-p8
		NR-601	3-p8
ø0.91'' (ø23 mm)	Air Motor Spindle	MSST-23 SERIES	3-p32
ø0.98'' (ø25 mm)	Electric Micro Spindle	BM-325	2-p9
		BMJ-325	2-p11
		BMF-325	2-p13
	Electric Motor Spindle	EM25-S6000	2-p48
	Spindle	NRR-2651	2-p23
		NR-2551	2-p23, 3-p14
	Air Motor Spindle	MSS-25 SERIES	3-p33
ø1.0'' (ø25.4 mm)	Spindle	NR-H2551	2-p23, 3-p14
	Air Motor Spindle	MSSH-25 SERIES	3-p33

Spindle Diameter	Type	Product Name	Page
ø1.18" (ø30 mm)	Brushless Motor Spindle	EMS-3060K	2-p44
		EMS-3060A	2-p44
		EMR-3008K	2-p45
		EMSF-3060K	2-p46
		EM30-S6000	2-p48
		EMA-3020K	2-p50
		EMA-3020S	2-p50
	Spindle	NR-3060S	2-p58, 3-p20
		NR-3080S	2-p75
		NR-453E	2-p58, 3-p20
		NR-403E	2-p59, 3-p21
		RAS-151E	2-p60, 3-p22
		RAX-271E / RAX-71E	2-p60, 3-p22
		RA-151E	2-p61, 3-p23
		RA-271E	2-p61, 3-p23
		NRR-3060	2-p63
		NR3060-AQC	2-p64
		NRR3060-QC	2-p65
ø1.57" (ø40 mm)	Spindle	NR40-5100 ATC	2-p62
		NR-4040	2-p83
		NR4040-AQC	2-p86
		NRR4040-QC	2-p87
	Brushless Motor Spindle	BMS-4020, BMS-4020 2M, BMS-4020RA, BMS-4040, BMS-4040 2M, BMS-4040RA	2-p81
	Brushless Coolant Through Motor Spindle	BMS-4040-MQL BMS-4040-MQL-2M	2-p84
	Air Bearing Spindle	Xpeed1600	4-p48
		ABT-1000	4-p52
ø1.97" (ø50 mm)	Spindle	NR50-5100 ATC	2-p62
		NR50-5100 ATC-RS	2-p62
		NRAF-5080	2-p75
ø2.56" (ø65 mm)	Air Bearing Spindle	Xpeed1200	4-p49

HAND TOOLS

1
EmaxEVO
ESPERT
ROTUS
IMPULSE
PRESTO II
Sheenus ZERO
2
iSpeed3
E2000
ø1.0"/ø0.98"/ø0.897"
E3000
– One Piece
E3000
– Modular
ø1.18"
ø1.0"/ø0.98"
ø0.897"
E3000
– 80,000rpm
E4000
3
MA
ø0.897"
ø1.0"
ø0.98"
ø1.18"
MS
ø0.75"
ø0.79"
ø0.87"
ø0.91"
ø1.0"
ø0.98"
4
HES
iSpeed5
HTS
HPS
PLANET
Xpeed
ABT
5
AIR LINE KIT
6
PARTS
7
TECHNICAL DATA
8
APPLICATION EXAMPLES
INDEX

Emax EVOlution

1,000–40,000 rpm

MODULAR TYPE BRUSHLESS MICRO GRINDER

- Digital display enhances safety and efficiency.
- Compact and functional design makes the controller portable.
- Soft touch switches permit easy operation and long service life.



ESPERT 500

1,000–50,000 rpm

MODULAR TYPE BRUSHLESS MICRO GRINDER

- High output power, 200W, and high reliability are achieved by combining a hall-element brushless DC motor and high grade electronics.



1
EmaxEVO
ESPERT
ROTUS
IMPULSE
PRESTO II
Sheenus ZERO
2
iSpeed3
E2000 ø1.0"/ø0.98"/ø0.897"
E3000 – One Piece
E3000 – Modular
ø1.18"
ø1.0"/ø0.98" ø0.897"
E3000 – 80,000rpm
E4000
3
MA
ø0.897"
ø1.0" ø0.98"
ø1.18"
MS
ø0.75" ø0.79"
ø0.87" ø0.91"
ø1.0" ø0.98"
4
HES
iSpeed5
HTS
HPS
PLANET
Xpeed
ABT
5
AIR LINE KIT
6
PARTS
7
TECHNICAL DATA
8
APPLICATION EXAMPLES
INDEX

Emax EVOlution System Chart

Product Code	Product Name		Attachment
RE11008	IR-310		Ring Type
40,000 rpm Max. (*1)	40,000 rpm Max. (*2)	Page 1-p8	
RE10178	IH-300		Lever Type
40,000 rpm Max. (*1)	40,000 rpm Max. (*2)	Page 1-p8	
2812	IG-400		Straight Type
40,000 rpm Max. (*1)	40,000 rpm Max. (*2)	Page 1-p8	
RE10188	HG-200		Torque Type (*3)
27,000 rpm Max. (*1)	27,000 rpm Max. (*2)	Page 1-p9	
RE10235	BMH-300		Long Type
35,000 rpm Max. (*1)	35,000 rpm Max. (*2)	Page 1-p9	
RE10247	MFC-300S		90° Mini Angle Type
15,000 rpm Max. (1)	15,000 rpm Max. (*2)	Page 1-p9	
RE10252	MFC-300M		90° Mini Angle Type (Very Small Head)
15,000 rpm Max. (*1)	15,000 rpm Max. (*2)	Page 1-p9	
RE10182	IC-300		90° Angle Type
35,000 rpm Max. (*1)	20,000 rpm Max. (*2)	Page 1-p10	
RE10266	KC-300		50° Angle Type
35,000 rpm Max. (*1)	20,000 rpm Max. (*2)	Page 1-p10	
LS10815	LS-100		LUSTER (Reciprocating motion)
30,000 rpm Max. (*1)	30,000 rpm Max. (*2)	Page 1-p12	
LS51307	ML-8		MINI-LUSTER (Reciprocating motion)
35,000 rpm Max. (*1)	30,000 rpm Max. (*2)	Page 1-p13	
LS11380	SLS-16		SWING-LUSTER (Right to Left motion)
35,000 rpm Max. (*1)	24,000 rpm Max. (*2)	Page 1-p13	
RE18060	HA-500		Hammer Action Type
20,000 rpm Max. (*1)	16,000 rpm Max. (*2)	Page 1-p16	
KBS61065	KBS-101		FINE BELT SANDER
35,000 rpm Max. (*1)	35,000 rpm Max. (*2)	Page 1-p16	



LUSTER
(Reciprocating motion)
Built-in Motor

1483	NLS-110	

30,000 rpm Max. (*1)
30,000 rpm Max. (*2)

- Wide selection of attachments available depending on the application.

Speed Reducer · Extension Joint



Extension Joint

RE10210	CN-01	

35,000 rpm Max. (*1)
35,000 rpm Max. (*2)



1/4 Speed Reducer

RO10214	RG-01	

30,000 rpm Max. (*1)
30,000 rpm Max. (*2)



1/15 Speed Reducer

RO10228	RG-02	

30,000 rpm Max. (*1)
30,000 rpm Max. (*2)

*May be connected between the motor and the attachment as required for increased torque.

*Maximum Allowable Speed, continuous use may change depending on the material being cut and other application variables.
*1 : Maximum Allowable Speed, intermittent use. *2 : Maximum Allowable Speed, continuous use. *3 :Use 6mm torque Type HG-200 to connect ENK-250T

Motor

Product Code	Product Name	

Controller

Product Code	Product Name	

• Emax EVOlution



8224 (120V)	NE249 120	



• Standard Type Motor with Cord
1,000~40,000 rpm Max.

8086	ENK-410S	



• Torque Type Motor with Cord
1,000~25,000 rpm Max.

8087	ENK-250T	

Optional



Coiled Cord : 4.5 ft
<with Switch>

8090	ENKCD-410C		for ENK-410S
8091	ENKCD-250C		for ENK-250T

- Digital display enhances safety and efficiency.
- Compact and functional design makes the controller portable.
- Soft touch switches permit easy operation and long service life.

New Advanced Design Controller

Advanced Control Function

Upgraded Digital Display.
EVOLUTION Speed Control with Flash Load Indicator.



Diversity for work efficiency

2 Motors A and B can be connected to cover multiple work requirements.

*Simultaneous motor operation is not allowable



Memory Speed Function FiXpeed®

An exclusive new feature of the Emax EVOlution is the FiXpeed® system allowing independent foot switch operation for the A and B Motors. A Motor foot switch can be on/off and B Motor foot switch can be variable speed. This function brings unprecedented versatility and workability.

Advanced User Friendly Design

New Industrial Design.
EVOLUTION new user friendly case meets design and performance requirements.



Auto Cruise Function

The controller is equipped with an Auto Cruise Function. While using foot control for work, anyone could fix the motor at any speed by the embedded motor switch.
Once speed is set, foot pedal control is not required. This function eliminates foot fatigue during operation.



Emax EVOlution Controller

Product Code	Product Name	Specifications	
8224 (120V)	NE249 120	• Weight : 5 lb. 1.13 oz. • Power Source : AC120V, 50-60Hz • Dimensions : W5.12" x D10.0" x H3.82"	

Accessories : Handpiece Holder : 1 pc., Handpiece Stand : 1 pc.
Power Supply Cord : 1 pc.

Ultra-Precision Micro Grinder



NAKANISHI Smart Switch

The switch provides a click sensation.
A confirmation tone is reacted by the controller when the switch is operated. The motor type is distinguishable by the switch color.



One Touch Tool Changing

- Ring Type (IR-310)
  Easy twist open/close chuck

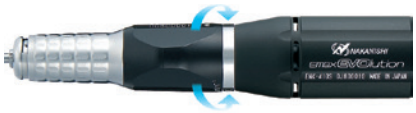

Various Collet Sizes

A variety of collet sizes ranging from 1.0 mm to 3.175 mm are available for most attachments.

Special Dust Protection Mechanism (patented)

The chuck section of Emax EVOlution has a special built-in dust protection mechanism that prevents entry of foreign materials such as chips, and provides superior durability as well.

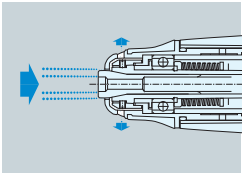

Emax EVOlution vs E-max Torque Characteristic

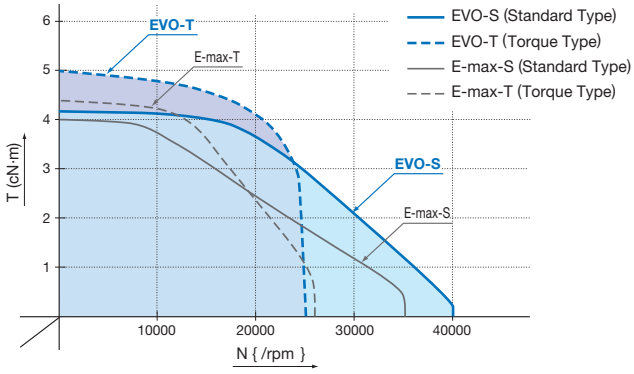

2 Types of Motors

Provides choice of various applications.

- Standard Type Motor 1,000~40,000 rpm (ENK-410S) Blue
- Torque Type Motor 1,000~25,000 rpm (ENK-250T) Green

***Exclusive use for Emax EVOlution**

Emax EVOlution and Electer E-max have different motor cord pin configurations.

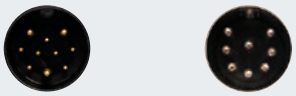

Emax EVOlution Electer E-max

Excellent Durability

- High performance brushless motor eliminates the need of changing carbon brushes.
- RPM variation is minimal even when load changes. Allowing difficult and stable cutting in stress free motion. Suitable performance for finish grinding.
- Provides superior quietness and smoothness from low speed to high speed.

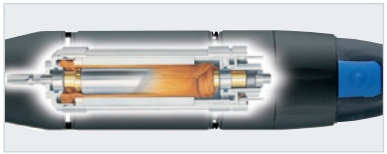

14 Types of Attachments for All Types of Applications

Capable of infinite applications with 14 different attachments.

*Interchangeable with attachments form the E-max and ROTUS system.

***Order by product code.**

Emax EVOlution RING TYPE STANDARD SET



Capabilities for a wide variety of applications. Excellent balance and motor power for smooth speed and handling.

1,000~40,000 rpm

Product Code 8231 (120V)	Product Name EV410-IR
Attachment IR-310 — Motor ENK-410S	
Standard Equipment	Micro Grinder (IR-310+ENK-410S) : 1 pc. Collet ø1/8" (CHH-3.175), ø2.35 mm (CHH-2.35) : 1 pc. each Controller (NE249 120) : 1 pc. Handpiece Holder : 1 pc. Handpiece Stand : 1 pc. Power Supply Cord : 1 pc. Wrench (7 x 5.1) : 1 pc. Pin Wrench (K-233) : 2 pcs. L Shaped Wrench (9) : 1 pc.

*Standard set with IH-300 is also available.
(Product Code 8222, Product Name EV410-IH)

Product Code 8222 (120V)	Product Name EV410-IH
Attachment IH-300 — Motor ENK-410S	
Standard Equipment	Micro Grinder (IR-310+ENK-410S) : 1 pc. Collet ø1/8" (CHH-3.175), ø2.35 mm (CHH-2.35) : 1 pc. each Controller (NE249 120) : 1 pc. Handpiece Holder : 1 pc. Handpiece Stand : 1 pc. Power Supply Cord : 1 pc. Wrench (7 x 5.1) : 1 pc. Pin Wrench (K-233) : 2 pcs. L Shaped Wrench (9) : 1 pc.

Emax EVOlution RING TYPE TORQUE SET



For heavy duty and larger tools, torque type extends to extend operation ranges.

1,000~25,000 rpm

Product Code 8232 (120V)	Product Name EV250-IR
Attachment IR-310 — Motor ENK-250T	
Standard Equipment	Micro Grinder (IR-310+ENK-250T) : 1 pc. Collet ø1/8" (CHH-3.175), ø2.35 mm (CHH-2.35) : 1 pc. each Controller (NE249 120) : 1 pc. Handpiece Holder : 1 pc. Handpiece Stand : 1 pc. Power Supply Cord : 1 pc. Wrench (7 x 5.1) : 1 pc. Pin Wrench (K-233) : 1 pc. L Shaped Wrench (9) : 1 pc.

Motor for Emax EVOlution (Electrically Driven)

- NAKANISHI Smart Switch.
- High performance samarium cobalt magnet.
- High accuracy, lightweight, compact, high reliability and superior durability.
- Major reduction of RF noise.
- Provides extremely quiet operation from low to high speed with stepless speed adjustment.

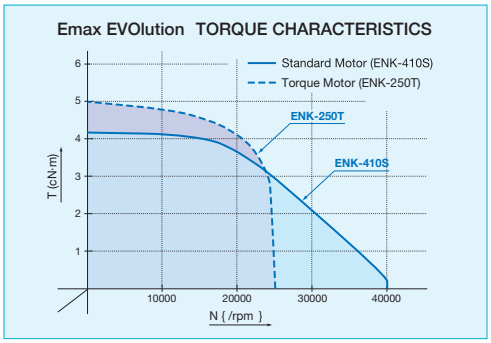

Motor Specifications

Motor Model	ENK-410S	ENK-250T
Speed	1,000~40,000 rpm	1,000~25,000 rpm
Weight (w/o Cord)	3.17 oz.	5.19 oz.
Max. Torque	4.3 cN·m	4.8 cN·m
Output Power	73W	76W

Product Code 8086 STANDARD TYPE MOTOR ENK-410S



1,000~40,000 rpm

- Excellent combination of high speed, lightweight, small diameter and high torque. This lightweight and compact general-use type is perfect for precision work.

Product Code	Product Name	Standard Accessories	
8086	ENK-410S	• Straight Cord : 4.5 ft • Pin Wrench (K-233) : 1 pc.	

Product Code 8087 TORQUE TYPE MOTOR ENK-250T



1,000~25,000 rpm

- Combines the best of both high speed and high torque. It is perfect for applications requiring large burs.

Product Code	Product Name	Standard Accessories	
8087	ENK-250T	• Straight Cord : 4.5 ft	

Product Code RE11008 RING TYPE ATTACHMENT IR-310

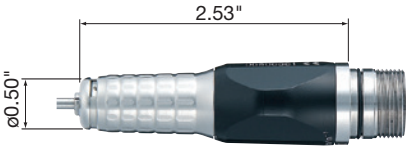

40,000 rpm Max. (*1)
40,000 rpm Max. (*2)



- Perfectly designed for powerful and delicate cutting and grinding, and made slim and light weight for comfortable gripping.

- Weight : 3.25 oz.
- Simple, no wrench bur replacement.
- Wrench is not required to exchange the chuck.
- Collet
  Standard Size : ø1/8" (CHH-3.175), ø2.35 mm (CHH-2.35)
  Optional Collets : CHH-[][] are shown in page (6-p2)

Ring Type Attachment

Product Code	Product Name	Standard Accessories	
RE11008	IR-310	• Collet ø1/8" (CHH-3.175), ø2.35 mm (CHH-2.35) : 1 pc. each • Wrench (7 x 5.1) : 1 pc. • Pin Wrench (K-233) : 1 pc. • L Shaped Wrench (9) : 1 pc.	

Product Code RE10178 LEVER TYPE ATTACHMENT IH-300



40,000 rpm Max. (*1)
40,000 rpm Max. (*2)



- Perfectly designed for powerful and delicate cutting and grinding, and made slim and light weight for comfortable gripping.

- Weight : 2.19 oz.
- Just turn the lever to exchange the bur.
- Wrench is not required to exchange the chuck.
- Collet
  Standard Size : ø1/8" (CHH-3.175), ø2.35 mm (CHH-2.35)
  Optional Collets : CHH-[][] are shown in page (6-p2)

Lever Type Attachment

Product Code	Product Name	Standard Accessories	
RE10178	IH-300	• Collet ø1/8" (CHH-3.175), ø2.35 mm (CHH-2.35) : 1 pc. each • Wrench (7 x 5.1) : 1 pc. • Pin Wrench (K-233) : 1 pc.	

Product Code 2812 STRAIGHT TYPE ATTACHMENT IG-400

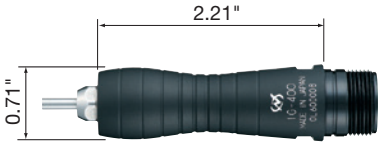

40,000 rpm Max. (*1)
40,000 rpm Max. (*2)



- Light weight ergonomically designed with minimal vibration for extended use.
- High precision NK Micron Collet for maximum tool retention.

- Weight : 1.94 oz.
- Collet
  Standard Size : ø1/8" (NKM6-3.175)
  Optional Collets : NKM6-[][] are shown in page (6-p6)

Straight Type Attachment

Product Code	Product Name	Standard Accessories	
2812	IG-400	• Collet ø1/8" (NKM6-3.175) : 1 pc. • Collet Nut (CHN-6) : 1 pc. • Wrench (9 x 9), (15 x 17) : 1 pc. each • Bar Wrench (PCR-30) : 1 pc.	

Product Code RE10188 TORQUE TYPE ATTACHMENT HG-200

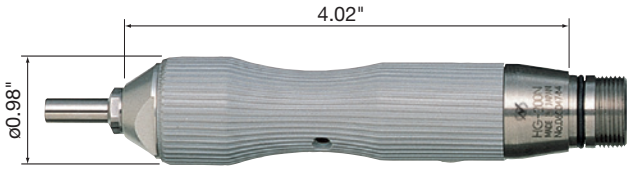

27,000 rpm Max. (*1)
27,000 rpm Max. (*2)



- The resistance produced by cutting and grinding is absorbed by a special rubber grip to eliminate slipping.

- Chuck is tightened by a Wrench.
- Weight : 7.41 oz.
- Collet
  Standard Size : ø1/4" (CHG-6.35)
  Optional Collets : CHG-[][] are shown in page (6-p2)

Torque Type Attachment *Use 6mm torque Type HG-200 to connect ENK-250T *Please use it with Speed Reducer. (ROTUS Air Motor)

Product Code	Product Name	Standard Accessories	
RE10188	HG-200	• Collet ø1/4" (CHG-6.35) : 1 pc. • Wrench (10 x 10) : 1 pc. • Bar Wrench (K-212) : 1 pc. • Pin Wrench (K-233) : 1 pc.	

Product Code RE10235 For Deep Hole Grinding LONG ATTACHMENT BMH-300

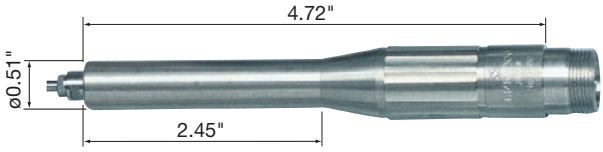

35,000 rpm Max. (*1)
35,000 rpm Max. (*2)

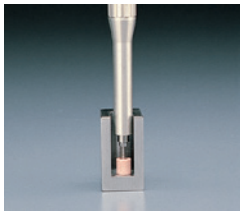

- This unique slim body makes it ideal for cutting and grinding the bottom surface of deep ribs or holes.

- Weight : 5.50 oz.
- Wrench is not required to exchange the chuck.
- Collet
  Standard Size : ø1/8" (CHM-3.175)
  Optional Collets : CHM-[][] are shown in page (6-p4)

Long Attachment for Deep Hole Grinding

Product Code	Product Name	Standard Accessories	
RE10235	BMH-300	• Collet ø1/8" (CHM-3.175) : 1 pc. • Wrench (7 x 5.1), (6 x 4.5) : 1 pc. each • Pin Wrench (K-233) : 1 pc.	

Product Code RE10247 For Chamfering Deep Hole 90° MINI ANGLE TYPE ATTACHMENT MFC-300S



15,000 rpm Max. (*1)
15,000 rpm Max. (*2)

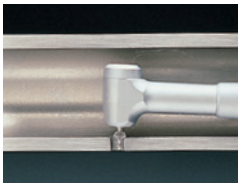

- Ideal for chamfering and deburring the inside of slit pipe.

- Minimum Inner Diameter : ø0.79"
- Weight : 1.76 oz.
- Standard Collet : ø1.6 mm (K-252)
- Speed Reduction Ratio : 10/11

90° MINI ANGLE TYPE Attachment for Chamfering Deep Hole, Bur Only ø1.6 mm *Please use it with Speed Reducer. (ROTUS Air Motor)

Product Code	Product Name	Standard Accessories	
RE10247	MFC-300S	• Collet ø1.6 mm (K-252) : 1 pc. • Chuck Wrench (K-232) : 1 pc. • Pin Wrench (K-233) : 1 pc.	

Product Code RE10252 For Chamfering Deep Hole 90° MINI ANGLE TYPE ATTACHMENT MFC-300M



15,000 rpm Max. (*1)
15,000 rpm Max. (*2)

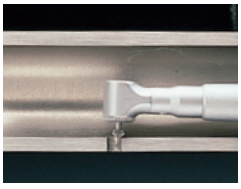

- The smallest 90° Angle type head is suitable for chamfering and deburring the inside of the slit pipe.

- Minimum Inner Diameter : ø0.51"
- Weight : 1.66 oz.
- Standard Collet : ø1.6 mm (K-253)
- Speed Reduction Ratio : 10/11

90° MINI ANGLE TYPE Attachment for Chamfering Deep Hole, Bur Only ø1.6 mm (Very Small Head) *Please use it with Speed Reducer. (ROTUS Air Motor)

Product Code	Product Name	Standard Accessories	
RE10252	MFC-300M	• Collet ø1.6 mm (K-253) : 1 pc. • Chuck Wrench (K-232) : 1 pc. • Pin Wrench (K-233) : 1 pc.	

*Maximum Allowable Speed, continuous use may change depending on the material being cut and other application variables.

*1 : Maximum Allowable Speed, intermittent use.
*2 : Maximum Allowable Speed, continuous use.

***Order by product code.**

Product Code RE10182 90°ANGLE ATTACHMENT IC-300



35,000 rpm Max. (*1)
20,000 rpm Max. (*2)

Drive Motor & Controller

Electric Motor (ENK-410S) (ENK-250T) Page 1-p7
Emax EVOlution Controller (NE249 120) Page 1-p4
or
Air Motor (IM-301) Page 1-p33
ROTUS Air Line Kit (AL-H1207F) & AFC-45 Page 5-p2

● 90˚Angle attachment with ø1/8" (ø3.175 mm) Collet. Most suitable for polishing flat surfaces, corners and internal surfaces of pipes with paper disk mounted on rubber pad.

- Reduction Ratio : 3/4
- Weight : 1.59 oz.
- Collet
  Standard Size : ø1/8" (CHC-3.175)
  Optional Collets : CHC-[][] are shown in page (6-p2)

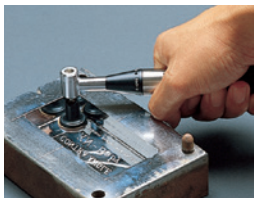

90° Angle Attachment

*Please use it with Speed Reducer. (ROTUS Air Motor)

Product Code	Product Name	Standard Accessories	
RE10182	IC-300	• Collet ø1/8" (CHC-3.175) : 1 pc. • Standard Accessories : 1 set • Chuck Wrench (K-231) : 1 pc. • Pin Wrench (K-233) : 1 pc.	

Product Code RE10266 50°ANGLE ATTACHMENT KC-300



35,000 rpm Max. (*1)
20,000 rpm Max. (*2)

Drive Motor & Controller

Electric Motor (ENK-410S) (ENK-250T) Page 1-p7
Emax EVOlution Controller (NE249 120) Page 1-p4
or
Air Motor (IM-301) Page 1-p33
ROTUS Air Line Kit (AL-H1207F) & AFC-45 Page 5-p2

● Ideal for the work at 50˚angle, especially corners and deep concaves.

- Use the motor in reverse rotation for clockwise rotation.
- Speed Reduction Ratio : 3/4
- Weight : 1.59 oz.
- Collet
  Standard Size : ø1/8" (CHC-3.175)
  Optional Collets : CHC-[][] are shown in page (6-p2)

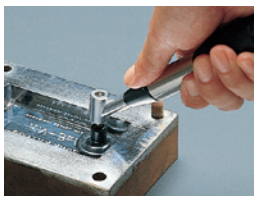

50° Angle Attachment

*Please use it with Speed Reducer. (ROTUS Air Motor)

Product Code	Product Name	Standard Accessories	
RE10266	KC-300	• Collet ø1/8" (CHC-3.175) : 1 pc. • Standard Accessories : 1 set • Chuck Wrench (K-231) : 1 pc. • Pin Wrench (K-233) : 1 pc.	

Standard Accessories for IC-300 and KC-300

Description		Product Code	Product Name	O.D.	Grits	Q'ty
Rubber Pad	(Small)	RE11915	— —	ø 10mm (ø 0.39")	–	1
	(Med)	RE11916	— —	ø 20mm (ø 0.79")	–	1
	(Large)	RE11917	— —	ø 30mm (ø 1.18")	–	1
Sandpaper Disk		LS10904	S-018	ø 11mm (ø 0.43")	# 180	5
		LS10910	S-060	ø 11mm (ø 0.43")	# 600	5
		RE11804	M-018	ø 21mm (ø 0.83")	# 180	5
		RE11810	M-060	ø 21mm (ø 0.83")	# 600	5
		RE11904	L-018	ø 31mm (ø 1.22")	# 180	5
		RE11910	L-060	ø 31mm (ø 1.22")	# 600	5

*Maximum Allowable Speed, continuous use may change depending on the material being cut and other application variables.

*1 : Maximum Allowable Speed, intermittent use.
*2 : Maximum Allowable Speed, continuous use.

Optional Accessories for IC-300 and KC-300

Rubber Pad

Product	Description	Product Code	Product Name	O.D.	Grits	package	
	Rubber Pad (Small)	RE11915	64105	ø10 mm (ø0.39")	–	1 pc./pack	
	Rubber Pad (Med)	RE11916	64106	ø20 mm (ø0.79")	–	1 pc./pack	
	Rubber Pad (Large)	RE11917	64107	ø30 mm (ø1.18")	–	1 pc./pack	

Sandpaper Disk (Paper Type for Metals, Adhesive Back)

Product	Description	Product Code	Product Name	O.D.	Grits	package	
	Sandpaper Disk for small pad	LS10900	S-008	ø11 mm (ø0.43")	# 80	100 pcs./pack	
		LS10902	S-012		# 120		
		LS10904	S-018		# 180		
		LS10905	S-024		# 240		
		LS10906	S-032		# 320		
		LS10908	S-040		# 400		
		LS10910	S-060		# 600		
		LS10912	S-080		# 800		
		LS10914	S-100		#1,000		
		LS10915	S-150		#1,500		
	Sandpaper Disk for med. pad	RE11800	M-008	ø21 mm (ø0.83")	# 80		
		RE11802	M-012		# 120		
		RE11804	M-018		# 180		
		RE11805	M-024		# 240		
		RE11806	M-032		# 320		
		RE11808	M-040		# 400		
		RE11810	M-060		# 600		
		RE11812	M-080		# 800		
		RE11814	M-100		#1,000		
		RE11815	M-150		#1,500		
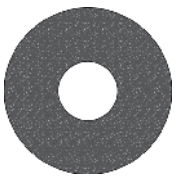	Sandpaper Disk for large pad	RE11900	L-008	ø31 mm (ø1.22")	# 80		
		RE11902	L-012		# 120		
		RE11904	L-018		# 180		
		RE11905	L-024		# 240		
		RE11906	L-032		# 320		
		RE11908	L-040		# 400		
		RE11910	L-060		# 600		
		RE11912	L-080		# 800		
		RE11914	L-100		#1,000		
		RE11925	L-150		#1,500		

*Order by product code.

The Features of LUSTER Emax EVOlution NLS-110 (Built-in Motor)

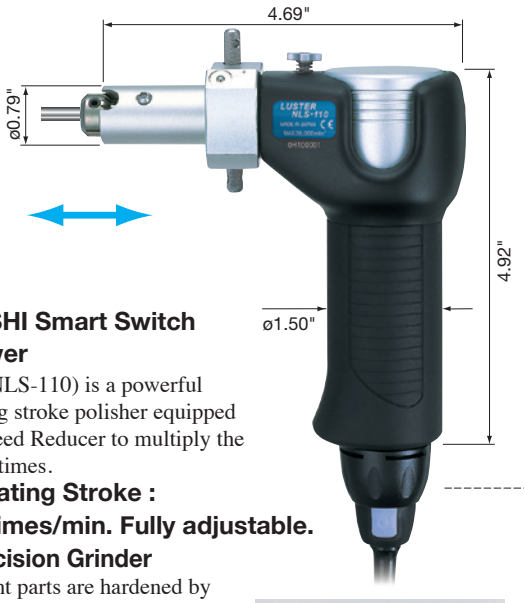

- **NAKANISHI Smart Switch**
- **High Power**
  LUSTER (NLS-110) is a powerful reciprocating stroke polisher equipped with 1/4 Speed Reducer to multiply the torque by 4 times.
- **Reciprocating Stroke : 0~7,600 times/min. Fully adjustable.**
- **Ultra-Precision Grinder**
  All important parts are hardened by heat treatment to provide excellent durability.
- **Designed with comfortable rubber-grip**
  Well balanced, rubber-grip absorbs vibration from reciprocating strokes reducing fatigue and allowing long, continuous operation.



●Stroke Range : 0~6 mm adjustable by stroke cam

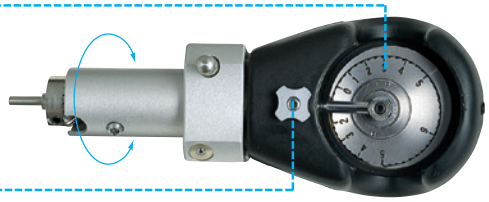

●The tilt angle of grindstone arbor is adjustable.
The grinding surface can be set at any angle between 0 and 360° enabling grinding of bottom, right, left and top surfaces without moving the machine itself.

Controller



Emax EVOlution Controller (NE249 120)
Page 1-p4

- Weight : 1 lb. 12.22 oz. (w/o cord)
- Max. tool shank diameter ø0.25", Screw clamp type.
- Various types of attachment tools are provided as standard accessories.

Reciprocating Motion Polishing Finisher LUSTER

Product Code	Product Name	Standard Accessories	
1483	NLS-110	• Standard Accessories : 1 set • Allen Wrench (2 mm), (3 mm) : 1 pc. each • Lubrication Oil • Lubrication Nozzle for LUSTER	

30,000 rpm Max. (*1) 30,000 rpm Max. (*2)

The Features of LUSTER LS-100



- **High Power**
  LUSTER (LS-100) is a powerful reciprocating stroke polisher.
- **Reciprocating Stroke : 0~7,600 times/min. Fully adjustable.**
- **Ultra-Precision Grinder**
  All important parts are hardened by heat treatment to provide excellent durability.
- **Designed with comfortable rubber-grip**
  Well balanced, rubber-grip absorbs vibration from reciprocating strokes reducing fatigue and allowing long, continuous operation.



●Stroke Range : 0~6 mm adjustable by stroke cam

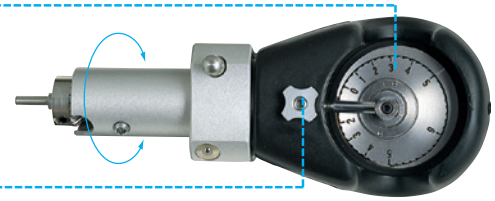

●The tilt angle of grindstone arbor is adjustable.
The grinding surface can be set at any angle between 0 and 360° enabling grinding of bottom, right, left and top surfaces without moving the machine itself.

Drive Motor & Controller



Electric Motor (ENK-410S) (ENK-250T)
Page 1-p7



Emax EVOlution Controller (NE249 120)
Page 1-p4

or



Air Motor (IM-301)
Page 1-p33



ROTUS Air Line Kit (AL-H1207F) & AFC-45
Page 5-p2

- Weight : 1 lb. 7.99 oz.
- Max. tool shank diameter ø0.25", Screw clamp type.
- Various types of attachment tools are provided as standard accessories.

Reciprocating Motion Miniature Polisher LUSTER

Product Code	Product Name	Standard Accessories	
LS10815	LS-100	• Standard Accessories : 1 set • Allen Wrench (2 mm), (3 mm) : 1 pc. each • Lubrication Oil • Lubrication Nozzle for LUSTER	

30,000 rpm Max. (*1) 30,000 rpm Max. (*2)

The Features of MINI-LUSTER ML-8



Drive Motor & Controller



Electric Motor (ENK-410S) (ENK-250T) Page 1-p7

Emax EVOlution Controller (NE249 120) Page 1-p4

or



Air Motor (IM-301) Page 1-p33

ROTUS Air Line Kit (AL-H1207F) & AFC-45 Page 5-p2

- **Reciprocating Stroke (variable) : Approx 0~9,000 times/min.**
- **Stroke Range (fixed) : 0.8 mm.**
- **Due to pencil type grip, it is most suitable for polishing narrow grooves, details, etc.**
- **Lightweight, compact design and minimal vibration keep the hand free from fatigue for long continuous operation.**
- **By using the grindstone holder provided, various tools such as oil stone, super stone, diamond files, etc. can be used.**

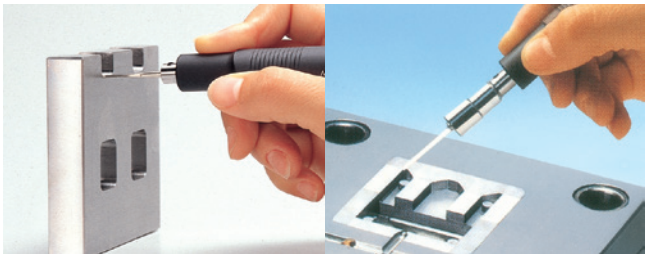

- Weight : 5.12 oz.
- Max. tool shank diameter ø0.13", Screw clamp type.
- Various attachment tools and holders are provided as standard accessories.

Pencil-Type Reciprocating Polishing Finisher MINI-LUSTER Attachment

Product Code	Product Name	Stroke Range	Standard Accessories	
LS51307	ML-8	0.8mm	• Allen Wrench (1.5 mm) : 1 pc. • Standard Accessories : 1 set	

35,000 rpm Max. (*1) 30,000 rpm Max. (*2)

The Features of SWING-LUSTER SLS-16



Drive Motor & Controller



Electric Motor (ENK-410S) (ENK-250T) Page 1-p7

Emax EVOlution Controller (NE249 120) Page 1-p4

or



Air Motor (IM-301) Page 1-p33

ROTUS Air Line Kit (AL-H1207F) & AFC-45 Page 5-p2

- **High speed grinding and polishing operations can be performed while maintaining the fine and delicate feeling of hand polishing.**
- **Lightweight pencil type design makes it easy to work in tight areas.**
- **Ergonomically designed to provide high sensitivity for precision work.**
- **Easily adjustable stroke length allows efficient work on minute areas or large sections.**

- Weight : 5.00 oz. • Reciprocating Stroke (variable) : 0~9,000 times/min
- Stroke range (variable) : 0~1.6 mm
- Max. tool shank diameter ø0.20", Screw clamp type.

Pencil-Type Reciprocating Polishing Finisher SWING-LUSTER Attachment

Product Code	Product Name	Standard Accessories	
LS11380	SLS-16	• Wrench (16 x 18), (20 x 24) : 1 pc. each • Allen Wrench (1.5 mm) : 1 pc. • Standard Accessories : 1 set	

35,000 rpm Max. (*1) 24,000 rpm Max. (*2)

*Please use it with Speed Reducer. (ROTUS Air Motor)

*Maximum Allowable Speed, continuous use may change depending on the material being cut and other application variables.

*1 : Maximum Allowable Speed, intermittent use.
*2 : Maximum Allowable Speed, continuous use.

Tool and standard accessories for LUSTER, MINI-LUSTER, SWING-LUSTER

• Each product is provided with tool ● as standard.

Product	Product Code	Product Name	(Package)	LUSTER NLS-110 / LS-100 ELS-100	MINI-LUSTER ML-8 / EML-8	SWING-LUSTER SLS-16
Max. clampable size : Thickness 0.18" x width 0.43" 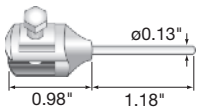	LS10875	Grindstone Holder VES	(1 pc./pack)	● (1 pc.)		
Max. clampable size : Thickness 0.43" x width 0.53" 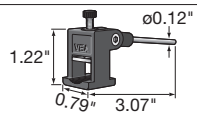	LS10834	Grindstone Holder VEA	(1 pc./pack)	● (1 pc.)		
[4] 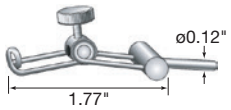	LS10867	Tool Holder with Spring FVA	(1 pc./pack)	● (1 pc.)	● (1 pc.)	
[1] 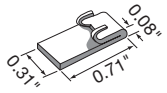	LS10891	Rectangular Pad LKE-2A	(1 pc./pack)	● (1 pc.)		
[2] 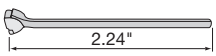	LS10848	Rod for Rectangular Pad FBA-2	(1 pc./pack)	● (1 pc.)		
[3] 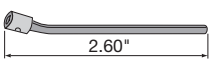	LS10853	Angle Rod NGA	(1 pc./pack)	● (1 pc.)		
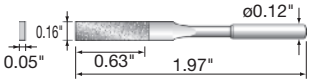	LS10918	62814	(1 pc./pack)		● (1 pc.)	● (1 pc.)
Max. clampable size : Thickness 0.04" x width 0.24" 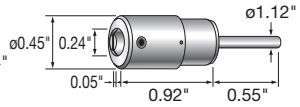	62510	Ceramic Fiber Grindstone Holder	(1 pc./pack)		● (1 pc.)	● (1 pc.)
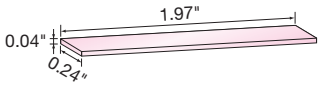	60737	Ceramic Fiber Grindstone (#1,200)	(2 pcs./pack)		● (1 pc.)	● (1 pc.)

● Illustration Usage

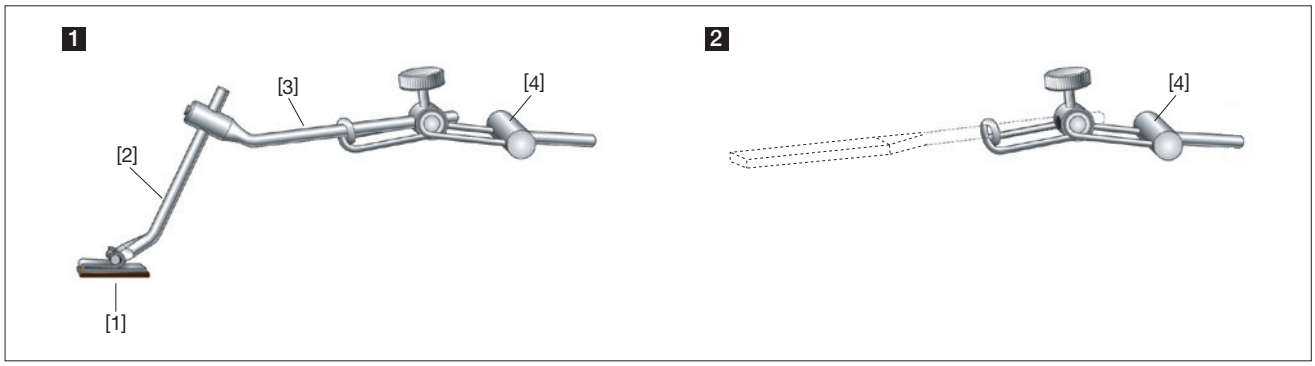

*Order by product code.

memo

1
EmaxEVO
ESPERT
ROTUS
IMPULSE
PRESTO II
Sheenus ZERO
2
iSpeed3
E2000
ø1.0"/ø0.98"/ø0.897"
E3000
– One Piece
E3000
– Modular
ø1.18"
ø1.0"/ø0.98"
ø0.897"
E3000
– 80,000rpm
E4000
3
MA
ø0.897"
ø1.0"
ø0.98"
ø1.18"
MS
ø0.75"
ø0.79"
ø0.87"
ø0.91"
ø1.0"
ø0.98"
4
HES
iSpeed5
HTS
HPS
PLANET
Xpeed
ABT
5
AIR LINE KIT
6
PARTS
7
TECHNICAL DATA
8
APPLICATION EXAMPLES
INDEX

The Features of HA-500

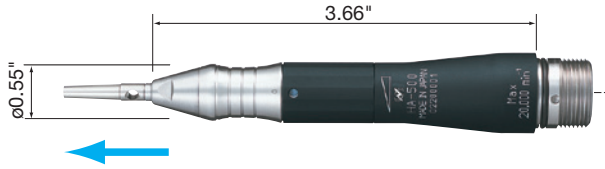

Drive Motor & Controller

Electric Motor (ENK-410S) (ENK-250T) Page 1-p7

Emax EVOlution Controller (NE249 120) Page 1-p4

or

Air Motor (IM-301) Page 1-p33

ROTUS Air Line Kit (AL-H1207F) & AFC-45 Page 5-p2

- **Stroke speed : 25~5,000 strokes/min**
- **A wide variety of patterns can be produced by varying the spring pressure and hammer speed.**
- **Light weight, pencil type grip makes the handpiece very comfortable to hold and easy to use.**
- **Adjustable spring pressure.**
- **Self lubricating hammer mechanism ensure excellent durability.**

• Weight : 3.35 oz.
• Stroke range : 0.4 mm • Stroke Spring Pressure : 4.4~7.1N (Ring Adjustment Type)

Engraving and Ornament Processing Work Hammer Attachment

Product Code	Product Name	Standard Accessories	
RE18060	HA-500	• Wrench (7 x 5.5) : 1 pc. • Bar Wrench (K-212) : 1 pc. • Oil and Oil offer machine • Hammer Bit (For replacement) : 2 pcs.	

20,000 rpm Max. (*1) 16,000 rpm Max. (*2)
*Please use it with Speed Reducer. (ROTUS Air Motor)

Hammer Bit to be machined to required shapes (SUS-420, heat treated, approx, HRC50)

Product	Product Code	Package	
	65301	3 pcs./pack	

The Features of FINE BELT SANDER KBS-101

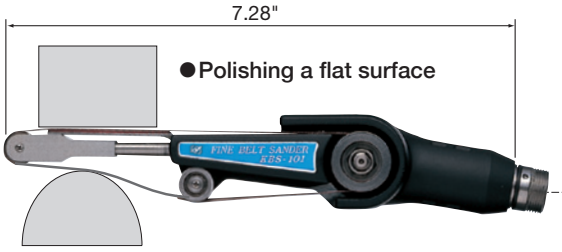

Drive Motor & Controller

Electric Motor (ENK-410S) (ENK-250T) Page 1-p7

Emax EVOlution Controller (NE249 120) Page 1-p4

or

Air Motor (IM-301) Page 1-p33

ROTUS Air Line Kit (AL-H1207F) & AFC-45 Page 5-p2

- **Belt runs Approx. 0~2,700 ft/min**
- **8 mm, 6 mm and 4 mm width belts are available.**
- **The angle of the belt section is fully adjustable.**
- **Exchanging the belt is simply done by lever release.**
- **Weight : 12.35 oz.**

- Light-weight, compact, minimal vibration and a small diameter grip design keep the hand free from fatigue for long, continuous operation.
- When polishing a curved surface, the tension between the front and central pulley can be utilized. When polishing a flat surface or a groove, use the flat part of belt.



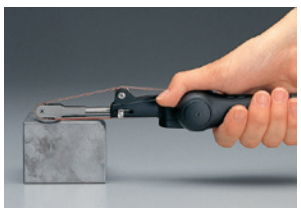

FINE BELT SANDER Attachment

Product Code	Product Name	Standard Accessories	
KBS61065	KBS-101	• 8 mm Belt (3 kinds 2 pcs. each) • 6 mm Belt (3 kinds 2 pcs. each) • 4 mm Belt (3 kinds 2 pcs. each) • Allen Wrench (3 mm) : 1 pc.	

35,000 rpm Max. (*1) 35,000 rpm Max. (*2)

*Maximum Allowable Speed, continuous use may change depending on the material being cut and other application variables.

*1 : Maximum Allowable Speed, intermittent use.
*2 : Maximum Allowable Speed, continuous use.

Belt for FINE BELT SANDER

Product	Description	Product Code	Grit	Width (mm)	Length (mm)	Package	
 W	Abrasive Belt	64901	# 80	4	300	30 pcs./pack	
		64902	# 120				
		64903	# 180				
		64904	# 240				
		64905	# 320				
		64906	# 400				
		64911	# 80	6			
		64912	# 120				
		64913	# 180				
		64914	# 240				
		64915	# 320				
		64916	# 400				
		64921	# 80	8			
		64922	# 120				
		64923	# 180				
		64924	# 240				
		64925	# 320				
		64926	# 400				
		64927	# 600				
		64928	# 800				
	Abrasive Belt for Wood	64941	# 80				
		64942	# 120				
		64943	# 240				
 8 mm	Zirconia Belt	64971	# 80	8	300	30 pcs./pack	
		64972	# 100				
		64973	# 120				
 8 mm	Diamond Belt (Hard Type)	65011	# 80	8	300	3 pcs./pack	
		65012	# 120				
		65014	# 240	8	300	3 pcs./pack	
		65015	# 320				
		65017	# 600				
 8 mm	Diamond Belt (Soft Type)	65021	# 120	8	300	3 pcs./pack	
		65022	# 180				
		65023	# 240				
		65024	# 320	8	300	3 pcs./pack	
		65028	# 400				
		65025	# 600				
		65026	# 800				
		65027	#1,000				

*Order by product code.

Product Code RO10214 SPEED REDUCER RG-01



TORQUE UP 4 TIMES
(1/4 Speed Reducer)

- The speed is reduced to 1/4 but the torque is multiplied by 4 times.
- Weight : 2.40 oz.

30,000 rpm Max. (*1) 30,000 rpm Max. (*2)

Speed Reducer (1/4)

Product Code	Product Name	Standard Accessories	
RO10214	RG-01	• Pin Wrench (K-233) : 1 pc.	

Product Code RO10228 SPEED REDUCER RG-02



TORQUE UP 15 TIMES
(1/15 Speed Reducer)

- The speed is reduced to 1/15 but the torque is multiplied by 15 times.
- Weight : 3.28 oz.

30,000 rpm Max. (*1) 30,000 rpm Max. (*2)

Speed Reducer (1/15)

Product Code	Product Name	Standard Accessories	
RO10228	RG-02	• Pin Wrench (K-233) : 1 pc.	

Product Code RE10210 EXTENSION JOINT CN-01



(Speed 1 : 1)

- This is a joint to be connected between a motor and an attachment to extend the total length of the attachment.
- Weight : 2.93 oz.

35,000 rpm Max. (*1) 35,000 rpm Max. (*2)

Extension Joint (Speed 1 : 1)

Product Code	Product Name	Standard Accessories	
RE10210	CN-01	• Pin Wrench (K-233) : 1 pc.	

Product Code 8106 FOOT PEDAL FC-64



- Used as an ON/OFF switch as well as a variable speed control.

Foot Pedal

Product Code	Product Name	Fit to	
8106	FC-64	Emax EVOlution (NE249)	

*Maximum Allowable Speed, continuous use may change depending on the material being cut and other application variables.

*1 : Maximum Allowable Speed, intermittent use.
*2 : Maximum Allowable Speed, continuous use.

Common Tools for LUSTER, MINI-LUSTER

Product	Product Code	Description · Product Name	
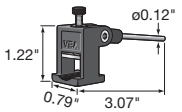	LS10834	Grindstone Holder VEA for (W 0.53" x T 0.43")	
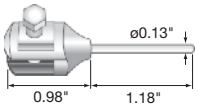	LS10875	Grindstone Holder VES for (W 0.43" x T 0.18")	
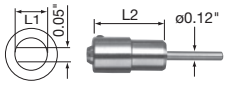	Z094005 Z094006 Z094007	Holder for Super Stone SH-10 (L1=0.40") (L2=1.10") SH-6 (L1=0.24") (L2=0.92") SH-4 (L1=0.16") (L2=0.87")	
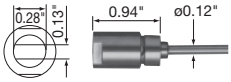	Z095008	Oil Stone Lapping Stick Holder for (W 0.24" x T 0.12")	
[4] 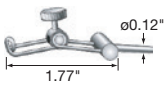	LS10867	Tool Holder with Spring FVA	
[3] 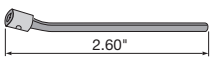	LS10853	Angle Rod NGA	
[2] 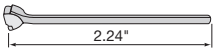	LS10848	Rod for Lapping FBA-2	
[1] 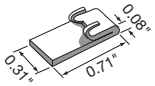	LS10891	LKE-2A with Hinge Use with FBA-2	

Product	Product Code	Description · Product Name	
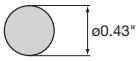 Sandpaper Disk	LS10900	S-008 # 80	100 pcs. Package
	LS10902	S-012 # 120	
	LS10904	S-018 # 180	
	LS10905	S-024 # 240	
	LS10906	S-032 # 320	
	LS10908	S-040 # 400	
	LS10910	S-060 # 600	
	LS10912	S-080 # 800	
	LS10914	S-100 # 1,000	
	LS10915	S-150 # 1,500	
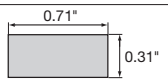 Sandpaper	LS10919	K-012 # 120	100 pcs. Package
	LS10923	K-032 # 320	
	LS10927	K-060 # 600	
	LS10931	K-100 # 1,000	
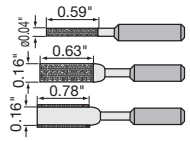	LS10963	DLA-1-100	
	LS10918	DLA4 x 1-100	
	LS10922	DLA1 x 4-100	

[1]~[4] : Please See Page 1-p14 for Illustration Usage.

● **Evolutionary New Design High-Performance Brushless Micro Grinder.**

Ultra-Precision Micro Grinder

The Espert 500 brushless motor takes motor technology to an even higher level. The new state of the art motor has dramatically increased efficiency and torque output. The microprocessor based controller provides optimal control of the motors and allows for increased flexibility in this multi-function system.

Speed : 1,000~50,000 rpm

Speed is steplessly variable from 1,000~50,000 rpm. Smooth and powerful torque is delivered at both high and low speeds. The extremely high maximum speed of 50,000 rpm allows high precision micro-machining.

2 Types of Motors

Very high torque from compact motors.

		NAKANISHI Smart Switch Color
• Compact Type (ENK-500C)	140W	Blue
• Torque Type (ENK-500T)	200W	Gray

NAKANISHI Smart Switch

The switch provides a click sensation and a confirmation tone is produced by the controller when the switch is operated. The motor type is distinguishable by the switch color.

NAKANISHI Smart Switch



Excellent Durability

High performance brushless motor eliminates the need to change carbon brushes. NAKANISHI's internal load test has proven continuous use for more than 5,000 hours.

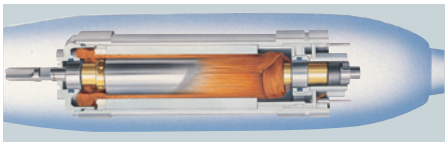

High Precision

NAKANISHI's ultra-precision technology ensures bur concentricity of 0.02 mm (0.0008") or less, which allows for very high precision finishing.

Simple Screw on Attachments



Low Noise, Low Vibration

The brushless motor and incorporated cooling fan have reduced the vibration and noise levels, resulting in a quieter, more comfortable work environment.
Dramatically compared with conventional grinders.

Special Dust-Proof Mechanism

The handpiece has a patented built-in-dust protection system to prevent the infiltration of dust and debris into the front bearings. This NAKANISHI patented design assures long-term durability.

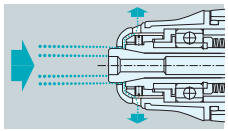

9 Types of Attachments Available

9 different types of attachments making an almost infinite number of applications possible.

Wide Range of Collets Available

A variety of collet sizes ranging from 1.0 mm to 3.175 mm are available for most attachments.

Micro Grinder & Handpiece Stand

This specially designed micromotor stand allows easy pick-up and set-down of the micro grinder. Strong, but soft to the touch, the micro grinder stand contains convenient, integrated storage compartments for adjustment wrenches and a spare chuck.





New Advanced Design Controller

Optimal Control via Microcomputer

The operation of all Espert 500 functions is controlled by a high performance microcomputer (CPU) that is programmed with NAKANISHI's proprietary technology. NAKANISHI's CPU has direct control of the brushless micro grinder allowing smooth and highly precise cutting and polishing of a wide variety of materials. Bur "chatter" has been eliminated. The system automatically senses which micromotor is attached (ENK-500C or ENK-500T) and self adjusts to provide optimum micro grinder performance.

Eco-Friendly Design

The electronic circuits are designed using NAKANISHI's proprietary technology to meet eco-friendly expectations by minimizing power consumption. Since power demands are minimal, no significant heat is generated and no cooling fan is required.

Auto Cruise Function

The controller is equipped with an auto cruise function that operates the micro grinder at a preset speed without the need to use the foot pedal. This function eliminates foot fatigue during prolonged operation.

Memory Speed Function FiXpeed®

An exclusive new feature of the Espert 500 system, the FiXpeed® system allows the user to independently preset the speed of motor A and motor B. For example motor A can be set to maintain the speed set by the FiXpeed® system while motor B has variable control using a foot pedal. This function allows for unprecedented flexibility.

Simplified Hand and Foot Pedal Control

You no longer need to push a switch on the controller to switch between hand and foot pedal control. If you want to operate the motor handpiece by hand simply push the NAKANISHI Smart Switch, if you want to use foot pedal control simply depress the foot pedal.

A/B 2 Motors Can Be Connected

High Quality Metallic Silver Body

Other Features

- Self Check Function (Maintenance Mode)
- Smooth Operation
- Operation Check Sound
- Highly Visible and easy to operate front panel
- 2-Digit Digital Display
- Error Code Display Function



ESPERT 500 Controller

Product Code	Product Name	Specifications	
ES9087	NE96	• Power Source : AC120V, 50-60Hz • Dimensions : W6.77" x D9.06" x H3.70" • Weight : 5 lb. 11.71 oz. • Accessories : Handpiece Stand : 1 pc. Handpiece Holder : 1 pc.	

Espert 500 Standard Set (Ring Type)



- High Power System. Max. Output 140W
- Speed Range : 1,000~50,000 rpm
- Microprocessor controlled for optimal motor control
- Hand Switch [NAKANISHI Smart Switch]
- Memory Speed Function [FiXpeed®]

Product Code ES9085	Product Name ES50C-HR
Attachment EHR-500 — Motor ENK-500C — Controller NE96	
Standard Accessories	Controller (NE96) : 1 pc. Compact Motor Handpiece (ENK50C-HR) : 1 pc. Collet ø1/8" (CHH-3.175), ø2.35 mm (CHH-2.35) : 1 pc. each Handpiece Holder : 1 pc. Handpiece Stand : 1 pc. Wrench (7 x 5.1) : 1 pc. Pin Wrench (K-233) : 1 pc. L Shaped Wrench (9) : 1 pc.

Espert 500 Compact Motor Handpiece

NAKANISHI Smart Switch (Blue)

Speed Range	1,000~50,000 rpm
Max. Output	140W
Weight	7.41 oz. excluding cord



Product Code ES9091	Product Name ENK50C-HR
Attachment EHR-500 — Motor ENK-500C	
Standard Accessories	Collet ø1/8" (CHH-3.175), ø2.35 mm (CHH-2.35) : 1 pc. each Wrench (7 x 5.1) : 1 pc. Pin Wrench (K-233) : 1 pc. L Shaped Wrench (9) : 1 pc.

Espert 500 Torque Set (Ring Type)



- Highest Power in its Class. Max. Output 200W
- Speed Range : 1,000~50,000 rpm
- Microprocessor controlled for optimal motor control
- Hand Switch [NAKANISHI Smart Switch]
- Memory Speed Function [FiXpeed®]

Product Code ES9086	Product Name ES50T-HR
Attachment EHR-500 — Motor ENK-500T — Controller NE96	
Standard Accessories	Controller (NE96) : 1 pc. Torque Motor Handpiece (ENK50T-HR) : 1 pc. Collet ø1/8" (CHH-3.175), ø2.35 mm (CHH-2.35) : 1 pc. each Handpiece Holder : 1 pc. Handpiece Stand : 1 pc. Wrench (7 x 5.1) : 1 pc. Pin Wrench (K-233) : 1 pc. L Shaped Wrench (9) : 1 pc.

Espert 500 Torque Motor Handpiece

NAKANISHI Smart Switch (Gray)

Speed Range	1,000~50,000 rpm
Max. Output	200W
Weight	8.82 oz. excluding cord



Product Code ES9092	Product Name ENK50T-HR
Attachment EHR-500 — Motor ENK-500T	
Standard Accessories	Collet ø1/8" (CHH-3.175), ø2.35 mm (CHH-2.35) : 1 pc. each Wrench (7 x 5.1) : 1 pc. Pin Wrench (K-233) : 1 pc. L Shaped Wrench (9) : 1 pc.

System Chart

Product Code	Product Name	

Attachment



Ring Type

ES9090	EHR-500	

50,000 rpm Max. (*1)
40,000 rpm Max. (*2)
Page 1-p24



Lever Type

ES11515	EHL-401	

50,000 rpm Max. (*1)
40,000 rpm Max. (*2)
Page 1-p24



Torque Type

ES41552	EHG-400	

40,000 rpm Max. (*1)
30,000 rpm Max. (*2)
Page 1-p25



90˚ Angle Type

ES81525	EIC-300	

40,000 rpm Max. (*1)
20,000 rpm Max. (*2)
Page 1-p25



50˚ Angle Type

ES81526	EKC-300	

40,000 rpm Max. (*1)
20,000 rpm Max. (*2)
Page 1-p25



90˚ Angle Torque Type

ES41551	ERA-270

40,000 rpm Max. (*1)
20,000 rpm Max. (*2)
Page 1-p25



LUSTER (Reciprocating motion)

ES11516	ELS-100

30,000 rpm Max. (*1)
30,000 rpm Max. (*2)
Page 1-p26



MINI-LUSTER (Reciprocating motion)

ES51554	EML-8

40,000 rpm Max. (*1)
30,000 rpm Max. (*2)
Page 1-p26



FINE BELT SANDER

KBS61557	EBS-101	

40,000 rpm Max. (*1)
30,000 rpm Max. (*2)
Page 1-p26

Speed Reducer



• 1/4 Speed Reducer

ES41553	ERG-01B	

40,000 rpm Max. (*1)
30,000 rpm Max. (*2)

May be connected between the motor and the spindle as required for increased torque.

Motor



• Compact Motor and Cord
1,000~50,000 rpm

ES9088	ENK-500C	



• Torque Motor and Cord
1,000~50,000 rpm

ES9089	ENK-500T	

Controller



• Espert 500

ES9087	NE96	

• Use ECN-011 or ERG-01 for ELECTER Emax EVOlution, ROTUS attachments



Extension Adaptor

ES11518	ECN-011	

40,000 rpm Max. (*1)
30,000 rpm Max. (*2)
Page 1-p27



Speed Reducer (1/4)

ES11517	ERG-01	

40,000 rpm Max. (*1)
30,000 rpm Max. (*2)
Page 1-p27

*Maximum Allowable Speed, continuous use may change depending on the material being cut and other application variables.

*1 : Maximum Allowable Speed, intermittent use.
*2 : Maximum Allowable Speed, continuous use.

***Order by product code.**

Product Code ES9088 COMPACT TYPE MOTOR ENK-500C



1,000~50,000 rpm

- Small, lightweight, high-speed brushless DC motor.
- Incorporates the NAKANISHI Smart Switch for easy on/off operation.
- Very low vibration noise and maintenance.

• Weight : 4.06 oz. excluding cord

Compact Type Motor

Product Code	Product Name	Specifications	
ES9088	ENK-500C	• Output Power : 140W • Maximum Torque : 6.0 cN·m • Cord Length : 4.5 ft	

Product Code ES9089 TORQUE TYPE MOTOR ENK-500T



1,000~50,000 rpm

- High-power, high-torque, high-speed brushless DC motor.
- Incorporates the NAKANISHI Smart Switch for easy on/off operation.
- Very low vibration noise and maintenance.

• Weight : 5.64 oz. excluding cord

Torque Type Motor

Product Code	Product Name	Specifications	
ES9089	ENK-500T	• Output Power : 200W • Maximum Torque : 8.7 cN·m • Cord Length : 4.5 ft	

Product Code ES9090 RING TYPE ATTACHMENT EHR-500



- Manufactured with micron level precision for high accuracy and high reliability.
- Slim, lightweight design allows for fine finishing of delicate parts.
- Ring Type one touch bur release.

• Collet
Standard Size : ø1/8" (CHH-3.175), ø2.35 mm (CHH-2.35) : 1 pc. each
Optional Collets : CHH-[][] are shown in page (6-p2)
• Weight : 3.32 oz.

50,000 rpm Max. (*1) 40,000 rpm Max. (*2)

Ring Type Attachment

Product Code	Product Name	Standard Accessories	
ES9090	EHR-500	• Collet ø1/8" (CHH-3.175), ø2.35 mm (CHH-2.35) : 1 pc. each • Wrench (7 x 5.1) : 1 pc. • Pin Wrench (K-233) : 1 pc. • L Shaped Wrench (9) : 1 pc.	

Product Code ES11515 LEVER TYPE ATTACHMENT EHL-401



- To attain more powerful grinding and fine polishing finish, attachment EHL-401 is designed to make it lightweight and fit to pen-grip type holding.
- Simple lever turning for bur exchange.
- Same chuck as used in EHR-500.

• Collet
Standard Size : ø1/8" (CHH-3.175), ø2.35 mm (CHH-2.35) : 1 pc. each
Optional Collets : CHH-[][] are shown in page (6-p2)
• Weight : 2.47 oz.

50,000 rpm Max. (*1) 40,000 rpm Max. (*2)

Lever Type Attachment

Product Code	Product Name	Standard Accessories	
ES11515	EHL-401	• Collet ø1/8" (CHH-3.175), ø2.35 mm (CHH-2.35) : 1 pc. each • Wrench (7 x 5.1) : 1 pc. • Pin Wrench (K-233) : 1 pc.	

Product Code ES41552 TORQUE TYPE ATTACHMENT EHG-400



● Torque type attachment used with ø1/4" chuck diameter as standard and nicely fits in hand-grip.

- Collet
  Standard Size : ø1/4" (CHG-6.35) : 1 pc.
  Optional Collets : CHG-[][] are shown in page (6-p2)
- Weight : 3.88 oz.

40,000 rpm Max. (*1) 30,000 rpm Max. (*2)
*Please use it with Speed Reducer.

Torque Type Attachment

Product Code	Product Name	Standard Accessories	
ES41552	EHG-400	• Collet ø1/4" (CHG-6.35) : 1 pc. • Wrench (10 x 10) : 1 pc. • Bar Wrench (K-212) : 1 pc.	

Product Code ES81525 90°ANGLE ATTACHMENT EIC-300

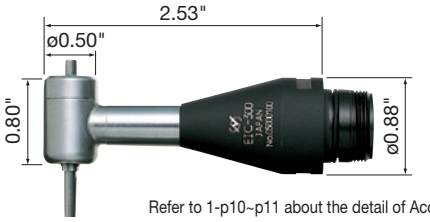

Refer to 1-p10~p11 about the detail of Accessories.

● 90°Angle Attachment with ø1/8" Collet is conveniently small and equally suitable for polishing flat surfaces with rubber pad paper disk, corner work, and grinding the inside of a pipes.

- Speed Reduction Ratio : 3/4
- Collet
  Standard Size : ø1/8" (CHC-3.175) : 1 pc.
  Optional Collets : CHC-[][] are shown in page (6-p2)
- Standard Accessories : Rubber Pad, Sandpaper Disk • Weight : 1.90 oz.

40,000 rpm Max. (*1) 20,000 rpm Max. (*2)

90° Angle Attachment

Product Code	Product Name	Standard Accessories	
ES81525	EIC-300	• Collet ø1/8" (CHC-3.175) : 1 pc. • Chuck Wrench (K-231) : 1 pc. • Wrench (20 x 24) : 1 pc. • Standard Accessories : 1 set	

Product Code ES81526 50°ANGLE ATTACHMENT EKC-300

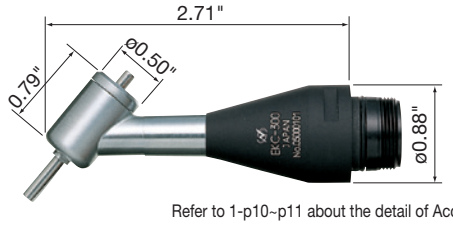

Refer to 1-p10~p11 about the detail of Accessories.

● 50°Angle Attachment is suitable for working in corners, cavities, etc.

- Reverse rotation against the motor
- Speed Reduction Ratio : 3/4
- Collet
  Standard Size : ø1/8" (CHC-3.175) : 1 pc.
  Optional Collets : CHC-[][] are shown in page (6-p2)
- Standard Accessories : Rubber Pad, Sandpaper Disk
- Weight : 1.90 oz.

40,000 rpm Max. (*1) 20,000 rpm Max. (*2)

50° Angle Attachment

Product Code	Product Name	Standard Accessories	
ES81526	EKC-300	• Collet ø1/8" (CHC-3.175) : 1 pc. • Chuck Wrench (K-231) : 1 pc. • Wrench (20 x 24) : 1 pc. • Standard Accessories : 1 set	

Product Code ES41551 90°ANGLE TORQUE ATTACHMENT ERA-270

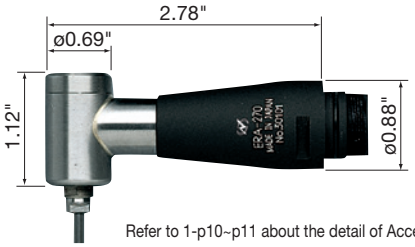

Refer to 1-p10~p11 about the detail of Accessories.

● 90°Angle type is suitable for the work of corner and the grinding of the inside of pipe.

- Speed Reduction Ratio : 1/1.5
- Collet
  Standard Size : ø1/8" (CHS-3.175) : 1 pc.
  Optional Collets : CHS-[][] are shown in page (6-p4)
- Weight : 3.77 oz.

40,000 rpm Max. (*1) 20,000 rpm Max. (*2)

90° Angle Torque Attachment

Product Code	Product Name	Standard Accessories	
ES41551	ERA-270	• Collet ø1/8" (CHS-3.175) : 1 pc. • Wrench (8 x 5), (7 x 5.1), (20 x 24) : 1 pc. each	

*Maximum Allowable Speed, continuous use may change depending on the material being cut and other application variables.

*1 : Maximum Allowable Speed, intermittent use.
*2 : Maximum Allowable Speed, continuous use.

***Order by product code.**

Product Code ES11516 Reciprocating Motion Polishing Finisher LUSTER ATTACHMENT ELS-100

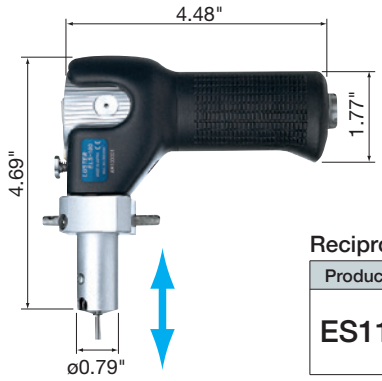

- Reciprocating Stroke (variable) : 0~7,600 times/min (Max.)
- Perfect for final finishing such as lapping and honing after grinding. Streamlines conventional hand-finishing of metal molds.
- Reciprocating type compact special polisher for ESPERT motor.
- Stroke is adjustable from 0~6 mm.

• Max. tool shank diameter ø0.25", Screw clamp type.
• Weight : 1 lb. 7.99 oz.

30,000 rpm Max. (*1) 30,000 rpm Max. (*2)

Reciprocating Motion Polishing Finisher LUSTER Attachment

Product Code	Product Name	Standard Accessories	
ES11516	ELS-100	• Standard Accessories : 1set • Allen Wrench (2 mm), (3 mm) : 1 pc. each • Lubrication Oil • Lubrication Nozzle for LUSTER	

Product Code ES51554 Pencil-Type Reciprocating Polishing Finisher MINI-LUSTER ATTACHMENT EML-8

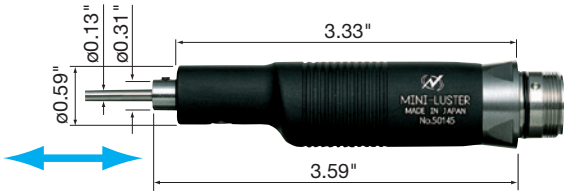

- Reciprocating Stroke (variable) : 0~10,000 times/min (Max.)
- Stroke Range : 0.8 mm

• Max. tool shank diameter ø0.13", Screw clamp type.
• Weight : 4.59 oz.

40,000 rpm Max. (*1) 30,000 rpm Max. (*2)

Pencil-Type Reciprocating Polishing Finisher MINI-LUSTER Attachment

Product Code	Product Name	Stroke Range	Standard Accessories	
ES51554	EML-8	0.8 mm	• Standard Accessories : 1 set • Allen Wrench (1.5 mm) : 1 pc.	

Product Code KBS61557 FINE BELT SANDER ATTACHMENT EBS-101

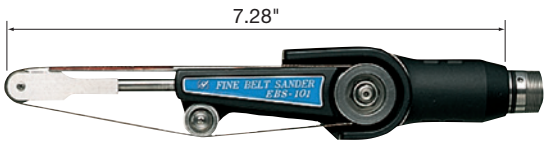

- The angle of belt section is steplessly adjustable.

• Width of Belt : 8 mm, 6 mm, 4 mm.
• Belt Speed : 0~3,084 ft/min (Max.)
• Weight : 12.52 oz.

40,000 rpm Max. (*1) 30,000 rpm Max. (*2)

*Refer to 1-p17 about the detail of Belt.

FINE BELT SANDER Attachment

Product Code	Product Name	Standard Accessories	
KBS61557	EBS-101	• 8 mm Belt (3 different kinds) : 2 pcs. each • 6 mm Belt (3 different kinds) : 2 pcs. each • 4 mm Belt (3 different kinds) : 2 pcs. each • Allen Wrench (3 mm) : 1 pc.	

Product Code ES41553 SPEED REDUCER (1/4) ERG-01B



- 1/4 Speed Reducer ERG-01B provides 4 times greater torque by mounting it in between the motor and the attachment.

• Speed Reduction Ratio 1/4
• Weight : 2.29 oz.

40,000 rpm Max. (*1)
30,000 rpm Max. (*2)

Speed Reducer (1/4)

Product Code	Product Name	Standard Accessories	
ES41553	ERG-01B	• Pin Wrench (K-233) : 1 pc.	

Product Code ES11517 SPEED REDUCER (1/4) ERG-01



- The Speed Reducer can be used with the attachments for Emax EVOlution and ROTUS you already have.
- Reduces the speed 1/4 and multiplies the torque by 4 times.

• Speed Reduction Ratio 1/4
• Weight : 2.19 oz.

40,000 rpm Max. (*1)
30,000 rpm Max. (*2)

Speed Reducer (1/4)

Product Code	Product Name	Standard Accessories	
ES11517	ERG-01	• Pin Wrench (K-233) : 1 pc.	

Product Code ES11518 EXTENSION ADAPTOR ECN-011



- The Adaptor can be used with the attachments for Emax EVOlution and ROTUS you already have.

• Speed Ratio 1 : 1
• Weight : 1.09 oz.

40,000 rpm Max. (*1)
30,000 rpm Max. (*2)

Extension Adaptor

Product Code	Product Name	Standard Accessories	
ES11518	ECN-011	• Wrench (20 x 24) : 1 pc.	

ESPERT 500 Spare Parts

Product	Description	Product Code	Product Name	Specifications	
	Foot Pedal	EG11404	FC-40	• Variable Speed Control Foot Pedal	
	Espert 500 Handpiece Stand	8104	K-274		
	Espert 500 Compact Motor Cord	ES9093	ENKCD-50C	• Compact Motor Cord • 4.5 ft Long	
	Espert 500 Compact Motor Cord	9095	ENKCD-50C 3M	• Compact Motor Cord • 9.84 ft Long	
	Espert 500 Torque Motor Cord	ES9094	ENKCD-50T	• Torque Motor Cord • 4.5 ft Long	
	Espert 500 Torque Motor Cord	9096	ENKCD-50T 3M	• Torque Motor Cord • 9.84 ft Long	

*Maximum Allowable Speed, continuous use may change depending on the material being cut and other application variables.

*1 : Maximum Allowable Speed, intermittent use.
*2 : Maximum Allowable Speed, continuous use.

1
EmaxEVO
ESPERT
ROTUS
IMPULSE
PRESTO II
Sheenus ZERO
2
iSpeed3
E2000
ø1.0"/ø0.98"/ø0.897"
E3000
– One Piece
E3000
– Modular
ø1.18"
ø1.0"/ø0.98"
ø0.897"
E3000
– 80,000rpm
E4000
3
MA
ø0.897"
ø1.0"
ø0.98"
ø1.18"
MS
ø0.75"
ø0.79"
ø0.87"
ø0.91"
ø1.0"
ø0.98"
4
HES
iSpeed5
HTS
HPS
PLANET
Xpeed
ABT
5
AIR LINE KIT
6
PARTS
7
TECHNICAL DATA
8
APPLICATION EXAMPLES
INDEX

ROTUS

30,000 rpm

MODULAR TYPE HIGH TORQUE AIR GRINDER

- High torque air motor assembled with special vane mechanism.
- Two types of air motors can be selected depending on the application.
- 1/4 and 1/15 Speed Reducers (RG-01, RG-02) can be connected.
- Lubricating oil is required.



IMPULSE

60,000 rpm

PENCIL TYPE AIR GRINDER

- Durable and quiet high-efficient air grinder.
- The IMPULSE Series also offers 60 degree and 90 degree models. Choose the type that best fits your application requirements.
- Lubricating oil is required.



PRESTO II

320,000 rpm

ULTRA-PRECISION HIGH SPEED AIR TURBINE GRINDER

- Most suitable for delicate processing works due to no lube air turbine handpiece.



1
EmaxEVO
ESPERT
ROTUS
IMPULSE
PRESTO II
Sheenus ZERO
2
iSpeed3
E2000 ø1.0"/ø0.98"/ø0.897"
E3000 – One Piece
E3000 – Modular ø1.18"
ø1.0"/ø0.98" ø0.897"
E3000 – 80,000rpm
E4000
3
MA ø0.897"
ø1.0" ø0.98" ø1.18"
MS ø0.75" ø0.79"
ø0.87" ø0.91" ø1.0" ø0.98"
4
HES
iSpeed5
HTS
HPS
PLANET
Xpeed
ABT
5
AIR LINE KIT
6
PARTS
7
TECHNICAL DATA
8
APPLICATION EXAMPLES
INDEX

ROTUS System Chart

Product Code	Product Name		Attachment
RE11008	IR-310		Ring Type
40,000 rpm Max. (*1) 40,000 rpm Max. (*2)		Page 1-p8	
RE10178	IH-300		Lever Type
40,000 rpm Max. (*1) 40,000 rpm Max. (*2)		Page 1-p8	
2812	IG-400		Straight Type
40,000 rpm Max. (*1) 40,000 rpm Max. (*2)		Page 1-p8	
RE10188	HG-200		Torque Type
30,000 rpm Max. (*1) 27,000 rpm Max. (*2)		Page 1-p9	
RE10235	BMH-300		Long Type
35,000 rpm Max. (*1) 35,000 rpm Max. (*2)		Page 1-p9	
RE10247	MFC-300S		90° Mini Angle Type
15,000 rpm Max. (*1) 15,000 rpm Max. (*2)		Page 1-p9	
RE10252	MFC-300M		90° Mini Angle Type (Very Small Head)
15,000 rpm Max. (*1) 15,000 rpm Max. (*2)		Page 1-p9	
RE10182	IC-300		90° Angle Type
35,000 rpm Max. (*1) 20,000 rpm Max. (*2)		Page 1-p10	
RE10266	KC-300		50° Angle Type
35,000 rpm Max. (*1) 20,000 rpm Max. (*2)		Page 1-p10	
LS10815	LS-100		LUSTER (Reciprocating motion)
30,000 rpm Max. (*1) 30,000 rpm Max. (*2)		Page 1-p12	
LS51307	ML-8		MINI-LUSTER (Reciprocating motion)
35,000 rpm Max. (*1) 30,000 rpm Max. (*2)		Page 1-p13	
LS11380	SLS-16		SWING-LUSTER (Right to Left motion)
35,000 rpm Max. (*1) 24,000 rpm Max. (*2)		Page 1-p13	
RE18060	HA-500		Hammer Action Type
20,000 rpm Max. (*1) 16,000 rpm Max. (*2)		Page 1-p16	
KBS61065	KBS-101		FINE BELT SANDER
35,000 rpm Max. (*1) 35,000 rpm Max. (*2)		Page 1-p16	

Speed Reducer · Extension Joint



Extension Joint

RE10210	CN-01	

35,000 rpm Max. (*1) Page 1-p18
35,000 rpm Max. (*2)



1/4 Speed Reducer

RO10214	RG-01	

30,000 rpm Max. (*1) Page 1-p18
30,000 rpm Max. (*2)



1/15 Speed Reducer

RO10228	RG-02	

30,000 rpm Max. (*1) Page 1-p18
30,000 rpm Max. (*2)

*May be connected between the motor and the attachment as required for increased torque.



• Air Motor with Chip Air Mechanism
3,000~30,000 rpm

RO10163A	IM-300	

Page 1-p33



• Air Motor with 360° Twist-Free Joint
3,000~30,000 rpm

RO10163	IM-301	

Page 1-p33



• Air Line kit

4507	AL-H1207F	

*This air line kit is designed for use with the AFC-45 foot control, Product Code AF10045. Page 5-p2



• Foot Control

AF10045	AFC-45	

Page 6-p9

*Maximum Allowable Speed, continuous use may change depending on the material being cut and other application variables.
*1 : Maximum Allowable Speed, intermittent use. *2 : Maximum Allowable Speed, continuous use.

Ultra-Precision High-Torque Air Grinder

- **30,000 rpm**
- **High torque air motor assembled with special vane mechanism.**
- **Two types of air motors can be selected depending on the application.**
- **1/4 and 1/15 Speed Reducers (RG-01, RG-02) can be connected.**

One Touch Tool Changing

- Ring Type (IR-310)
  Ring operated open/close chuck



A Special Rotary Vane Air Motor is Incorporated

The air motor is utilizes a special vane design which keeps constant speed even under load providing stable grinding and polishing operation.

Twist Free Hose

To prevent twisting of the hose, 360˚ Twist- Free Joint connects the motor and the hose.

Wide-range of Collet Sizes

Various sizes ranging from ultra-small diameter (0.3 mm) are available for each attachment. Furthermore, collet replacement can be easily performed without wrench.

Ring Switch

Assembled with ON/OFF, speed control and FWD./REV. control ring switch.

14 Types of Attachments for All Types of Applications

Capable of infinite applications with 14 different attachments.
*Interchangeable with attachments form the Emax EVOlution series.



Special Dust Protection Mechanism (patented)

The chuck section of ROTUS has a special built-in dust protection mechanism that prevents entry of foreign matter such as chips and provides superior durability.

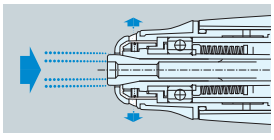



Attachment IR-310 + Air motor IM-301

Specifications

Speed	: Max. 30,000 rpm (58PSI)
Proper Air Pressure	: 44~65PSI
Air Consumption	: 2.65CFM
Output Power	: 46W (motor)
Max. Torque	: 6.6 cN · m (58PSI)
Motor	: Air motor IM-301
Dimensions	: Air motor (IM-301) + Attachment (IR-310) See left figures
Weight	: Air motor (IM-301) + Attachment (IR-310) : 7.83 oz.

Product Code 1164 ROTUS STANDARD SET (Ring Type)



The ROTUS System is a hand-held grinder with an energy saving air motor. Since it is an air driven system, there is virtually no heat generation resulting in excellent durability. Select from a variety of attachments depending on the application.

30,000 rpm

Product Code 1164	Product Name R301-IR
	
Standard Equipment	Air Grinder (IM-301+IR-310) : 1 pc. Collet ø1/8" (CHH-3.175), ø2.35 mm (CHH-2.35) : 1 pc. each Air Line Kit (AL-H1207F) : 1 pc. Foot Control (AFC-45) : 1 pc. Hose for Piping (K-275) 6 ft : 1 pc. Lubricating Oil (K-211) : 1 pc. Wrench (7 x 5.1) : 1 pc. Pin Wrench (K-233) : 2 pcs. L Shaped Wrench (9) : 1 pc.

Motor for ROTUS (Pneumatically Driven)

Air motor designed for high-efficiency

To achieve high torque, ROTUS air motor is assembled with micron precision between the vanes and the internal surface of cylinder using NAKANISHI's proprietary techniques. This high performance air motor with minimal power loss from load fluctuation has excellent performance in its grinding stability. Moreover, the motor with minimal air consumption runs quietly and the energy-saving mechanism makes it possible to operate with a 1 hp (0.75KW) air compressor.

Air Cooling System generates no heat for a continuous operation

The motor prevents heat generation and expansion of metal by air cooling system and provides stable rotation speed.

Light-weight and compact design

The motor with attachment IR-310 is only 7.83 oz. Its light-weight and well balanced design provides excellent grinding performance.

Assembled with Speed Control and Forward/Reverse Control Ring

Forward/Reverse Rotating Direction Control Ring located at the end of the motor can control the motor speed as well.

Speed control by Foot Control

Fine adjustment of variable speed can be controlled by Foot Control.

Excellent quietness with Silencer

By attaching the silencer to the end of the exhaust air tubing, the motor is operated extremely quiet.

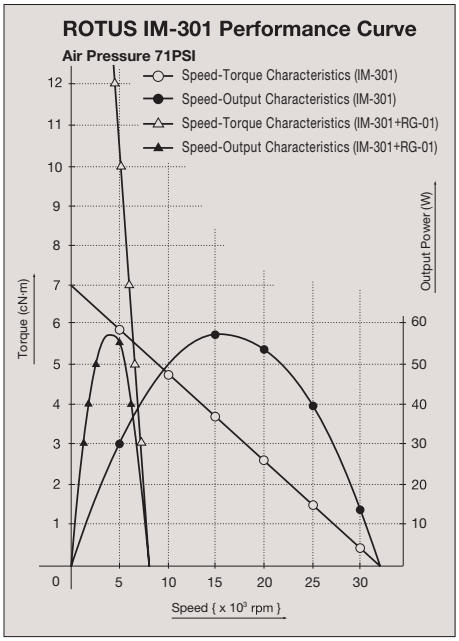

Product Code R010163 AIR MOTOR IM-301 (with Twist-Free Joint Mechanism)

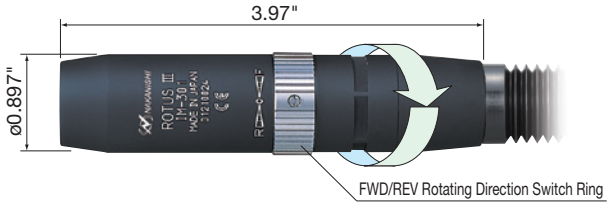

3,000~30,000 rpm

Air Motor with 360° Twist-Free Joint Mechanism

- Adopted Twist-Free Joint mechanism between the motor and the hose has solved the problem of hose twisting.
- Weight : 4.59 oz. excluding hose

Product Code	Product Name	Standard Accessories	
R010163	IM-301	• Hose (K-206) : 6 ft • Silencer (K-209) • Pin Wrench (K-233) : 1 pc.	

Product Code R010163A AIR MOTOR IM-300 (with Chip Air Mechanism)

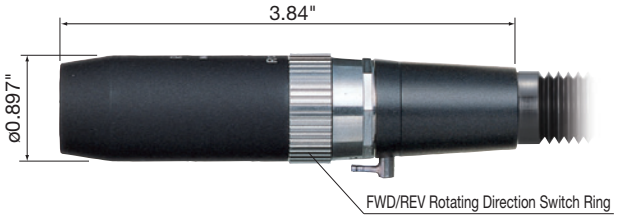

3,000~30,000 rpm

Air Motor with Chip Air Mechanism



- Air motor IM-300 with Chip Air mechanism blows away the cutting dust with clean air coming through the top end of the attachment. The handheld cutting work remains cool by the chip air allowing comfort through out the working process. (This is only with the attachment IH-300)
- Weight : 4.59 oz. excluding hose

Product Code	Product Name	Standard Accessories	
R010163A	IM-300	• Hose (K-207) : 6 ft • Silencer (K-209) • Pin Wrench (K-233) : 1 pc.	

1 EmaxEVO ESPERT ROTUS IMPULSE PRESTO II Sheenus ZERO
2 iSpeed3 E2000 ø1.0"/ø0.98"/ø0.897" E3000 – One Piece E3000 – Modular ø1.18" ø1.0"/ø0.98" ø0.897" E3000 – 80,000rpm E4000
3 MA ø0.897" ø1.0" ø0.98" ø1.18" MS ø0.75" ø0.79" ø0.87" ø0.91" ø1.0" ø0.98"
4 HES iSpeed5 HTS HPS PLANET Xpeed ABT
5 AIR LINE KIT
6 PARTS
7 TECHNICAL DATA
8 APPLICATION EXAMPLES
INDEX

*Order by product code.

- 60,000 rpm
- Durable and quiet high-efficient air grinder.
- The IMPULSE Series also offers 60 degree and 90 degree models. Choose the type that best fits your application requirements.

Product Code 2990 STRAIGHT IMPULSE NSP-601A 60,000 rpm



The air motor is assembled with a special vane design which keeps constant speed even under load providing stable grinding and polishing operation.

- The shape of the grinder is designed for sensitive finger touch control toward the top of the cutting tool.
- Smooth start is guaranteed.
- The safety design of clamping the chuck up to 1.14" maintains stable rotation of the cutting tool.

Product Code	Product Name	Standard Accessories	
2990	NSP-601A	• Collet ø1/8" (CHS-3.175) : 1 pc. • Wrench (8 x 5) : 1 pc. • Bar Wrench (K-212) : 1 pc. • Hose (K-213) 4.5 ft • Silencer (K-208) : 1 pc.	

Features

- The shape of the grinder is specially designed for sensitive finger touch control toward the top of the cutting tool. The front part of the NSP-601 model is made of stainless steel ; the back portion of aluminum alloy. The exhaust air line hose with silencer keeps the noise level to a minimum. To prevent twisting of the double line hose, a 360 degree twist-free joint connects the motor and the hose.

Excellent Silencer

Silencer on the exhaust air hose keeps the grinder very quiet.

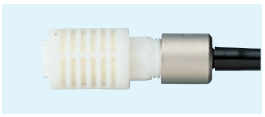

Free From Twisting Hose

To prevent the twisting of hose, 360° Twist-Free Joint connects the motor and the hose.

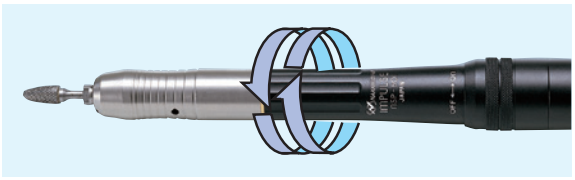

Mounting & Dismounting Cutting Tool

Insert the wrench provided into the hole on the spindle and open or close the chuck with the Chuck Wrench to exchange the cutting tool.

Exchangeable Collet

- Standard Size : ø1/8" (CHS-3.175)
- Optional Collets : CHS-[][] are shown in page (6-p4)

Set-Up Drawing

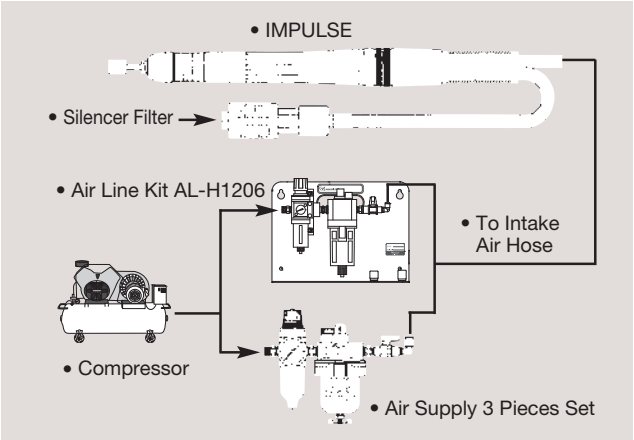

• Use Air Line Kit AL-H1206 or air supply 3 pieces set. (Air Filter, Air Regulator, Lubricator)

Connecting Part To Air Line Kit

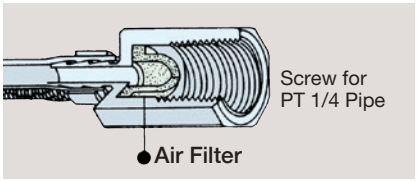

Specifications

Rotating Speed	: 60,000 rpm
Air Consumption	: 5.83CFM
Proper Air Pressure	: 58~87PSI
Hose Length	: 4.5 ft
Weight	: 5.82 oz.
Output	: 70W
Intake Air Hose Length	: 4.5 ft
Eraser Hose Length	: 3.9 ft

Product Code NK45400 60° IMPULSE NA45-400 40,000 rpm

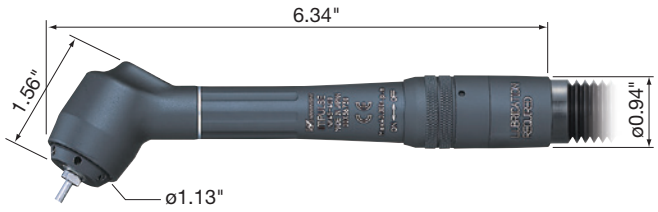

● Angled model housings are all aluminum alloy.

- Collet
  Standard Size : ø1/8" (CHS-3.175)
  Optional Collets : CHS-[][] are shown in page (6-p4)
- Weight : 7.41 oz.

Product Code	Product Name	Standard Accessories	
NK45400	NA45-400	• Collet ø1/8" (CHS-3.175) : 1 pc. • Wrench (8 x 5) : 1 pc. • Bar Wrench (K-212) : 1 pc. • Hose (K-213) 4.5 ft • Silencer (K-208) : 1 pc.	

Product Code NK45230 60° IMPULSE HIGH TORQUE NA45-230 23,000 rpm

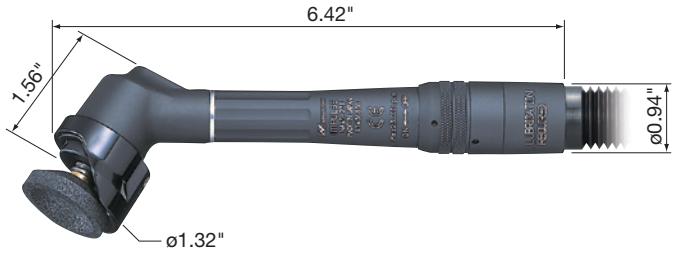

● Angled model housings are all aluminum alloy.

- Collet
  Standard Size : ø1/8" (CHS-3.175)
  Optional Collets : CHS-[][] are shown in page (6-p4)
- Weight : 6.70 oz.

Product Code	Product Name	Standard Accessories	
NK45230	NA45-230	• Collet ø1/8" (CHS-3.175) : 1 pc. • Special Grindstone Arbor (NCH-01) : 1 pc. • Wrench (8 x 5) : 1 pc. • Bar Wrench (K-212) : 2 pcs. • Allen Wrench (1.5 mm) : 1 pc. • Hose (K-213) 4.5 ft • Silencer (K-208) : 1 pc. • Cup Wheel (NK06104, NK45800) : 1 pc. each • Mounted Point (42423) : 1pc. • Rubber Pad (NK11033) : 1 pc. • Sandpaper Disk (Grits #120, 320, 600, 1000) : 2 pcs. each	

Product Code NK90230 90° IMPULSE NA90-230 23,000 rpm

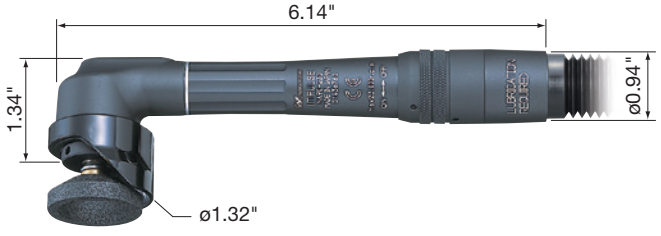

● Angled model housings are all aluminum alloy.

- Collet
  Standard Size : ø1/8" (CHS-3.175)
  Optional Collets : CHS-[][] are shown in page (6-p4)
- Weight : 6.70 oz.

Product Code	Product Name	Standard Accessories	
NK90230	NA90-230	• Collet ø1/8" (CHS-3.175) : 1 pc. • Special Grindstone Arbor (NCH-01) : 1 pc. • Wrench (8 x 5) : 1 pc. • Bar Wrench (K-212) : 2 pcs. • Allen Wrench (1.5 mm) : 1 pc. • Hose (K-213) 4.5 ft • Silencer (K-208) : 1 pc. • Cup Wheel (NK06104, NK45800) : 1 pc. each • Mounted Point (42423) : 1pc. • Rubber Pad (NK11033) : 1 pc. • Sandpaper Disk (Grits #120, 320, 600, 1000) : 2 pcs. each	

*Order by product code.

- **When using IMPULSE series, use with the air line kit AL-H1206 shown below or equivalent air line kit in order to provide proper air pressure and lubrication to the air motor.**

***All lubricators offered by NAKANISHI are micro-mist type. They are specially designed to supply about 3% of visual drip rate (about 30 drops/min) into the secondary side (air motor).**

Product Code 4506 AIR LINE KIT AL-H1206 (Automatic Lubricating Device)

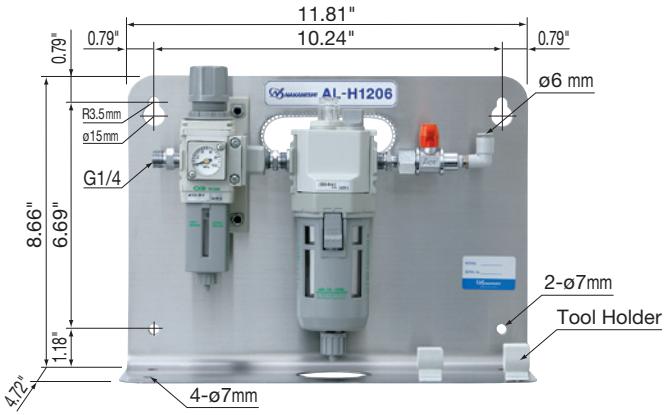

- Supplies smooth air flow and automatic lubrication, ensuring stable speed and power.
- Adjustable lubrication and air pressure settings provide longevity to the Air Grinder.
- Best for grinding and polishing applications. This compact Air Line Kit allows for portability or stationary mounting as well as a carrier for the Impulse.

Air Line Kit (For ø6 mm Hose · Filter Mesh 5 µm)

Product Code	Product Name	Standard Equipment · Accessories	
4506	AL-H1206	• Air Filter • Air Regulator • Air Pressure Gauge • Lubricator • Air ON-OFF Valve • Hose for Piping (K-275) : 6 ft • Lubricating Oil (K-211) : 1 pc.	

Optional Accessories

Product	Product Code	Grit	O.D. (mm)	Description • Product Name		
	64830	# 36	ø 20	Cup Wheel (12 pcs./pack)	Standard	
	64831	# 46			Hard	
	NK06104	# 80			Standard	
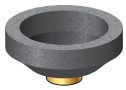	64835	# 36	ø 30		Standard	
	NK86A46S	# 46			Hard	
	NK45800	# 80			Standard	
	NK45801				Hard	
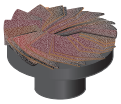	64842	# 80	ø 30	Polishing Sander (5 pcs./pack)		
	64844	# 120				
	64846	# 180				
	64847	# 240				
	64849	# 400				

Product	Product Code	Grit	O.D. (mm)	Description • Product Name	
	64821	——	ø 20	Rubber Pad (5 pcs./pack) (use sandpaper)	
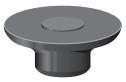	NK11033	——	ø 30		
 0.31"	42423	# 100	ø 4	Mounted Point (10 pcs./pack)	

The Exchangeable Attachment Chart

If you replace the Cup Grinding Stone with a ø1/8" Collet, a mounted grindstone can be used. When using a Collet, the wheel cover is removable for better visibility if necessary.

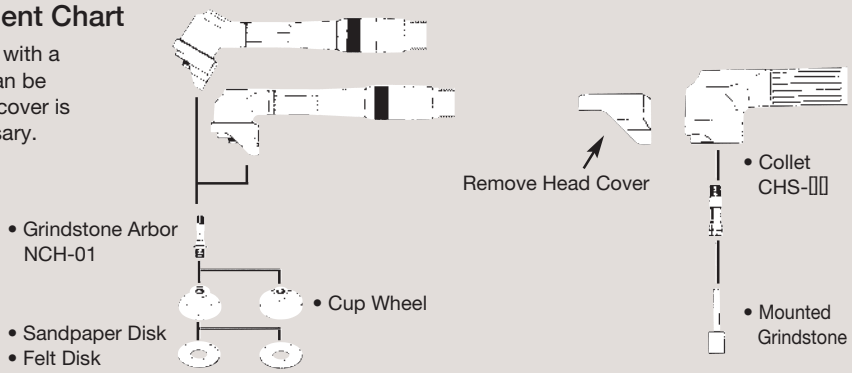

*When using a rubber pad, slow down the rotating speed.

IMPULSE Spare Parts

Product	Description	Product Code	Product Name	Fit to	
 1.14"	Grindstone Arbor (for Cup Wheel & Rubber Pad)	NK11045	NCH-01	IMPULSE	
	Head Cover	NK11043	CNA	IMPULSE	
	Hose 4.5 ft	K076211	K-213	IMPULSE	
	Silencer Small (w/Metal Fittings)	AA10055	K-208	IMPULSE	
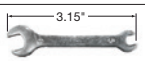 3.15"	Wrench 8 x 5 mm (0.31" x 0.20")	RA12012	——	IMPULSE	
	Bar Wrench (2.83")	RE22015	K-212	IMPULSE	
	Allen Wrench (1.5 mm)	——	——	IMPULSE	Available in the market
	Lubricating Oil (4 oz.)	AA10478	K-211	For Air Line Kit AL-H1206	
	Lubricating Oil (32 oz.)	AA10480	K-202	For Air Line Kit AL-H1206	

PRESTO II

ULTRA-PRECISION HIGH SPEED AIR TURBINE GRINDER

AIR DRIVEN

- 320,000 rpm
- Ultra-high speed no lube air turbine handpiece ideal for delicate processing application.
- Chip air blows away the cutting powder and cools the cutting tool.
- Built-in dust protect mechanism developed by NAKANISHI ensures long durability.

Product Code Y150022 PRESTO II STANDARD SET





●PRESTO II is a ultra high speed 320,000 rpm non-lube air turbine. It is most suitable for precision processing works such as small precision parts, ceramic, correction of printed circuit board, etc. due to its non-lube handpiece. Flexible tubing ensures excellent workability reducing fatigue to the operator's hand for long continuous use.

Specifications

Rotating Speed	: 320,000 rpm
Proper Air Pressure	: 36PSI
Weight	: 2.50 oz. (w/o Hose)
Inside Diameter	: ø1.6 mm Bur Only
Air Consumption	: 1.41CFM



● **NAKANISHI's Own Dust Protection Mechanism**
Chip Air Mechanism blows away the cutting powder to improves cutting efficiency. It also reduces the heat generated by cutting to extend the service life of the bur.

PRESTO II Standard Set

Product Code	Product Name	Standard Equipment	
Y150022I	PR2-304S	• Presto Handpiece (PR-304) : 1pc. • Air Line Kit (PR2-06) : 1pc. • Foot Control (AFC-40) : 1pc. • Handpiece Holder (Z014) : 1pc.	

Product	Product Code	Product Name	Standard Accessories	
	T815001I	PR-304	• 6 ft Hose	

PRESTO II Spare Parts

Product	Product Code	Description · Product Name	Specifications	
	Z307015I	PRESTO II Air Line Kit PR2-06 (w/o Lubricator · Filter Mesh 5 µm)		
	Z100001	PRESTO Foot Control AFC-40		
	T815016I	PRESTO II Cartridge PR-03		
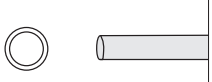	Z101240	Piping Hose K-237	• 6 ft Long • ø0.24"	
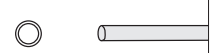	T815220	Air Turbine Hose K-238	• 6 ft Long • ø0.20"	
	HR10303	Pin Wrench T-751		

*Order by product code.

Sheenus ZERO

19 - 29 KHz



ULTRASONIC POLISHER

- Sheenus ZERO can be used for grinding, polishing and mirror finishing on a wide range of materials from aluminum dies to cemented carbide dies. It is also perfect for plastic molds, press, casting, forging, trimming and header dies.
- This tool quickly removes hard layer of EDM deposits and polishes difficult areas such as complex corners and ribs.

1
EmaxEVO
ESPERT
ROTUS
IMPULSE
PRESTO II
Sheenus ZERO
2
iSpeed3
E2000
ø1.0"/ø0.98"/ø0.897"
E3000
– One Piece
E3000
– Modular
ø1.18"
ø1.0"/ø0.98"
ø0.897"
E3000
– 80,000rpm
E4000
3
MA
ø0.897"
ø1.0"
ø0.98"
ø1.18"
MS
ø0.75"
ø0.79"
ø0.87"
ø0.91"
ø1.0"
ø0.98"
4
HES
iSpeed5
HTS
HPS
PLANET
Xpeed
ABT
5
AIR LINE KIT
6
PARTS
7
TECHNICAL DATA
8
APPLICATION EXAMPLES
INDEX

Sheenus ZERO

ULTRASONIC POLISHER

ULTRASONIC

- **Sheenus ZERO can be used for grinding, polishing and mirror finishing on a wide range of materials from aluminum dies to cemented carbide dies. It is also perfect for plastic molds, press, casting, forging, trimming and header dies.**
- **This tool quickly removes hard layers of EDM deposits and polishes difficult areas such as complex corners and ribs.**
- **Capabilities include bur removal, grinding and polishing of precision molds, dies electronic and ceramic components.**

Product Code 7775 SHEENUS ZERO STANDARD SET



Specifications

Controller Model	: NE330 120V
Power Source	: AC120V/240V, 50-60Hz
Power consumption	: 100VA
Dimensions	: W6.34" x D10.08" x H3.31"
Oscillation frequency	: 19 KHz - 29 KHZ
Power conditioning	: Continuous variable type
Frequency control	: Auto-tracking type
Output power	: UNCLAMP mode Max. 45W
	: CLAMP mode Max. 20W
Weight	: 3 lb. 5 oz.
Handpiece Model	: US-50P
Oscillator	: PZT piezoelectric type
Attachment fixing	: M6 screw
Cable length	: 6 ft
Dimensions	: ø0.63" (Max ø1.10) x L5.28"
Weight	: 5.29 oz. (excluding cable)

NEW!



Sheenus ZERO Standard Set

Product Code	Product Name	Standard Equipment	
7775	US-50PS 120V	• Controller {NE330 120V) • Ultrasonic Handpiece (US-50P) * Power Cable • Included Accessories: 1 set [Tip Holder (60902, 60922) 2 pcs., Ceramic fiber grindstone (60735) 1 pc., Electroplated diamond file (60101) 1 pc.] • Tool box (plastic): 1 pc. • Wrench (10 mm) • Allen Wrench (2.5 mm) • Foot Pedal (FC-24) : 1 pc. • Fuse AC120V (T1 .6AH 250V) : 2 pcs.	

Product Code 7778 CONTROLLER NE330 120V



- Power Level Indicator
  2 Mode Display Selection
- Easy Touch Function Switches
- Powerful and Constant
  Maximum output of 45W (Frequency 19 - 29 KHz) and constant output power.

Product Code	Product Name	Standard Accessories	
7778	NE330 120V	• Fuse AC120V (T1.6AH 250V) : 2 pcs.	

Product Code 7780 HANDPIECE US-50P



Tip holder and Ceramic fiber grindstone in this picture are not provided when only handpiece US-50P is purchased.

- Ergonomically comfortable and lightweight for effortless work over long periods.
- Light, resin body ergonomically designed to provide precise control while operating.

Product Code	Product Name	Specifications	
7780	US-50P	• Oscillator : PZT piezoelectric type • Attachment fixing : M6 screw • Cable length : 6 ft (2.12 oz.) • Dimensions : ø0.63" (Max. ø1.10") x L5.28" • Weight : 5.29 oz. (excluding cable)	

Sheenus ZERO Spare Parts

Product	Product Code	Description	
	8103	FC-24 Foot Pedal (ON/OFF switch only)	
	8104	K-274 Handpiece Stand	

Product	Description	
	Wrench	10 mm Available in the market
	Allen Wrench	2.5 mm Available in the market

■Electroplated diamond file (comes with 1 piece)

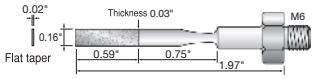

Grit	Product Code
# 200	60101
# 320	60102
# 600	60103

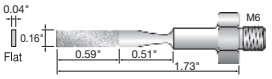

Grit	Product Code
# 200	60105
# 320	60106
# 600	60107

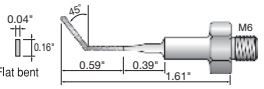

Grit	Product Code
# 200	60111
# 320	60112
# 600	60113

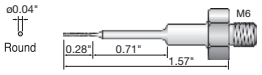

Grit	Product Code
# 200	60151
# 320	60152
# 600	60153

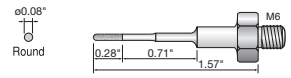

Grit	Product Code
# 200	60155
# 320	60156
# 600	60157

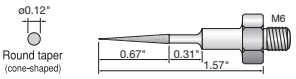

Grit	Product Code
# 200	60181
# 320	60182
# 600	60183

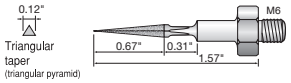

Grit	Product Code
# 200	60185
# 320	60186
# 600	60187

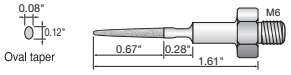

Grit	Product Code
# 200	60191
# 320	60192
# 600	60193

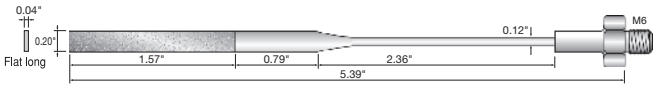

Grit	Product Code
# 200	60115
# 320	60116
# 600	60117

✻ Flat long type is used to set output power LOW mode.

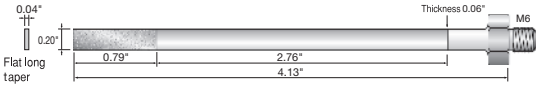

Grit	Product Code
# 200	60231
# 320	60232
# 600	60233

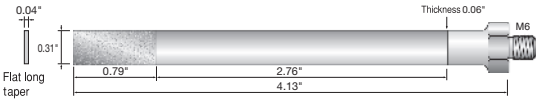

Grit	Product Code
# 200	60235
# 320	60236
# 600	60237

■Special tip holder (2 piece pack) **

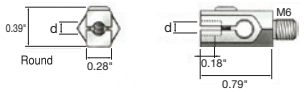

Grain diameter	Product Code
d=ø0.08"	60901
d=ø0.12"	60902
d=ø0.126"	60904
d=ø0.13"	60903

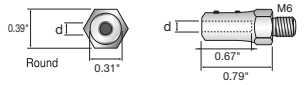

Grain diameter	Product Code
d=ø0.08"	60911
d=ø0.12"	60912
d=ø0.126"	60913

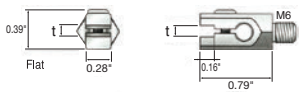

Grain diameter	Product Code
t=ø0.03"	60921
t=ø0.04"	60922
t=ø0.08"	60923
t=ø0.12"	60924
t=ø0.126"	60925

■Brass lapping tip (5 piece pack) **

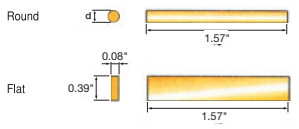

Grain diameter	Product Code
d=ø0.08"	60801
d=ø0.12"	60802
	60805

■Ceramic fiber grindstone (2 piece pack) **

Use the correct size special tip holder for clamping.

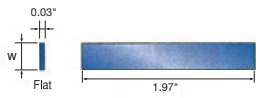

Grit	Color	W=0.16"		W=0.24"	
# 180	Ivory	60701		60711	
# 300	Brown	60702		60712	
# 400	Orange	60703		60713	
# 600	Black	60704		60714	
# 800	Blue	60705		60715	
# 1,000	White	60706		60716	
# 1,200	Pink	60707		60717	

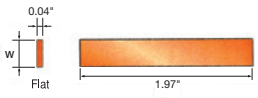

Grit	Color	W=0.16"		W=0.24"		W=0.39"	
# 180	Ivory	60721		60731		62961	
# 300	Brown	60722		60732		62962	
# 400	Orange	60723		60733		62963	
# 600	Black	60724		60734		62964	
# 800	Blue	60725		60519		62965	
# 1,000	White	60726		60736		62966	
# 1,200	Pink	60727		60737		62967	

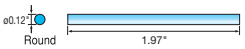

Grit	Color	ø0.12"
# 180	Ivory	63101
# 300	Brown	63102
# 400	Orange	63103
# 600	Black	63104
# 800	Blue	63105
# 1,000	White	63106
# 1,200	Pink	63107

**while supplies last

*Order by product code.

MACHINE TOOLS SPINDLES



1
EmaxEVO
ESPERT
ROTUS
IMPULSE
PRESTO II
Sheenus ZERO
2
iSpeed3
E2000 ø1.0"/ø0.98"/ø0.897"
E3000 – One Piece
E3000 – Modular ø1.18"
E3000 ø1.0"/ø0.98" ø0.897"
E3000 – 80,000rpm
E4000
3
MA ø0.897"
MA ø1.0" ø0.98"
MA ø1.18"
MS ø0.75" ø0.79"
MS ø0.87" ø0.91"
MS ø1.0" ø0.98"
4
HES
iSpeed5
HTS
HPS
PLANET
Xpeed
ABT
5
AIR LINE KIT
6
PARTS
7
TECHNICAL DATA
8
APPLICATION EXAMPLES
INDEX

LIVE LONG AND PROSPER



iSpeed3

Long Lasting Precision and Productivity

Outside Diameter ø19.05, ø20, ø22 and ø25 mm

1,000~80,000 rpm
Output 140W / 150W

One Piece Motor Spindle Type

- Shorter spindle length is suitable for compact sized automatic CNC lathes.
- The iSpeed3 series have sensorless motors and are equipped with super precision hybrid ceramic bearings for longer spindle life.

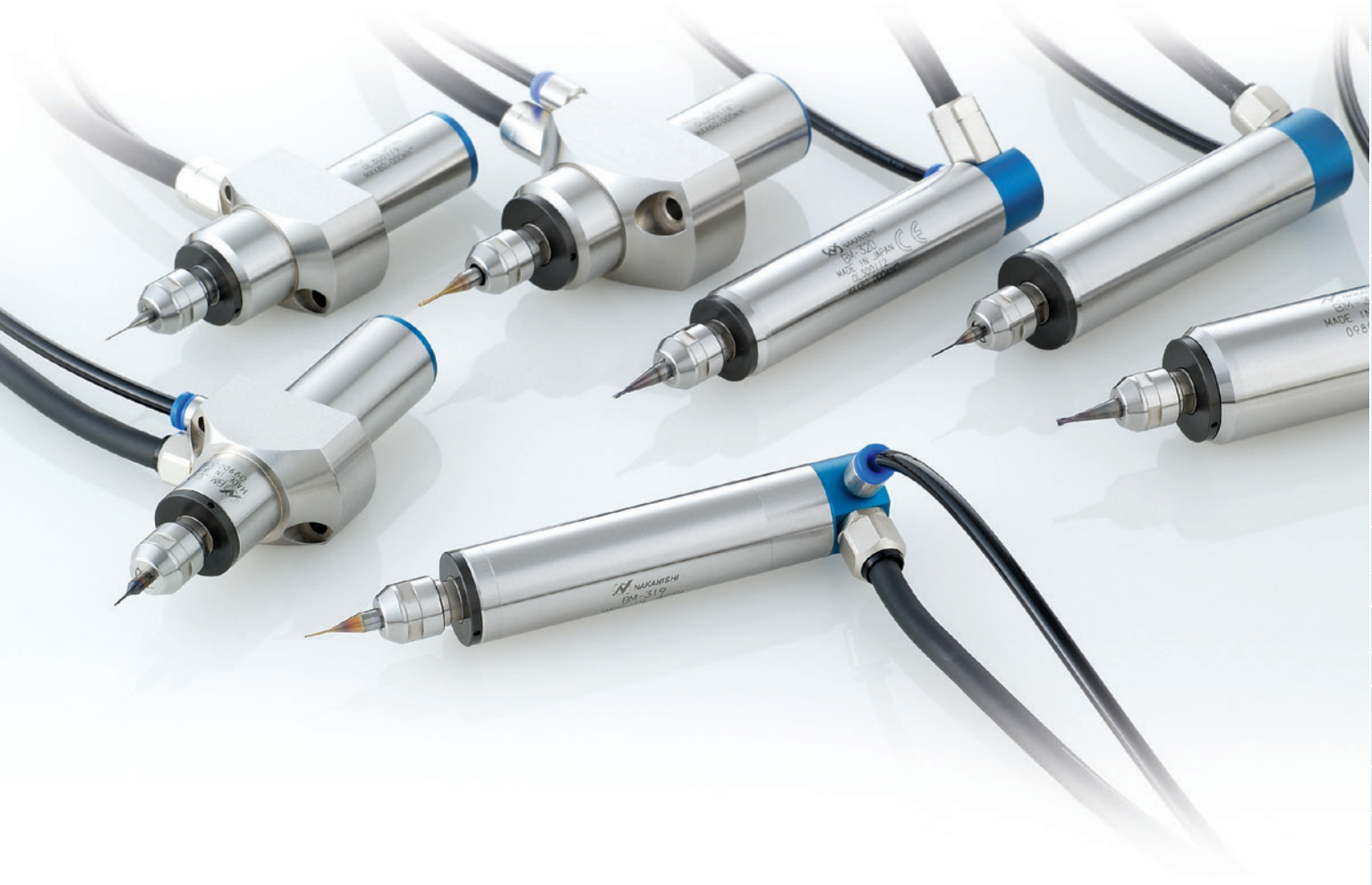

1
EmaxEVO
ESPERT
ROTUS
IMPULSE
PRESTO II
Sheenus ZERO
2
iSpeed3
E2000 ø1.0"/ø0.98"/ø0.897"
E3000 – One Piece
E3000 – Modular ø1.18"
ø1.0"/ø0.98" ø0.897"
E3000 – 80,000rpm
E4000
3
MA
ø0.897"
ø1.0" ø0.98"
ø1.18"
MS
ø0.75" ø0.79"
ø0.87" ø0.91"
ø1.0" ø0.98"
4
HES
iSpeed5
HTS
HPS
PLANET
Xpeed
ABT
5
AIR LINE KIT
6
PARTS
7
TECHNICAL DATA
8
APPLICATION EXAMPLES
INDEX

1
EmaxEVO
ESPERT
ROTUS
IMPULSE
PRESTO II
Sheenus ZERO
2
iSpeed3
E2000 ø1.0"/ø0.98"/ø0.897"
E3000 – One Piece
E3000 – Modular ø1.18"
ø1.0"/ø0.98" ø0.897"
E3000 – 80,000rpm
E4000
3
MA ø0.897" ø1.0" ø0.98" ø1.18"
MS ø0.75" ø0.79" ø0.87" ø0.91" ø1.0" ø0.98"
4
HES
iSpeed5
HTS
HPS
PLANET
Xpeed
ABT
5
AIR LINE KIT
6
PARTS
7
TECHNICAL DATA
8
APPLICATION EXAMPLES
INDEX

iSpeed3 Series System Chart

BM Type

Pages 2-p6~p9

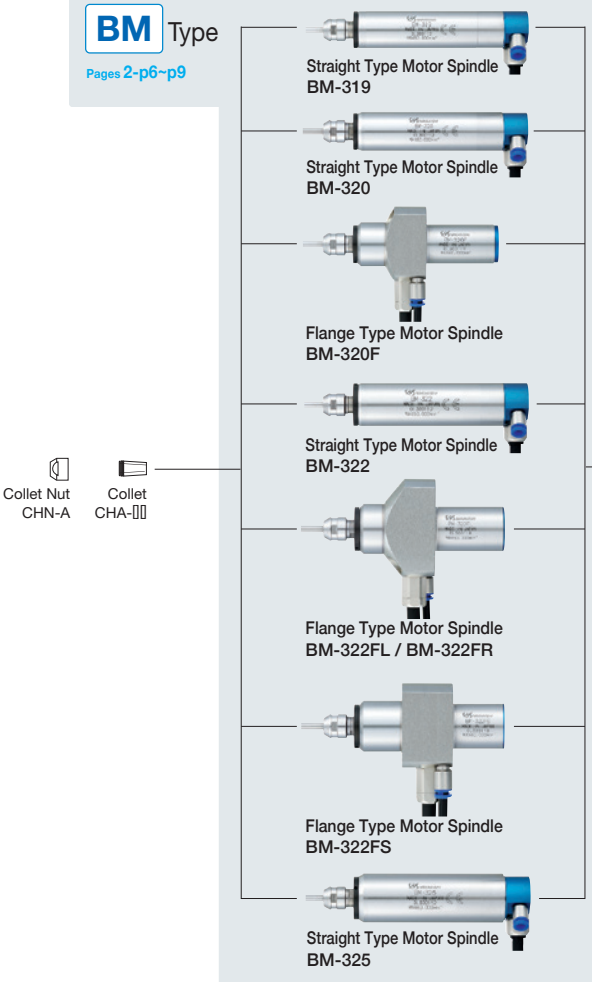

Collet Nut CHN-A

Collet CHA-▯▯

BMJ Type

Pages 2-p10~p11

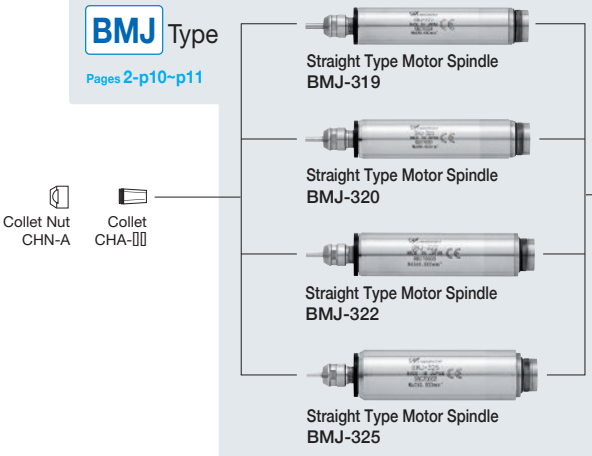

Collet Nut CHN-A

Collet CHA-▯▯

Automatic Control System Chart

Sequential Operation of up to 2 Motor / Spindles

＊ 2 motors can not be operated simultaneously.

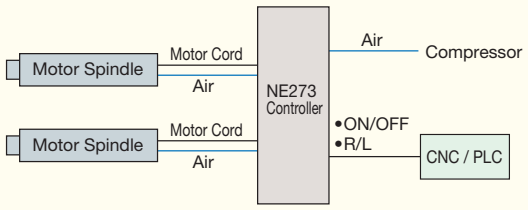

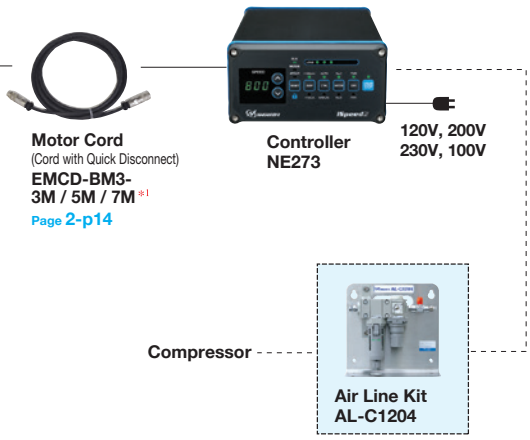

Motor Cord
(Cord with Quick Disconnect)
EMCD-BM3-3M / 5M / 7M＊1
Page 2-p14

Controller NE273

120V, 200V 230V, 100V

Compressor

Air Line Kit AL-C1204

＊Clean dry air is required.

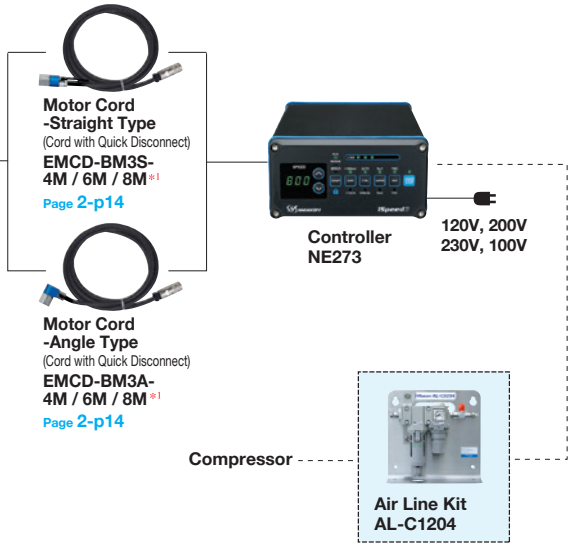

Motor Cord -Straight Type
(Cord with Quick Disconnect)
EMCD-BM3S-4M / 6M / 8M＊1
Page 2-p14

Motor Cord -Angle Type
(Cord with Quick Disconnect)
EMCD-BM3A-4M / 6M / 8M＊1
Page 2-p14

Controller NE273

120V, 200V 230V, 100V

Compressor

Air Line Kit AL-C1204

＊Clean dry air is required.

＊1 : Motor Cord is Sold Separately.

iSpeed3 Series System Chart

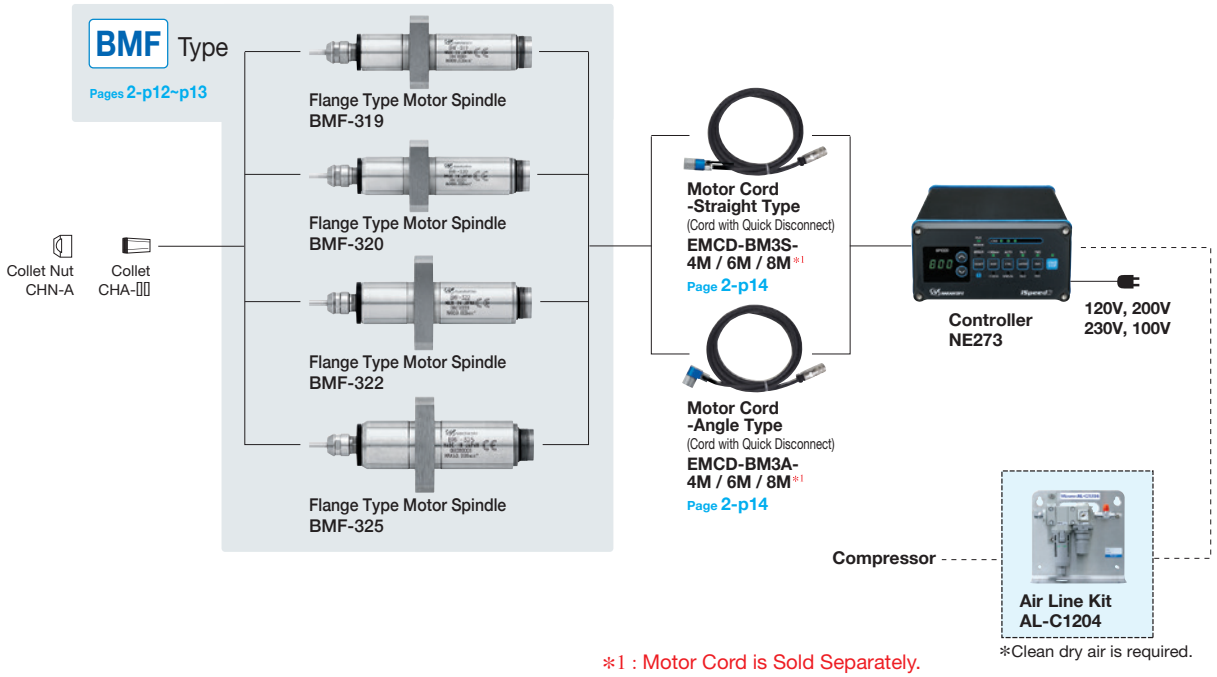

*1 : Motor Cord is Sold Separately.

*Clean dry air is required.

Features

Maximum 60,000 / 80,000 rpm

A maximum motor speed 80,000 rpm (BM-319, BM-320, BM-320F, BMJ-319, BMJ-320, BMF-319, BMF-320) is realized by using a high performance brushless motor and ceramic bearings. A maximum motor speed 60,000 rpm (BM-322, BM-322FL/BM-322FR, BM-322FS, BM-325, BMJ-322, BMJ-325, BMF-322, BMF-325) is realized by using a high performance brushless motor and ceramic bearings.

Maximum Motor Power Output 140W / 150W

Air-Cooling System

Air-cooled motor uses a small volume of air (1.0 CFM) to minimize heat buildup and allow continuous operation.
Air pressure required is 23-50 PSI.

Spindle Accuracy

Spindle Accuracy is within 1 μm (TIR).

High Rigidity, Short Body

iSpeed3 series uses a short body that is hardened and precision ground for excellent durability.

Motor Connector Attaches Directly to the Back of the Motor / Spindle.

Simple screw-lock connector makes changing motors extremely easy. Electric and Air feed incorporated into a single connector.

Torque Characteristics Graph

- BM-319
  BM-320
  BM-320F
  BMJ-319
  BMJ-320
  BMF-319
  BMF-320

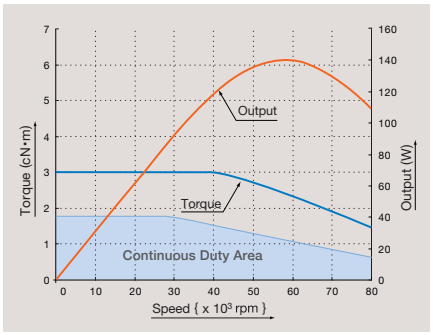

- BM-322
  BM-322FL
  BM-322FR
  BM-322FS
  BM-325
  BMJ-322
  BMJ-325
  BMF-322
  BMF-325

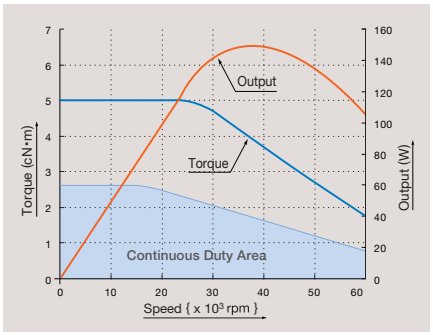

<Mounting Example>

Flange Type
Flange type for easy mounting.

ø19.05mm

BM-319FC

- Max. 80,000rpm
- Max. 140W





CITIZEN Cincom BL20 mounting example

ø22mm

BM-322FR

- Max. 60,000rpm
- Max. 150W



+ ø25.4 Bush

- O.D. : ø25.4mm
- Length : 33.5mm





CITIZEN Cincom C16 mounting example

Straight Type
Straight type for flexible mounting.

ø22mm

BM-322

- Max. 60,000rpm
- Max. 150W





STAR SB-16 mounting example

ø25mm

BM-325

- Max. 60,000rpm
- Max. 150W





TSUGAMI C300-III mounting example

- 1,000~80,000 rpm
- Maximum Output 150W
- External Input / Output Control Signal (Refer to 7-p24~p29 page of this catalog)

Product Code 8478 iSpeed3 CONTROLLER NE273 80,000 rpm

Power Source Required

Input power required is either 120VAC or 230VAC.

Input / Output Controls Signal Examples :

- **Input Signal Examples :**
  Start / Stop, Forward / Reverse, Pulse Speed Increase / Decrease, Speed Control, Error Code Release.
- **Output Signal Examples :**
  Error / Warning, At-Speed, RPM Monitoring, Motor Torque Output.

Motor Protection System

Motor Spindle is stopped safely and quickly. A Warning / Error LED is lit, Warning / Error Signal is output to an external device when a problem occurs.

Emergency Stop Circuit

The safety relay utilizes normally open contacts. The emergency stop signal lines must be supplied with power to hold the safety relay contacts closed and allow the controller to supply power to the motor. Any system errors, trouble with the machining center or the connections between the iSpeed3 Series controller and the machining center's controller will cause the relay contacts to open and the iSpeed3 Series motor to stop.



∗: Load LED



- : Continuous load area
- : Intermittent load area
- : Overload

Specifications

Product Name	: NE273
Power Source	: AC 120V 60Hz, AC 200V 50Hz-60Hz AC 230V 50Hz, AC 100V 50Hz-60Hz (4 types)
Motor Speed	: 1,000-80,000 rpm
Max. Output Power	: 150W (For ø22mm, ø25mm)
Rated Power Consumption	: 1.1A
Air Flow Volume	: 1.0CFM (23-50PSI)
Weight	: 7 lb. 11.46 oz.
Dimensions	: W5.67" x D9.21" x H2.91"

[1] Load LED (LOAD)* [2] Running LED (RUN) [3] Warning LED (WARNING) [4] Error LED (ERROR) [5] Motor Speed Switch (UP / DOWN)
[6] Rotating Speed Display (SPEED) [7] Error Reset Switch (RESET) [8] KEY HOLD Switch [9] DISP (DISPLAY) Switch [10] Control Switch (AUTO / MANUAL)
[11] Motor Selection Switch (No.1 / No.2) [12] Rotating Direction Selector Switch (FWD./REV.) [13] Start Switch (START)

iSpeed3 Controller

Product Code	Plug Type	Product Name	Standard Equipment · Accessories	
8478	120V	NE273	• Power Cord : 6 ft • Air Hose with filter : 6 ft • Motor Connector Cap : 2 pcs. • Bracket : 2 pcs. • Plate nut : 4 pcs. • M3 Bolt : 2 pcs. • Fuse : 2 pcs.	
8490	230V			

*Please refer to Technical Data 7-p24~p29 in detail about External Input-Output Connector.
*Please check the power source plug type and order accordingly.

Interface Cable
Page 2-p14



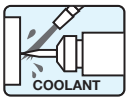

iSpeed3 Series can be used in conjunction with water or oil based coolants.

BM

Straight and Flange Type with Quick Disconnect

Features:

- Straight and Flange Type Motor/Spindles with pigtail for Motor cords with Quick-Disconnect.
- Flange Type Motor Spindles for machines with tool block with a blind hole.
- O.D. sizes for all Swiss type machines.

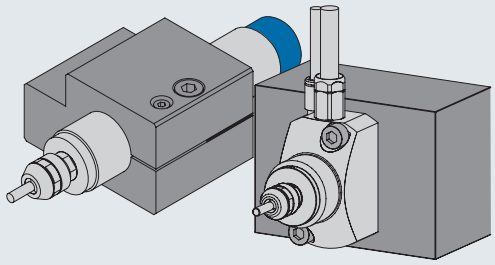

Product Code 7626 STRAIGHT TYPE MOTOR SPINDLE BM-319 80,000 rpm

Outside Diameter ø19.05mm (ø0.75")

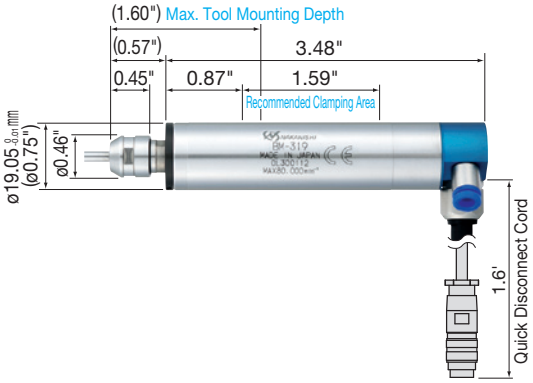

- Motor Speed ····· 1,000~80,000 rpm
- Spindle Accuracy ····· Within 1 µm
- Max. Output Power ····· 140W
- Standard Size Collet (CHA-3.175) ····· ø1/8"
- Weight ····· 7.41 oz.

< Optional >

- Collet (CHA-[][]) ····· ø0.5 mm~ø4.0 mm (See Page 6-p2 for details)
- Motor Cord ····· Length 10 ft, 16 ft, 22 ft

Straight Type Motor Spindle ø0.75"(ø19.05 mm)

Product Code	Product Name	Standard Equipment · Accessories	
7626	BM-319	• Collet ø1/8" (CHA-3.175) : 1 pc. • Collet Nut (CHN-A) : 1 pc. • Wrench (8 x 5), (9 x 11) : 1 pc. each	

Note : Motor Cord is sold separately.

Product Code 7628 STRAIGHT TYPE MOTOR SPINDLE BM-320 80,000 rpm

Outside Diameter ø20mm (ø0.79")

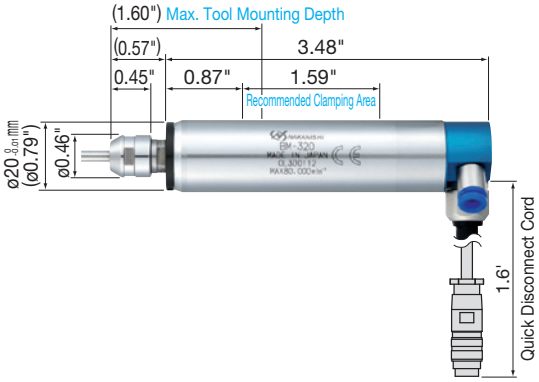

- Motor Speed ····· 1,000~80,000 rpm
- Spindle Accuracy ····· Within 1 µm
- Max. Output Power ····· 140W
- Standard Size Collet (CHA-3.175) ····· ø1/8"
- Weight ····· 8.11 oz.

< Optional >

- Collet (CHA-[][]) ····· ø0.5 mm~ø4.0 mm (See Page 6-p2 for details)
- Motor Cord ····· Length 10 ft, 16 ft, 22 ft

Straight Type Motor Spindle ø0.79"(ø20 mm)

Product Code	Product Name	Standard Equipment · Accessories	
7628	BM-320	• Collet ø1/8" (CHA-3.175) : 1 pc. • Collet Nut (CHN-A) : 1 pc. • Wrench (8 x 5), (9 x 11) : 1 pc. each	

Note : Motor Cord is sold separately.

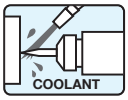

Product Code 7633 FLANGE TYPE MOTOR SPINDLE BM-320F 80,000 rpm

Outside Diameter ø20mm (ø0.79")

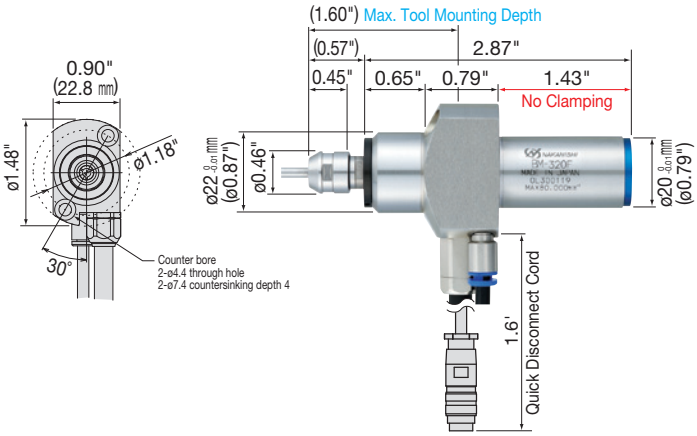

- Motor Speed ····· 1,000~80,000 rpm
- Spindle Accuracy ····· Within 1 µm
- Max. Output Power ····· 140W
- Standard Size Collet (CHA-3.175) ····· ø1/8"
- Weight ····· 9.52 oz.

< Optional >

- Collet (CHA-[][]) ····· ø0.5 mm~ø4.0 mm
  (See Page 6-p2 for details)
- Motor Cord ····· Length 10 ft, 16 ft, 22 ft

Flange Type Motor Spindle ø0.79"(ø20 mm)

Product Code	Product Name	Standard Equipment · Accessories	
7633	BM-320F	• Collet ø1/8" (CHA-3.175) : 1 pc. • Collet Nut (CHN-A) : 1 pc. • Wrench (8 x 5), (9 x 11) : 1 pc. each • Hex socket bolt (M4 x L25) : 2 pcs.	

Note : Motor Cord is sold separately.

Product Code 7635 STRAIGHT TYPE MOTOR SPINDLE BM-322 60,000 rpm

Outside Diameter ø22mm (ø0.87")

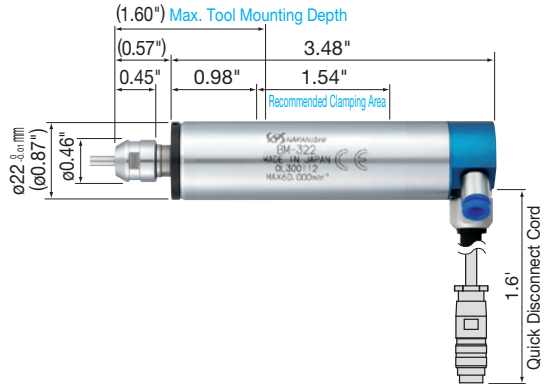

- Motor Speed ····· 1,000~60,000 rpm
- Spindle Accuracy ····· Within 1 µm
- Max. Output Power ····· 150W
- Standard Size Collet (CHA-3.175) ····· ø1/8"
- Weight ····· 8.82 oz.

< Optional >

- Collet (CHA-[][]) ····· ø0.5 mm~ø4.0 mm
  (See Page 6-p2 for details)
- Motor Cord ····· Length 10 ft, 16 ft, 22 ft

Straight Type Motor Spindle ø0.87"(ø22 mm)

Product Code	Product Name	Standard Equipment · Accessories	
7635	BM-322	• Collet ø1/8" (CHA-3.175) : 1 pc. • Collet Nut (CHN-A) : 1 pc. • Wrench (8 x 5), (9 x 11) : 1 pc. each	

Note : Motor Cord is sold separately.

Motor Cord
Page 2-p14



COOLANT

FLANGE TYPE MOTOR SPINDLE BM-322FL / BM-322FR 60,000 rpm

Outside Diameter **ø22mm (ø0.87")**

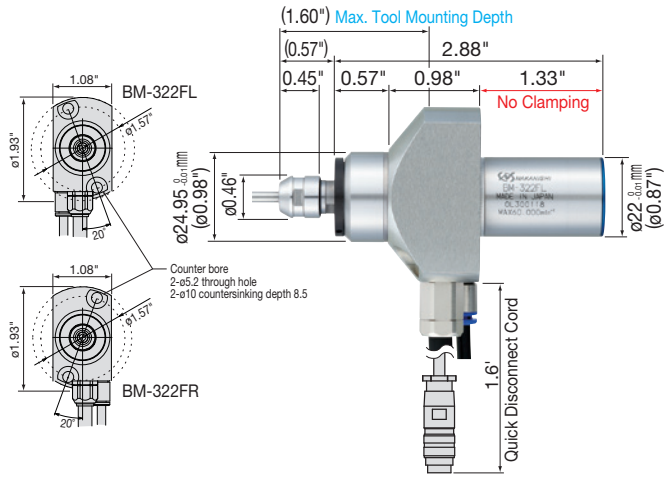

- Motor Speed ····· 1,000~60,000 rpm
- Spindle Accuracy ····· Within 1 µm
- Max. Output Power ····· 150W
- Standard Size Collet (CHA-3.175) ····· ø1/8"
- Weight ····· 12.70 oz.

< Optional >

- Collet (CHA-[][]) ····· ø0.5 mm~ø4.0 mm (See Page 6-p2 for details)
- Motor Cord ····· Length 10 ft, 16 ft, 22 ft

Flange Type Motor Spindle ø0.87"(ø22 mm)

Product Code	Product Name	Standard Equipment · Accessories	
7639	BM-322FL	• Collet ø1/8" (CHA-3.175) : 1 pc. • Collet Nut (CHN-A) : 1 pc. • Wrench (8 x 5), (9 x 11) : 1 pc. each • Hex socket bolt (M5 x L25) : 2 pcs.	
7641	BM-322FR		

Note : Motor Cord is sold separately.

IDLE GEAR BM3-IG for Applicable Swiss Machines

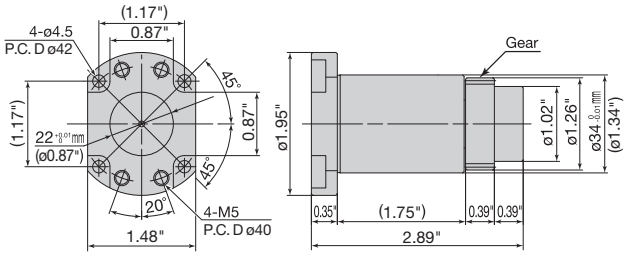

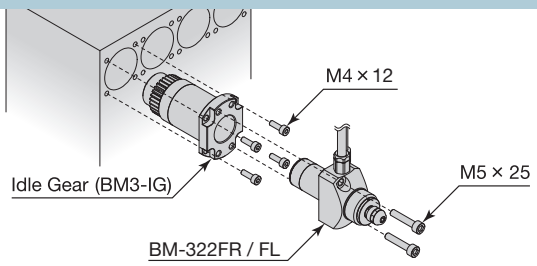

- This 34mm O.D. / 22mm I.D Sleeve with Idler Gear is designed to replace the Star CNC standard 8,000 rpm gear driven spindle with an NSK / BM-322FL 60,000 rpm Motor/Spindle. The rear mounted Idler Gear insures there is no gear interruption of the other Star live spindles. This sleeve is used on the 3,300 and 3,400 positions on the SJ20-R2&R3, SR20J and SR32J.

- Weight ····· 12.70 oz.
- Applicable Swiss Machines ····· Star Micronics Co., Ltd : SR-20J type C, SR-20R III, SR-32J, SR-20J type N, SR-32J type N

Idle Gear (for BM-322FL / BM-322FR)

Product Code	Product Name	Standard Equipment · Accessories	
8533	BM3-IG	• Hex socket bolt (M4 x L12) : 4 pcs.	

SPACER for BM-322FL / BM-322FR



- Inserting the spacer between the back of the flange and the face of the machines tool block moves the back of the Motor Spindle forward 10mm to eliminate gear face interference.

Spacer

Product Code	Product Name	Specifications	
1882	SP-22x10L	Dimensions ø22 (I.D.) x 10mm	

SPLIT BUSHING



- Hardened and ground split bushings are available in several sizes to fit most NSK Spindle/Motors.

Page 6-p19

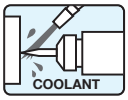

Product Code 7702 FLANGE TYPE MOTOR SPINDLE BM-322FS 60,000 rpm

Outside Diameter ø22mm (ø0.87")

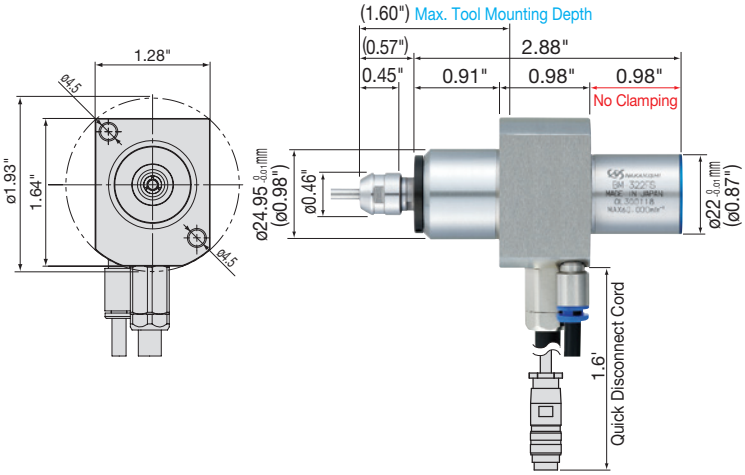

- Motor Speed ····· 1,000~60,000 rpm
- Spindle Accuracy ····· Within 1 µm
- Max. Output Power ····· 150W
- Standard Size Collet (CHA-3.175) ····· ø1/8"
- Weight ····· 14.46 oz.

< Optional >

- Collet (CHA-[]) ····· ø0.5 mm~ø4.0 mm (See Page 6-p2 for details)
- Motor Cord ····· Length 10 ft, 16 ft, 22 ft

Flange Type Motor Spindle ø0.87"(ø22 mm)

Product Code	Product Name	Standard Equipment · Accessories	
7702	BM-322FS	• Collet ø1/8" (CHA-3.175) : 1 pc. • Collet Nut (CHN-A) : 1 pc. • Wrench (8 x 5), (9 x 11) : 1 pc. each • Hex socket bolt (M4 x L35) : 2 pcs.	

Note : Motor Cord is sold separately.

Product Code 7637 STRAIGHT TYPE MOTOR SPINDLE BM-325 60,000 rpm

Outside Diameter ø25mm (ø0.98")

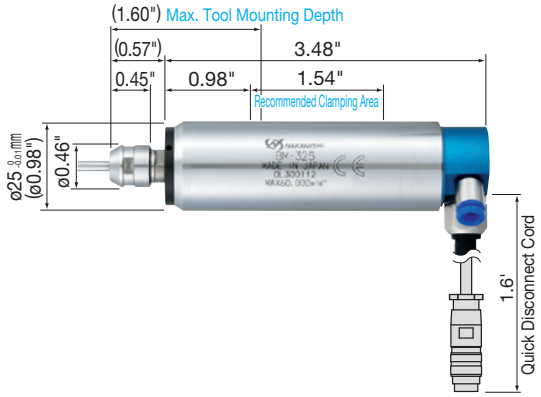

- Motor Speed ····· 1,000~60,000 rpm
- Spindle Accuracy ····· Within 1 µm
- Max. Output Power ····· 150W
- Standard Size Collet (CHA-3.175) ····· ø1/8"
- Weight ····· 11.29 oz.

< Optional >

- Collet (CHA-[]) ····· ø0.5 mm~ø4.0 mm (See Page 6-p2 for details)
- Motor Cord ····· Length 10 ft, 16 ft, 22 ft

Straight Type Motor Spindle ø0.98"(ø25 mm)

Product Code	Product Name	Standard Equipment · Accessories	
7637	BM-325	• Collet ø1/8" (CHA-3.175) : 1 pc. • Collet Nut (CHN-A) : 1 pc. • Wrench (8 x 5), (9 x 11) : 1 pc. each • Hex socket bolt (M5 x L16) : 2 pcs.	

Note : Motor Cord is sold separately.

Motor Cord
Page 2-p14



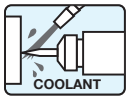

BMJ

Straight Type without Motor Cord

Features:

- Straight Motor/Spindles with O.D. sizes for all Swiss type machines.
- Uses a Straight or 90-Degree Motor Cord that attach to the rear of the Motor/Spindle.
- Ability to insert the Motor/Spindle from the front or rear of the tool block.

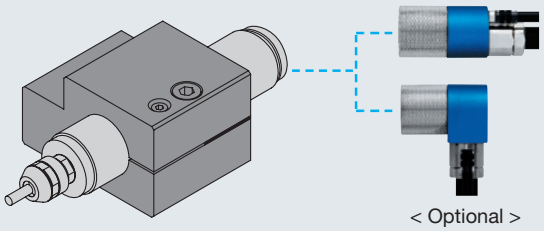

< Optional >
Motor Cord

Product Code 7651 STRAIGHT TYPE MOTOR SPINDLE BMJ-319 80,000 rpm

Outside Diameter **ø19.05mm (ø0.75")**

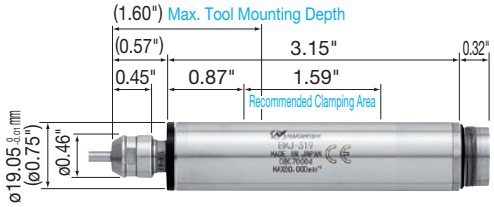

- Motor Speed ····· 1,000~80,000 rpm
- Spindle Accuracy ····· Within 1 µm
- Max. Output Power ····· 140W
- Standard Size Collet (CHA-3.175) ····· ø1/8"
- Weight ····· 5.11 oz.

< Optional >

- Collet (CHA-[][]) ····· ø0.5 mm~ø4.0 mm (See Page 6-p2 for details)
- Motor Cord ····· Length 13 ft, 19 ft, 26 ft

Straight Type Motor Spindle ø0.75"(ø19.05 mm)

Product Code	Product Name	Standard Equipment · Accessories	
7651	BMJ-319	• Collet ø1/8" (CHA-3.175) : 1 pc. • Collet Nut (CHN-A) : 1 pc. • Wrench (8 x 5), (9 x 11) : 1 pc. each	

Note : Motor Cord is sold separately.

Product Code 7652 STRAIGHT TYPE MOTOR SPINDLE BMJ-320 80,000 rpm

Outside Diameter **ø20mm (ø0.79")**

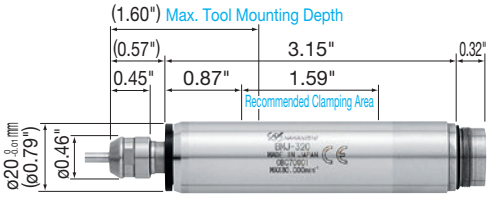

- Motor Speed ····· 1,000~80,000 rpm
- Spindle Accuracy ····· Within 1 µm
- Max. Output Power ····· 140W
- Standard Size Collet (CHA-3.175) ····· ø1/8"
- Weight ····· 5.64 oz.

< Optional >

- Collet (CHA-[][]) ····· ø0.5 mm~ø4.0 mm (See Page 6-p2 for details)
- Motor Cord ····· Length 13 ft, 19 ft, 26 ft

Straight Type Motor Spindle ø0.79"(ø20 mm)

Product Code	Product Name	Standard Equipment · Accessories	
7652	BMJ-320	• Collet ø1/8" (CHA-3.175) : 1 pc. • Collet Nut (CHN-A) : 1 pc. • Wrench (8 x 5), (9 x 11) : 1 pc. each	

Note : Motor Cord is sold separately.

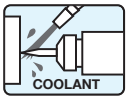

Product Code 7653 STRAIGHT TYPE MOTOR SPINDLE BMJ-322 60,000 rpm

Outside Diameter ø22mm (ø0.87")



- Motor Speed ····· 1,000~60,000 rpm
- Spindle Accuracy ····· Within 1 µm
- Max. Output Power ····· 150W
- Standard Size Collet (CHA-3.175) ····· ø1/8"
- Weight ····· 6.70 oz.

< Optional >

- Collet (CHA-[][]) ····· ø0.5 mm~ø4.0 mm (See Page 6-p2 for details)
- Motor Cord ····· Length 13 ft, 19 ft, 26 ft

Straight Type Motor Spindle ø0.87"(ø22 mm)

Product Code	Product Name	Standard Equipment · Accessories	
7653	BMJ-322	• Collet ø1/8" (CHA-3.175) : 1 pc. • Collet Nut (CHN-A) : 1 pc. • Wrench (8 x 5), (9 x 11) : 1 pc. each	

Note : Motor Cord is sold separately.

Product Code 7654 STRAIGHT TYPE MOTOR SPINDLE BMJ-325 60,000 rpm

Outside Diameter ø25mm (ø0.98")

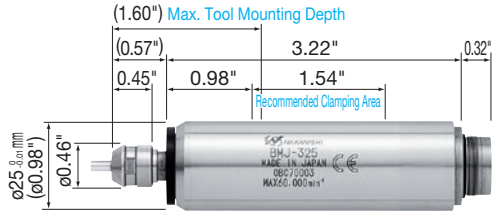

- Motor Speed ····· 1,000~60,000 rpm
- Spindle Accuracy ····· Within 1 µm
- Max. Output Power ····· 150W
- Standard Size Collet (CHA-3.175) ····· ø1/8"
- Weight ····· 8.99 oz.

< Optional >

- Collet (CHA-[][]) ····· ø0.5 mm~ø4.0 mm (See Page 6-p2 for details)
- Motor Cord ····· Length 13 ft, 19 ft, 26 ft

Straight Type Motor Spindle ø0.98"(ø25 mm)

Product Code	Product Name	Standard Equipment · Accessories	
7654	BMJ-325	• Collet ø1/8" (CHA-3.175) : 1 pc. • Collet Nut (CHN-A) : 1 pc. • Wrench (8 x 5), (9 x 11) : 1 pc. each	

Note : Motor Cord is sold separately.

Straight Type

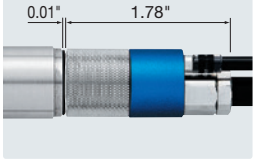

Angle Type

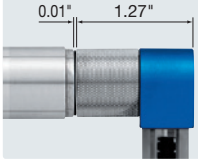

Motor Cord
Page 2-p14



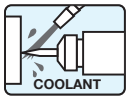

BMF

Fixed Flange Type without Motor Cord

Features:

- Fixed Flange with Straight or 90-Degree Motor Cord that attach to the rear of the Motor/Spindle.
- Flange mount eliminates the need to clamp on the O.D.
- O.D. sizes for all Swiss type machines.

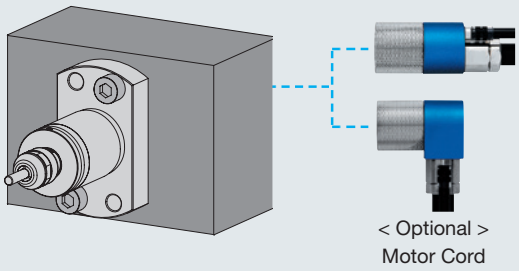

Product Code 7655 FLANGE TYPE MOTOR SPINDLE BMF-319 80,000 rpm

Outside Diameter ø19.05mm (ø0.75")

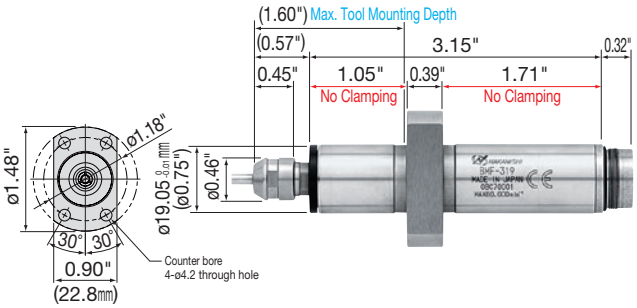

- Motor Speed ····· 1,000~80,000 rpm
- Spindle Accuracy ····· Within 1 µm
- Max. Output Power ····· 140W
- Standard Size Collet (CHA-3.175) ····· ø1/8"
- Weight ····· 6.35 oz.

< Optional >

- Collet (CHA-[][]) ····· ø0.5 mm~ø4.0 mm (See Page 6-p2 for details)
- Motor Cord ····· Length 13 ft, 19 ft, 26 ft

Flange Type Motor Spindle ø0.75"(ø19.05 mm)

Product Code	Product Name	Standard Equipment · Accessories	
7655	BMF-319	• Collet ø1/8" (CHA-3.175) : 1 pc. • Collet Nut (CHN-A) : 1 pc. • Wrench (8 x 5), (9 x 11) : 1 pc. each • Hex socket bolt (M4 x L16) : 2 pcs.	

Note : Motor Cord is sold separately.

Product Code 7656 FLANGE TYPE MOTOR SPINDLE BMF-320 80,000 rpm

Outside Diameter ø20mm (ø0.79")

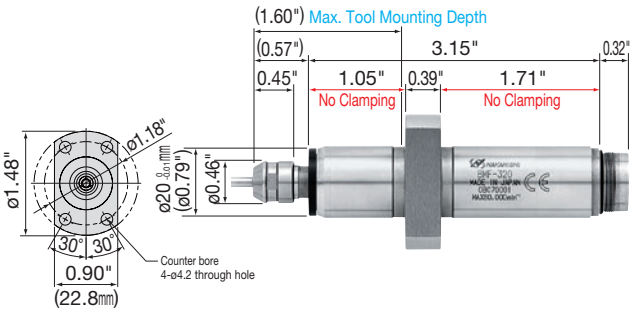

- Motor Speed ····· 1,000~80,000 rpm
- Spindle Accuracy ····· Within 1 µm
- Max. Output Power ····· 140W
- Standard Size Collet (CHA-3.175) ····· ø1/8"
- Weight ····· 6.88 oz.

< Optional >

- Collet (CHA-[][]) ····· ø0.5 mm~ø4.0 mm (See Page 6-p2 for details)
- Motor Cord ····· Length 13 ft, 19 ft, 26 ft

Flange Type Motor Spindle ø0.79"(ø20 mm)

Product Code	Product Name	Standard Equipment · Accessories	
7656	BMF-320	• Collet ø1/8" (CHA-3.175) : 1 pc. • Collet Nut (CHN-A) : 1 pc. • Wrench (8 x 5), (9 x 11) : 1 pc. each • Hex socket bolt (M4 x L16) : 2 pcs.	

Note : Motor Cord is sold separately.

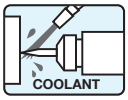

Product Code 7657 FLANGE TYPE MOTOR SPINDLE BMF-322 60,000 rpm

Outside Diameter ø22mm (ø0.87")

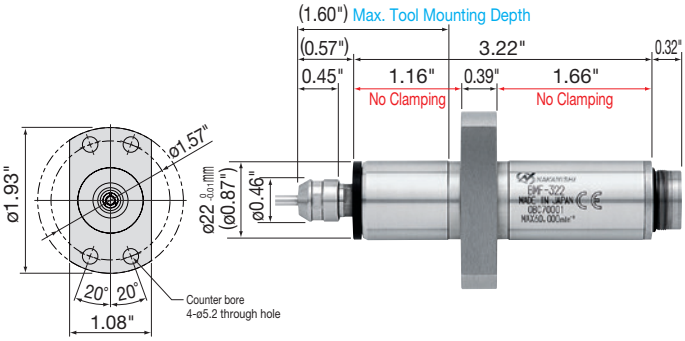

- Motor Speed ····· 1,000~60,000 rpm
- Spindle Accuracy ····· Within 1 µm
- Max. Output Power ····· 150W
- Standard Size Collet (CHA-3.175) ····· ø1/8"
- Weight ····· 8.82 oz.

< Optional >

- Collet (CHA-[][]) ····· ø0.5 mm~ø4.0 mm (See Page 6-p2 for details)
- Motor Cord ····· Length 13 ft, 19 ft, 26 ft

Flange Type Motor Spindle ø0.87"(ø22 mm)

Product Code	Product Name	Standard Equipment · Accessories	
7657	BMF-322	• Collet ø1/8" (CHA-3.175) : 1 pc. • Collet Nut (CHN-A) : 1 pc. • Wrench (8 x 5), (9 x 11) : 1 pc. each • Hex socket bolt (M5 x L16) : 2 pcs.	

Note : Motor Cord is sold separately.

Product Code 7658 FLANGE TYPE MOTOR SPINDLE BMF-325 60,000 rpm

Outside Diameter ø25mm (ø0.98")

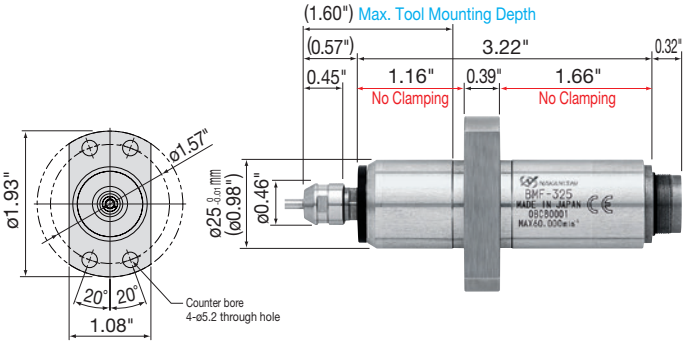

- Motor Speed ····· 1,000~60,000 rpm
- Spindle Accuracy ····· Within 1 µm
- Max. Output Power ····· 150W
- Standard Size Collet (CHA-3.175) ····· ø1/8"
- Weight ····· 10.76 oz.

< Optional >

- Collet (CHA-[][]) ····· ø0.5 mm~ø4.0 mm (See Page 6-p2 for details)
- Motor Cord ····· Length 13 ft, 19 ft, 26 ft

Flange Type Motor Spindle ø0.98"(ø25 mm)

Product Code	Product Name	Standard Equipment · Accessories	
7658	BMF-325	• Collet ø1/8" (CHA-3.175) : 1 pc. • Collet Nut (CHN-A) : 1 pc. • Wrench (8 x 5), (9 x 11) : 1 pc. each • Hex socket bolt (M5 x L16) : 2 pcs.	

Note : Motor Cord is sold separately.

Straight Type

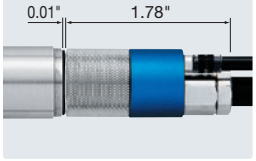

Angle Type

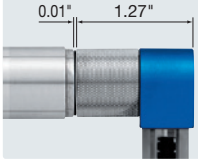

Motor Cord
Page 2-p14



MOTOR CORD for BM Type

Product	Product Code	Description · Product Name	Length	Std. Accessories	Fit to
	9261	Motor Cord 3M EMCD-BM3-3M	10 ft (3.0m)	• Air Hose • Connector Cap (Provided)	BM-319 · BM-320 BM-320F · BM-322 BM-322FL · BM-322FR BM-322FS · BM-325
	9262	Motor Cord 5M EMCD-BM3-5M	16 ft (5.0m)		
	9263	Motor Cord 7M EMCD-BM3-7M	22 ft (7.0m)		

MOTOR CORD for BMJ Type & BMF Type

Product	Product Code	Description · Product Name	Length	Std. Accessories	Fit to
	9264	Motor Cord 4M EMCD-BM3S-4M	13 ft (4.0m)	• Air Hose • Connector Cap (Provided)	BMJ-319 · BMJ-320 BMJ-322 · BMJ-325 BMF-319 · BMF-320 BMF-322 · BMF-325
	9265	Motor Cord 6M EMCD-BM3S-6M	19 ft (6.0m)		
	9266	Motor Cord 8M EMCD-BM3S-8M	26 ft (8.0m)		

Product	Product Code	Description · Product Name	Length	Std. Accessories	Fit to
	9267	Motor Cord 4M EMCD-BM3A-4M	13 ft (4.0m)	• Air Hose • Connector Cap (Provided)	BMJ-319 · BMJ-320 BMJ-322 · BMJ-325 BMF-319 · BMF-320 BMF-322 · BMF-325
	9268	Motor Cord 6M EMCD-BM3A-6M	19 ft (6.0m)		
	9269	Motor Cord 8M EMCD-BM3A-8M	26 ft (8.0m)		

25 Pin INTERFACE CABLE



●3 Meter long Interface Cable provides a DB25 Male Connector at one end and a blunt cut on the opposite end. Includes a pin-out wire diagram for easy interfacing of I/O signals from any NSK Control to a CNC Control.

25 Pin Interface Cable

Product Code	Product Name		
DB25M	DB25M	For NSK Control Connector A	

15 Pin INTERFACE CABLE



●3 Meter long Interface Cable provides a DB15 Male Connector at one end and a blunt cut on the opposite end. Includes a pin-out wire diagram for easy interfacing of the (OP1) “E-Stop Input Circuit” and “Safety Relay Circuit” from the NSK Control to a CNC Control.

15 Pin Interface Cable

Product Code	Product Name		
DB15M	DB15M	For NSK Control Connector B	

Product Code 4504 AIR LINE KIT AL-C1204

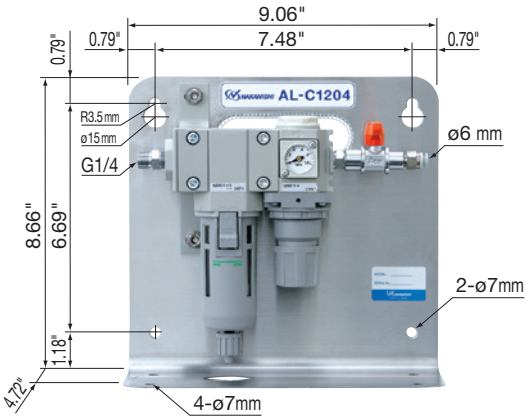

● The AL-C1204 Air Line Kit is designed to deliver clean, dry air to Electric Motors via the Controller. The filter removes small amounts of debris while the adjustable regulator provides the correct air pressure for cooling and purging.

Air Line Kit (For ø6 mm Hose · **Filter Mesh 0.3 µm**)

Product Code	Product Name	Standard Equipment · Accessories	
4504	AL-C1204	• Air Filter • Air Regulator • Air Pressure Gauge • Air ON-OFF Valve • Hose for Piping (K-275) : 6 ft	

1
EmaxEVO
ESPERT
ROTUS
IMPULSE
PRESTO II
Sheenus ZERO
2
iSpeed3
E2000 ø1.0"/ø0.98"/ø0.897"
E3000 – One Piece
E3000 – Modular ø1.18"
ø1.0"/ø0.98" ø0.897"
E3000 – 80,000rpm
E4000
3
MA
ø0.897"
ø1.0" ø0.98"
ø1.18"
MS
ø0.75" ø0.79"
ø0.87" ø0.91"
ø1.0" ø0.98"
4
HES
iSpeed5
HTS
HPS
PLANET
Xpeed
ABT
5
AIR LINE KIT
6
PARTS
7
TECHNICAL DATA
8
APPLICATION EXAMPLES
INDEX

E-speed

E2000 SERIES

1,000~50,000 rpm
Output 200W

Outside Diameter
ø0.897", ø0.98", ø1.0"
(ø22.8, ø25, ø25.4 mm)

- The E2000 Series is capable of up to 50,000 rpm and employs a high-speed, ultra-quiet brushless motor.
- High-performance system and state of the art design allows high-speed machining and a variety of safety functions.



E3000 SERIES

1,000~60,000 rpm
Output 350W

Outside Diameter [One Piece Type]
ø0.79", ø0.98", ø1.18"
(ø20, ø25, ø30 mm)

Outside Diameter [Modular Type]
ø0.897", ø0.98", ø1.0", ø1.18"
(ø22.8, ø25, ø25.4, ø30 mm)



ø25mm (ø0.98")

1,000~80,000 rpm
Output 350W

Outside Diameter [Modular Type]
ø1.18" (ø30 mm)
ø1.97" (ø50 mm) -Air Bearing



E4000 SERIES

1,000~40,000 rpm Max.
Output 1,200W

Outside Diameter
ø1.57"
(ø40 mm)

- Up to ø0.375" Collet Capacity
- Designed for use on CNC Lathes, Robots and Special Application Machines for precision milling, drilling grinding, slitting and deburring applications.



Outside Diameter ø1.0", ø0.98"(ø25.4, ø25 mm)

1,000~50,000 rpm
Output 200W

- **Modular Type**

Outside Diameter ø0.897"(ø22.8 mm)

1,000~50,000 rpm
Output 200W

- **Modular Type**

Angle Spindle
(Modular Type)
Capable of working on corners difficult to work with straight type and drilling and milling on side face. Three type Angle Head Sizes available.



Straight Spindle
(Modular Type)
Suitable for small diameter milling & drilling, slitting, chamfer and grinding operation.

1
EmaxEVO
ESPERT
ROTUS
IMPULSE
PRESTO II
Sheenus ZERO
2
iSpeed3
E2000 ø1.0"/ø0.98"/ø0.897"
E3000 – One Piece
E3000 – Modular ø1.18"
ø1.0"/ø0.98" ø0.897"
E3000 – 80,000rpm
E4000
3
MA
ø0.897"
ø1.0" ø0.98"
ø1.18"
MS
ø0.75" ø0.79"
ø0.87" ø0.91"
ø1.0" ø0.98"
4
HES
iSpeed5
HTS
HPS
PLANET
Xpeed
ABT
5
AIR LINE KIT
6
PARTS
7
TECHNICAL DATA
8
APPLICATION EXAMPLES
INDEX

1
EmaxEVO
ESPERT
ROTUS
IMPULSE
PRESTO II
Sheenus ZERO
2
iSpeed3
E2000 ø1.0"/ø0.98"/ø0.897"
E3000 – One Piece
E3000 – Modular ø1.18"
ø1.0"/ø0.98" ø0.897"
E3000 – 80,000rpm
E4000
3
MA
ø0.897"
ø1.0" ø0.98"
ø1.18"
MS
ø0.75" ø0.79"
ø0.87" ø0.91"
ø1.0" ø0.98"
4
HES
iSpeed5
HTS
HPS
PLANET
Xpeed
ABT
5
AIR LINE KIT
6
PARTS
7
TECHNICAL DATA
8
APPLICATION EXAMPLES
INDEX

E2000 Series ø1.0", ø0.98"(ø25.4, ø25 mm) System Chart

● Interchangeable with a variety of attachments depending on the application.

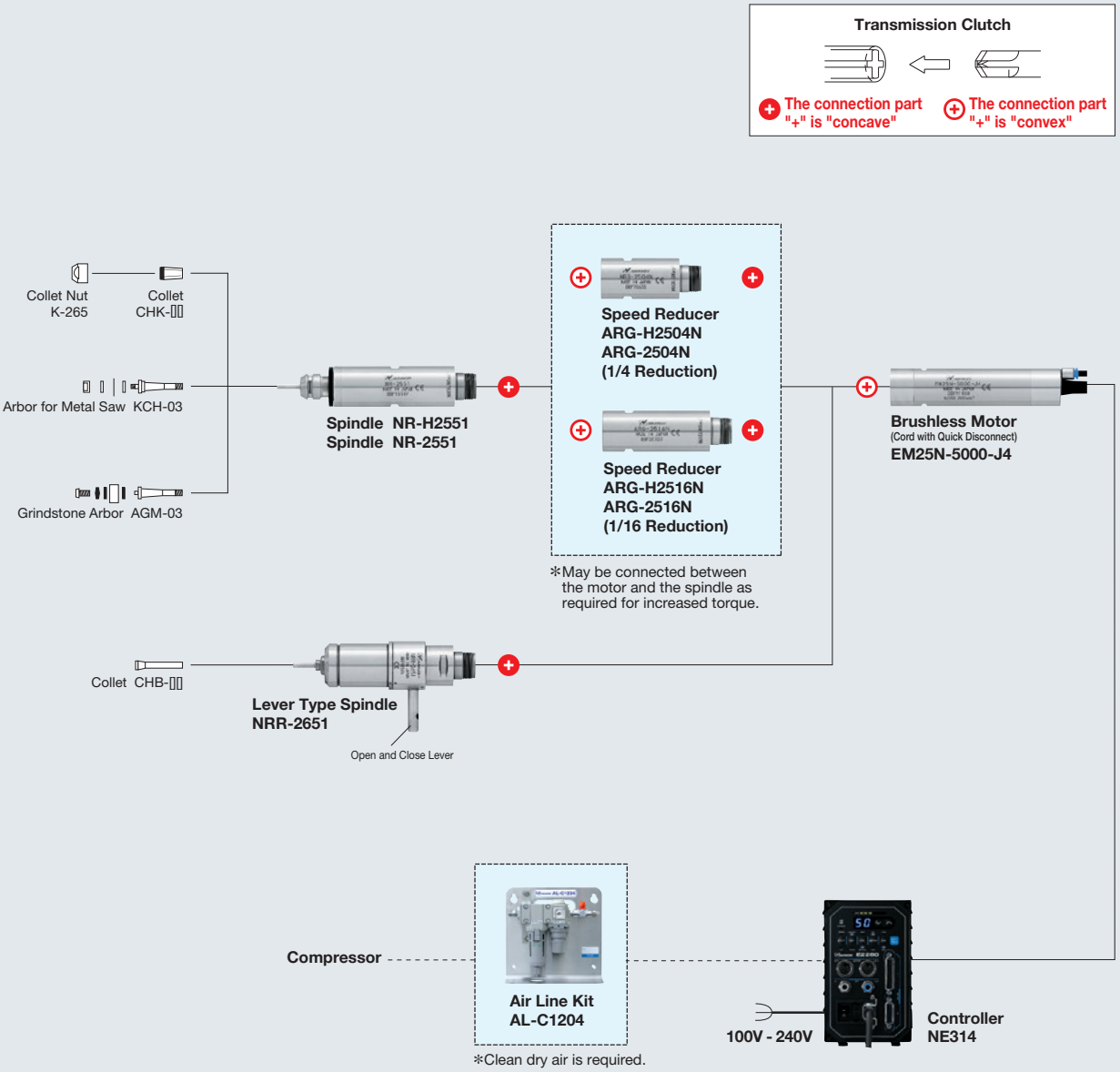

*Do not exceed the maximum motor speed recommendation for the spindles.
Excess speed will dramatically reduce bearing life.

Features of E2000 Series

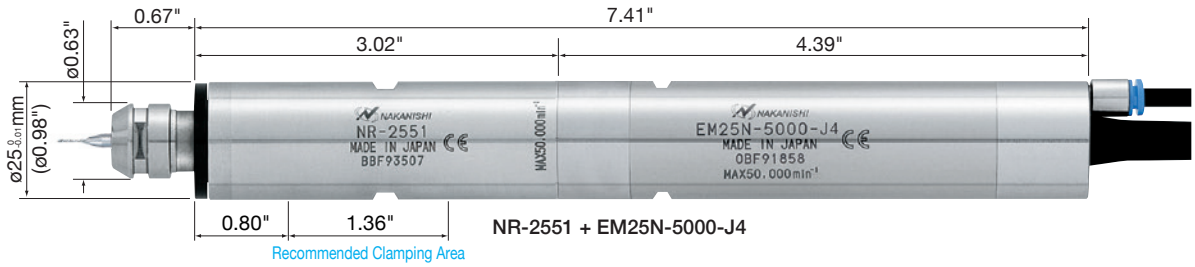

NR-2551 + EM25N-5000-J4

Maximum Output 200W

The E2000 Series motor is a brushless DC motor utilizing hall elements and rare-earth magnets in the rotor. The Motor develops 200W.

Brushless Motor

The brushless DC Motor designs allows for excellent reliability and durability. The brushless DC Motor can be steplessly controlled up to 50,000 rpm.

Air-Cooling System

Air-cooled motor uses a small volume of dry air (1.0 CFM) to minimize heat buildup and allow continuous operation.
Air pressure required is 36-44 PSI.

Wide Variety of Interchangeable Spindles are Available

Straight-type spindles are available along with speed reducers to increase torque as well as 90° degree spindles to provide outstanding system flexibility.

System Protection Function

The E2000 Series is equipped with a protective function to stop the spindle rotation automatically in case of overload ensuring safe and smooth operation. When the protective circuit is activated, an error code is shown on the digital display. In case of an air supply failure, the protective circuit limits the motor/spindle to 30,000 rpm maximum.

Centering Mode Switch

This switch activates the centering mode, which maintains a constant 500 rpm spindle speed for centering the tool.

Operating Parameters

The operating parameters can be preset for : *Fixed Motor Speed *Maximum Motor Speed *Operating without Air and several other functions.

2 Motors can be connected (No Simultaneous Operation)

Up to 2 motors may be connected to 1 controller and operated sequentially making this system very easy to use when multiple live tools are required.

Compact Vertical Controller

The compact, vertical design of the controller makes it extremely easy to mount in cramped control cabinets.

Power Source Auto Detection

The controller is capable of being connected to AC100V or AC240V power sources. The Auto Sensing feature reduces installation time and eliminates the possibility of connecting the incorrect voltage.

Stainless Steel Body

The housings of the motor and spindle are made from precision ground stainless steel (SUS416).

Emergency Stop Function

By setting a parameter, an emergency stop signal can be activated. Using the open detection signal of the motor power line through the safety relay, the E2000 controller can establish a safe operating system.

Automatic Control System Chart

Sequential Operation of up to 2 Motor / Spindles

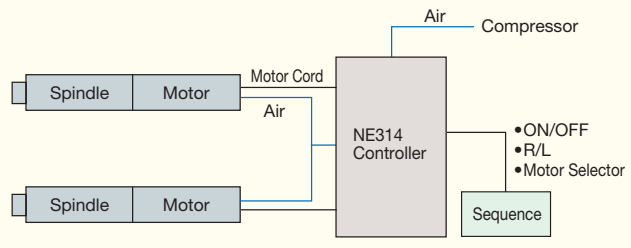

*The E2000 Series controller has the ability to control up to 2 motors sequentially. 2 motors can not be run simultaneously.

High Precision and High-Performance Controller

- **High-Performance Electric Circuit**
  'High grade feedback loop maintains constant spindle speed even if load is varied', and 'Gentle start/Quick stop functions' are provided.
- **Warning/Error Functions**
  Motor/Spindle is stopped when an Error or Warning Code has been detected and indicated on the LED Display. An output signal can be sent to the CNC control.
  Warnings Codes : i.e. • High Air Pressure • Low Air Pressure • Controller Overheat • Motor Overload
  Errors Codes : i.e. • Rotor Lock • Overheat • Overload • Torque Load • External Signal Error • E-Stop • Incompatible Motor
- **Selector Function**
  Max. 2 motors can be controlled sequentially. 2 motors can not be run simultaneously.
- **Motor Speed Display**
  Motor speed is displayed precisely and digitally.
- **LOAD Monitor LED**
  Motor load is displayed by 6 LED's to indicate load level.
- **External Input-Output Signals**
  (Refer to Technical Data 7-p10~p17 in detail)
  Motor/Spindle can be controlled and monitored by external input-output signals. Controls : Start/Stop, Motor Speed Control, FWD./REV. Rotation and etc. Monitor : While Rotating, Rotation Pulse, Controller Power Source Detection, AUTO Mode, Motor Speed Voltage, Torque Load etc.
- **Selection of Illumination Brightness**



Select the brightness of the blue illumination from 4 patterns.

E2000 Series Combination Example — 50,000 rpm



Controller Specifications

Product Name	NE314
Power Source	AC 100 - 240V, 50-60 Hz
	1 Phase
Power Consumption	1.45A
Weight	4 lb. 13.60 oz.
Dimensions	W4.25" x D6.60" x H6.93"

Motor & Spindle

Motor	EM25N-5000-J4
Spindle	NR-2551
Speed	1,000~50,000 rpm 500 rpm : for centering
Weight	1 lb. 1.74 oz. (w/o motor cable)
Dimensions	ø0.98" x 7.41"

E2000, NR-2551 Combination Example

Product Code	Product Name	Product	
7720	NE314	Controller	
AS88322P	EM25N-5000-J4	Brushless Motor	
AS81820P	NR-H2551	Spindle	
4504	AL-C1204	Air Line Kit	

- 1,000~50,000 rpm
- Maximum Output 200W
- 2 motors can be connected (No Simultaneous Operation).
- External Input / Output Control Signal (Refer to 7-p10~p17 page of this catalog)

Product Code 7720 E2000 CONTROLLER NE314 50,000 rpm

※: Load Monitor

LOAD

: Continuous load area
: Intermittent load area
: Overload

Motor Connector No.1, No.2
Air Output Joint
Air Input Joint
External Input / Output Connector A, B
Fixing Power Cord Hook Bar
Power Cord Hook
Main Power Switch
Main Power Intake with Power Supply Fuses



[1] Rotating LED (RUN)
[2] Warning LED (WARNING)
[3] Error LED (ERROR)
[4] Error Reset Button (RESET)
[5] KEY HOLD LED Button
[6] Digital Speed Indicator
[7] Load Monitor (LOAD)
[8] Motor Speed Adjustment Button (SPEED)
[9] DISPLAY (DISP) Button
[10] Control Button (CTRL)
[11] Motor Spindle Selection Button (MOTOR)
[12] Rotation Direction Button (DIR)
[13] Start / Stop Button (START / STOP)

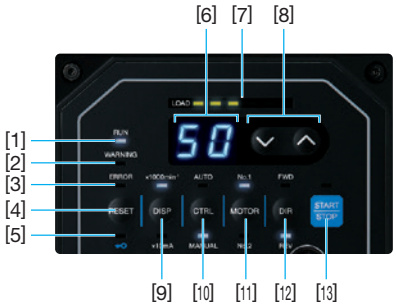

Specifications

Product Name	: NE314
Power Source	: AC 100-240V, 50-60 Hz 1 Phase
Power Consumption	: 1.45A
Weight	: 4 lb. 13.60 oz.
Dimensions	: W4.25" x D6.60" x H6.93"

E2000 Controller

Product Code	Plug Type	Product Name	Standard Equipment · Accessories	
7720	100 - 240V (Without Plug) 	NE314	• Power Cord • ø6mm Air Hose with Filter • Power Cord Hook • Reducer • Connector Cap (Provided) : 2 pcs. • Connector Cover A / B (Provided) • Bracket : 2 pcs. • Air branching joint : 1 pc. • Fuse : 2 pcs. • Mounting Screw : 6 pcs.	

*Please refer to Technical Data 7-p10~p17 in detail about External Input-Output Connector.
*AC100-240V for international operation.

Interface Cable
Page 2-p24



● Mounting Bracket

Back Mounting

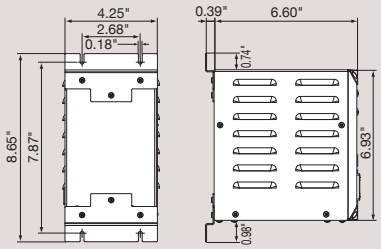

Bottom Mounting

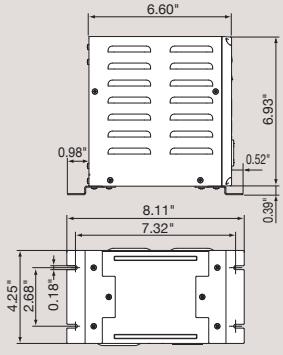



*Order by product code. 2–p21

EM	25	N	-	5000	-	J4	N = ⊕Clutch
Product Symbol	Outside Diameter	⊕Clutch		Max. Motor Speed		Cord Variety	

New Model Name for E2000 Series Motor

Product Code AS88322P — BRUSHLESS MOTOR EM25N-5000-J4 (Cord with Quick Disconnect) 50,000 rpm

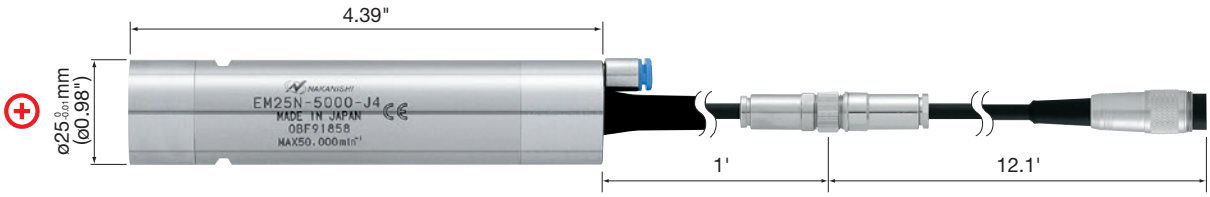

- Motor Speed ····· 1,000~50,000 rpm
- Max. Output Power ····· 200W
- Housing ····· Stainless steel (SUS416)
- Cord ····· Length 13 ft
- Air Coolant Hose ····· Length 13 ft
- Weight ····· 8.82 oz. (w/o Cord)

Brushless Motor

Product Code	Product Name	Outside Diameter	Standard Equipment · Accessories	
AS88322P	EM25N-5000-J4	ø0.98" (ø25 mm)	• Cord with Quick Disconnect • Air Coolant Hose • Reducer • Wrench (22 x 27) : 1 pc.	

*There is not an outside diameter ø1.0"(ø25.4 mm) dimension.

Torque Characteristics of EM25N-5000-J4

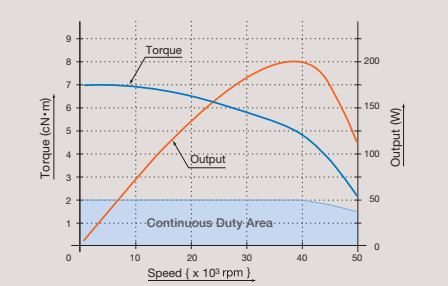

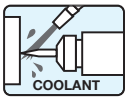

E2000 Series can be used in conjunction with water or oil based coolants.

*Do not exceed the allowable motor speed for the spindle.

Product Code AS81820P SPINDLE NR-H2551 (Ceramic Bearing) 50,000 rpm

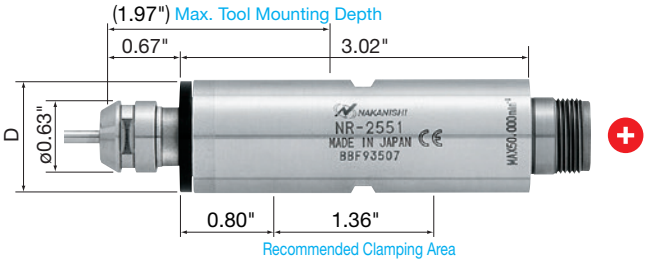

- Allowable Motor Speed ····· 50,000 rpm
- Spindle Accuracy ····· Within 1 µm
- Standard Size Collet (CHK-3.175) ····· ø1/8"
- Weight ····· 8.92 oz.

< Optional >

- Collet (CHK-[][]) ····· ø0.5 mm~ø6.35 mm
  (See Page 6-p3 for details)
- Collet Nut (K-265) ····· For Collet (CHK)
- Metal Saw Arbor (KCH-03) ····· For ø0.24" (I.D.) x ø1.18" (O.D.)
- Grindstone Arbor (AGM-03) ····· For grinding wheel with I.D. of ø5 mm

●Designed for increased durability by utilizing ceramic bearings, for obtaining strong rigidity in both radial direction and thrust directions by utilizing 2 super-precision ceramic bearings on the front side and 2 on the rear side. This spindle can be used for small-diameter milling, drilling, slitting, chamfering, grinding, etc.

Spindle D = ø1.0"(ø25.4 mm), ø0.98"(ø25 mm)

Product Code	Product Name	Outside Diameter	Standard Equipment · Accessories	
AS81820P	NR-H2551	ø1.0" (ø25.4 mm)	• Collet ø1/8" (CHK-3.175) : 1 pc. • Collet Nut (K-265) : 1 pc. • Wrench (12 x 14) : 2 pcs., (22 x 27) : 1 pc.	
AS81819P	NR-2551	ø0.98" (ø25 mm)		

Product Code AS81835P LEVER TYPE SPINDLE NRR-2651 50,000 rpm

No wrenches are required for tool changing.

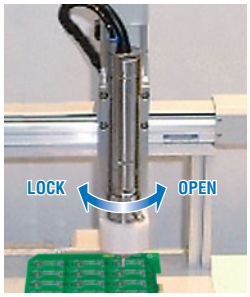

NRR-2651 Installed Example

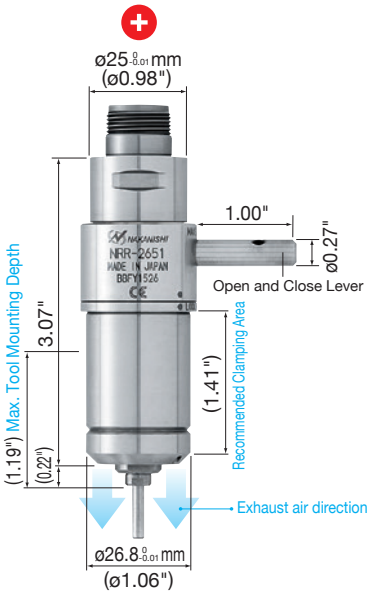

- Allowable Motor Speed ····· 50,000 rpm
- Spindle Accuracy ····· Within 1 µm
- Standard Size Collet (CHB-3.175) ····· ø1/8"
- Weight ····· 11.64 oz.

< Optional >

- Collet (CHB-[][]) ····· ø2.0, ø3.0 mm, ø1/8", ø4.0 mm
  (See Page 6-p2 for details)

Lever Type Spindle ø0.98"(ø25 mm)

Product Code	Product Name	Outside Diameter	Standard Equipment · Accessories	
AS81835P	NRR-2651	ø0.98" (ø25 mm)	• Collet ø1/8" (CHB-3.175) • Wrench (6.1 x 8), (10 x 10), (22 x 27): 1 pc. each	

*There is not an outside diameter ø1.0"(ø25.4 mm) dimension.

Caution : Use the motor at motor speed less than maximum allowable speed or use a speed reducer. DO NOT exceed the allowable motor speed for the spindle and the reducer.

Product Code AS81826P SPEED REDUCER 1/4 ARG-H2504N

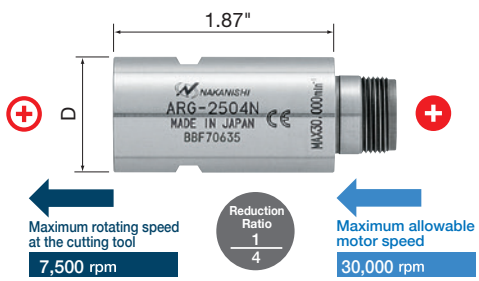

Maximum allowable motor speed 30,000 rpm

Maximum rotating speed at the cutting tool <Reduction Ratio : 1/4> 7,500 rpm

- Speed Reducing Mechanism ····· By planetary gear system
- Weight ····· 5.29 oz.

● If the speed reducer is connected between the motor and the spindle, it reduces the rotating speed and increases the torque while keeping the motor speed unchanged.

Speed Reducer D=ø1.0"(ø25.4 mm), ø0.98"(ø25 mm)

Product Code	Product Name	Outside Diameter	Speed Reduction Ratio	
AS81826P		ø1.0" (ø25.4 mm)	Speed Reduction Ratio 1/4	
AS81822P	ARG-2504N	ø0.98" (ø25 mm)		

Product Code AS81828P SPEED REDUCER 1/16 ARG-H2516N

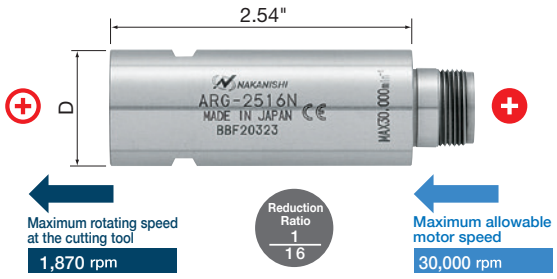

Maximum allowable motor speed 30,000 rpm

Maximum rotating speed at the cutting tool <Reduction Ratio : 1/16> 1,870 rpm

- Speed Reducing Mechanism ····· By planetary gear system
- Weight ····· 7.23 oz.

● If the speed reducer is connected between the motor and the spindle, it reduces the rotating speed and increases the torque while keeping the motor speed unchanged.

Speed Reducer D=ø1.0"(ø25.4 mm), ø0.98"(ø25 mm)

Product Code	Product Name	Outside Diameter	Speed Reduction Ratio	
AS81828P	ARG-H2516N	ø1.0" (ø25.4 mm)	Speed Reduction Ratio 1/16	
AS81824P	ARG-2516N	ø0.98" (ø25 mm)		

25 Pin INTERFACE CABLE



● 3 Meter long Interface Cable provides a DB25 Male Connector at one end and a blunt cut on the opposite end. Includes a pin-out wire diagram for easy interfacing of I/O signals from any NSK Control to a CNC Control.

25 Pin Interface Cable

Product Code	Product Name		
DB25M	DB25M	For NSK Control Connector A	

15 Pin INTERFACE CABLE



● 3 Meter long Interface Cable provides a DB15 Male Connector at one end and a blunt cut on the opposite end. Includes a pin-out wire diagram for easy interfacing of the (OP1) "E-Stop Input Circuit" and "Safety Relay Circuit" from the NSK Control to a CNC Control.

15 Pin Interface Cable

Product Code	Product Name		
DB15M	DB15M	For NSK Control Connector B	

Product Code 4504 AIR LINE KIT AL-C1204

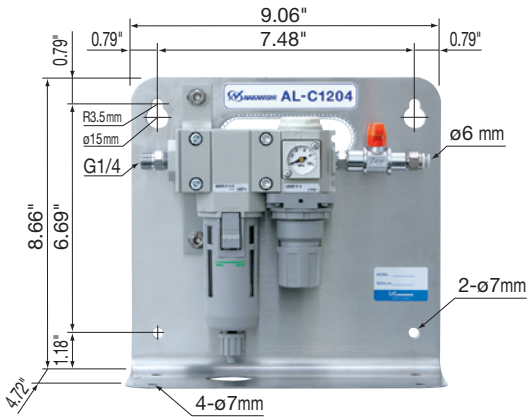

●The AL-C1204 Air Line Kit is designed to deliver clean, dry air to Electric Motors via the Controller. The filter removes small amounts of debris while the adjustable regulator provides the correct air pressure for cooling and purging.

Air Line Kit (For ø6 mm Hose · Filter Mesh 0.3 µm)

Product Code	Product Name	Standard Equipment · Accessories	
4504	AL-C1204	• Air Filter • Air Regulator • Air Pressure Gauge • Air ON-OFF Valve • Hose for Piping (K-275) : 6 ft	

Rotary Coupling

An electric/pneumatic coupling is now available that allows NAKANISHI Electric Spindles up to 30mm diameter, to be mounted to the turret of a CNC turning machine. The rotary coupling prevents power cable and pneumatic lines from getting tangled when the turret is rotated. Contact NSK America at 800-585-4675 for complete details.

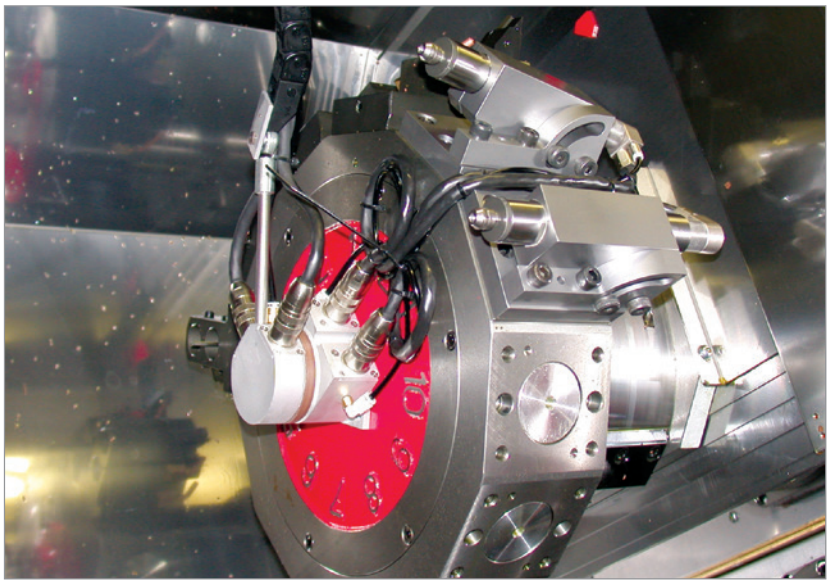

*Order by product code. 2–p25

1
EmaxEVO
ESPERT
ROTUS
IMPULSE
PRESTO II
Sheenus ZERO
2
iSpeed3
E2000 ø1.0"/ø0.98"/ø0.897"
E3000 – One Piece
E3000 – Modular ø1.18"
ø1.0"/ø0.98" ø0.897"
E3000 – 80,000rpm
E4000
3
MA
ø0.897"
ø1.0" ø0.98"
ø1.18"
MS
ø0.75" ø0.79"
ø0.87" ø0.91"
ø1.0" ø0.98"
4
HES
iSpeed5
HTS
HPS
PLANET
Xpeed
ABT
5
AIR LINE KIT
6
PARTS
7
TECHNICAL DATA
8
APPLICATION EXAMPLES
INDEX

E2000 Series ø0.897"(ø22.8 mm) System Chart

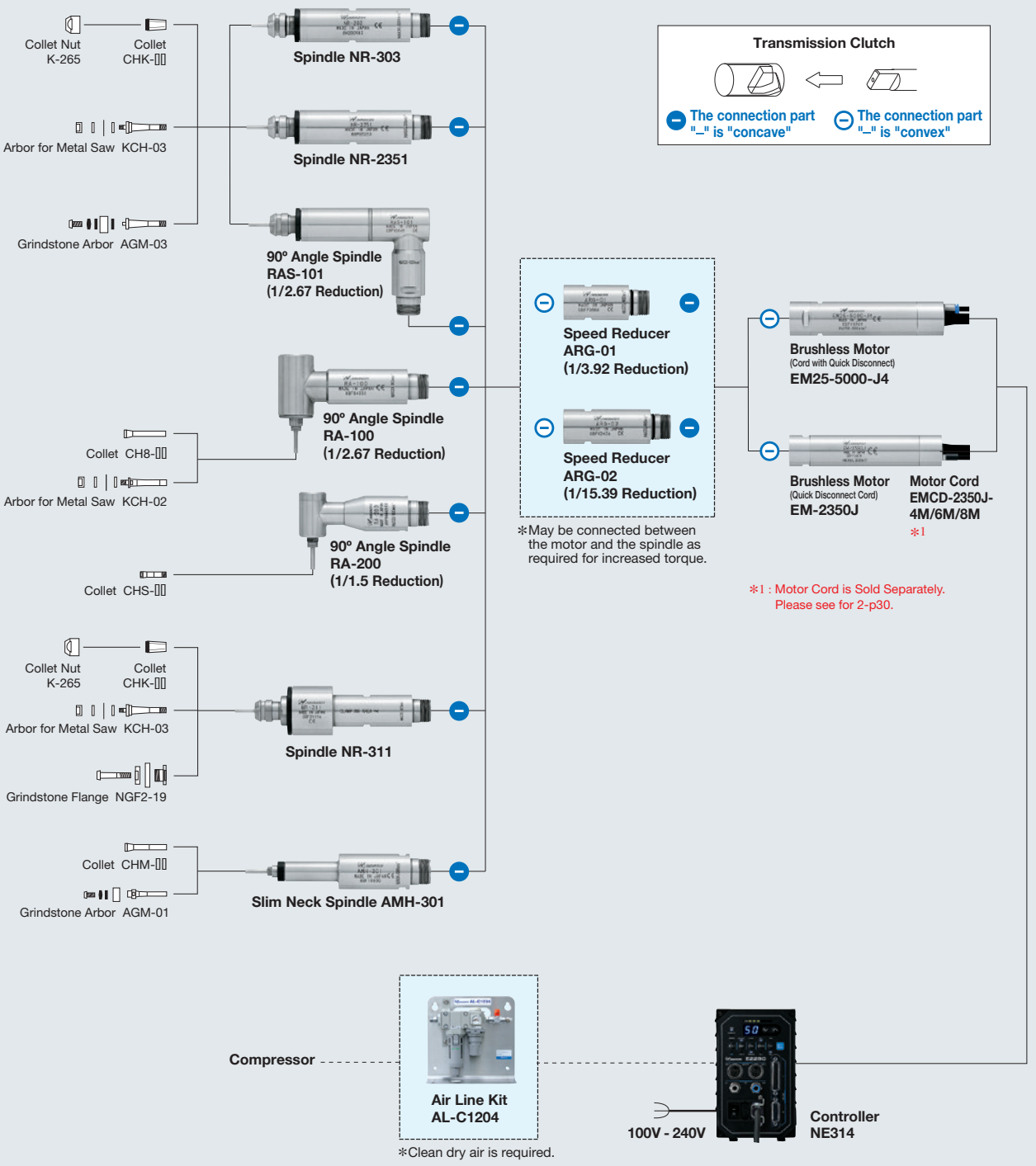

*Do not exceed the maximum motor speed recommendation for the spindles.
Excess speed will dramatically reduce bearing life.

Features of E2000 Series

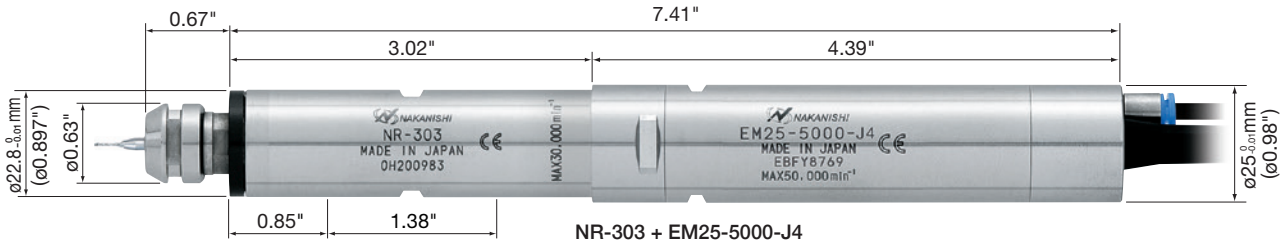

Maximum Output 200W

The E2000 Series motor is a brushless DC motor utilizing hall elements and rare-earth magnets in the rotor. The Motor develops 200W.

Brushless Motor

The brushless DC Motor designs allows for excellent reliability and durability. The brushless DC Motor can be steplessly controlled up to 50,000 rpm.

Air-Cooling System

Air-cooled motor uses a small volume of dry air (1.0 CFM) to minimize heat buildup and allow continuous operation.
Air pressure required is 36-44 PSI.

Wide Variety of Interchangeable Spindles are Available

Straight-type spindles are available along with speed reducers to increase torque as well as 90° degree spindles to provide outstanding system flexibility.

System Protection Function

The E2000 Series is equipped with a protective function to stop the spindle rotation automatically in case of overload ensuring safe and smooth operation. When the protective circuit is activated, an error code is shown on the digital display. In case of an air supply failure, the protective circuit limits the motor/spindle to 30,000 rpm maximum.

Centering Mode Switch

This switch activates the centering mode, which maintains a constant 500 rpm spindle speed for centering the tool.

Operating Parameters

The operating parameters can be preset for : *Fixed Motor Speed *Maximum Motor Speed *Operating without Air and several other functions.

2 Motors can be connected (No Simultaneous Operation)

Up to 2 motors may be connected to 1 controller and operated sequentially making this system very easy to use when multiple live tools are required.

Compact Vertical Controller

The compact, vertical design of the controller makes it extremely easy to mount in cramped control cabinets.

Power Source Auto Detection

The controller is capable of being connected to AC100V or AC240V power sources. The Auto Sensing feature reduces installation time and eliminates the possibility of connecting the incorrect voltage.

Stainless Steel Body

The housings of the motor and spindle are made from precision ground stainless steel (SUS416).

Emergency Stop Function

By setting a parameter, an emergency stop signal can be activated. Using the open detection signal of the motor power line through the safety relay, the E2000 controller can establish a safe operating system.

Automatic Control System Chart

Sequential Operation of up to 2 Motor / Spindles

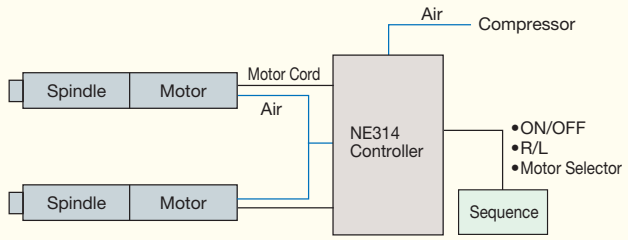

*The E2000 Series controller has the ability to control up to 2 motors sequentially. 2 motors can not be run simultaneously.

High Precision and High-Performance Controller

- **High-Performance Electric Circuit**
  'High grade feedback loop maintains constant spindle speed even if load is varied', and 'Gentle start/Quick stop functions' are provided.
- **Warning/Error Functions**
  Motor/Spindle is stopped when an Error or Warning Code has been detected and indicated on the LED Display. An output signal can be sent to the CNC control.
  Warnings Codes : i.e. • High Air Pressure • Low Air Pressure • Controller Overheat • Motor Overload
  Errors Codes : i.e. • Rotor Lock • Overheat • Overload • Torque Load • External Signal Error • E-Stop • Incompatible Motor
- **Selector Function**
  Max. 2 motors can be controlled sequentially. 2 motors can not be run simultaneously.
- **Motor Speed Display**
  Motor speed is displayed precisely and digitally.
- **LOAD Monitor LED**
  Motor load is displayed by 6 LED's to indicate load level.
- **External Input-Output Signals**
  (Refer to Technical Data 7-p10~p17 in detail)
  Motor/Spindle can be controlled and monitored by external input-output signals. Controls : Start/Stop, Motor Speed Control, FWD./REV. Rotation and etc. Monitor : While Rotating, Rotation Pulse, Controller Power Source Detection, AUTO Mode, Motor Speed Voltage, Torque Load etc.
- **Selection of Illumination Brightness**



Select the brightness of the blue illumination from 4 patterns.

E2000 Series Combination Example — 50,000 rpm







Controller Specifications

Product Name	NE314
Power Source	AC 100 - 240V, 50-60 Hz
	1 Phase
Power Consumption	1.45A
Weight	4 lb. 13.60 oz.
Dimensions	W4.25" x D6.60" x H6.93"

Motor & Spindle

Motor	EM25-5000-J4
Spindle	NR-2351
Speed	1,000~50,000 rpm 500 rpm : for centering
Weight	1 lb. 0.40 oz. (w/o motor cable)
Dimensions	ø0.98" x 7.41"

E2000, NR-2351 Combination Example

Product Code	Product Name	Product	
7720	NE314	Controller	
AS88322	EM25-5000-J4	Brushless Motor	
AS18220	NR-2351	Spindle	
4504	AL-C1204	Air Line Kit	

- 1,000~50,000 rpm
- Maximum Output 200W
- 2 motors can be connected (No Simultaneous Operation).
- External Input / Output Control Signal (Refer to 7-p10~p17 page of this catalog)

Product Code 7720 E2000 CONTROLLER NE314 50,000 rpm

※: Load Monitor

LOAD

: Continuous load area
: Intermittent load area
: Overload

Motor Connector No.1, No.2
Air Output Joint
Air Input Joint
External Input / Output Connector A, B
Fixing Power Cord Hook Bar
Power Cord Hook
Main Power Switch
Main Power Intake with Power Supply Fuses



[1] Rotating LED (RUN)
[2] Warning LED (WARNING)
[3] Error LED (ERROR)
[4] Error Reset Button (RESET)
[5] KEY HOLD LED Button
[6] Digital Speed Indicator
[7] Load Monitor (LOAD)
[8] Motor Speed Adjustment Button (SPEED)
[9] DISPLAY (DISP) Button
[10] Control Button (CTRL)
[11] Motor Spindle Selection Button (MOTOR)
[12] Rotation Direction Button (DIR)
[13] Start / Stop Button (START / STOP)

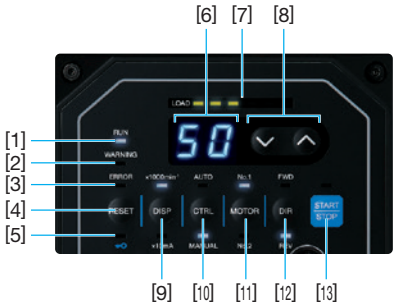

Specifications

Product Name	: NE314
Power Source	: AC 100-240V, 50-60 Hz 1 Phase
Power Consumption	: 1.45A
Weight	: 4 lb. 13.60 oz.
Dimensions	: W4.25" x D6.60" x H6.93"

E2000 Controller

Product Code	Plug Type	Product Name	Standard Equipment · Accessories	
7720	100 - 240V (Without Plug) 	NE314	• Power Cord • ø6mm Air Hose with Filter • Power Cord Hook • Reducer • Connector Cap (Provided) : 2 pcs. • Connector Cover A / B (Provided) • Bracket : 2 pcs. • Air branching joint : 1 pc. • Fuse : 2 pcs. • Mounting Screw : 6 pcs.	

*Please refer to Technical Data 7-p10~p17 in detail about External Input-Output Connector.
*AC100-240V for international operation.

Interface Cable Page 2-p24


● Mounting Bracket

Back Mounting

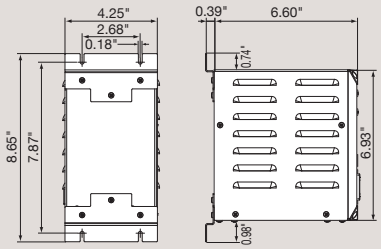

Bottom Mounting

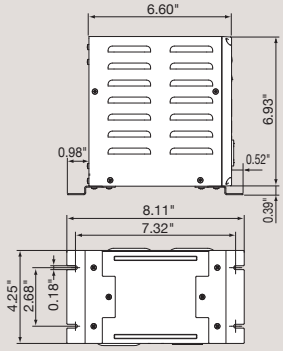



*Order by product code. 2–p29

EM	25	-	5000	-	J4	⊖Clutch
Product Symbol	Outside Diameter		Max. Motor Speed		Cord Variety	

New Model Name for E2000 Series Motor

1
EmaxEVO
ESPERT
ROTUS
IMPULSE
PRESTO II
Sheenus ZERO
2
iSpeed3
E2000 ø1.0"/ø0.98"/ø0.897"
E3000 – One Piece
E3000 – Modular
ø1.18"
ø1.0"/ø0.98" ø0.897"
E3000 – 80,000rpm
E4000
3
MA
ø0.897"
ø1.0" ø0.98"
ø1.18"
MS
ø0.75" ø0.79"
ø0.87" ø0.91"
ø1.0" ø0.98"
4
HES
iSpeed5
HTS
HPS
PLANET
Xpeed
ABT
5
AIR LINE KIT
6
PARTS
7
TECHNICAL DATA
8
APPLICATION EXAMPLES
INDEX

Product Code AS88322 BRUSHLESS MOTOR EM25-5000-J4 (Cord with Quick Disconnect) 50,000 rpm

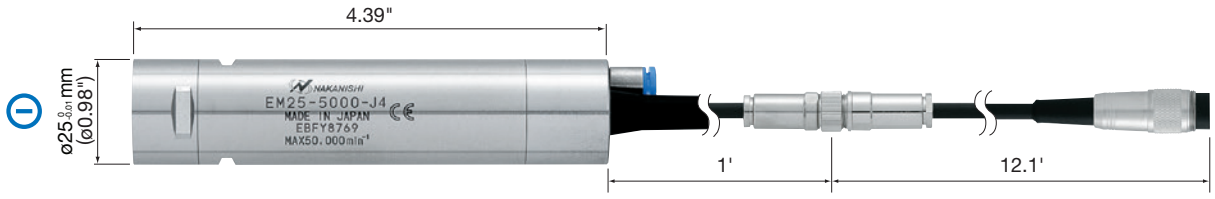

- Motor Speed ····· 1,000~50,000 rpm
- Max. Output Power ····· 200W
- Housing ····· Stainless steel (SUS416)
- Cord ····· Length 13 ft
- Air Coolant Hose ····· Length 13 ft
- Weight ····· 8.82 oz. (w/o Cord)

Brushless Motor

Product Code	Product Name	Outside Diameter	Standard Equipment · Accessories	
AS88322	EM25-5000-J4	ø0.98" (ø25 mm)	• Cord with Quick Disconnect • Air Coolant Hose • Reducer • Wrench (22 x 27) : 1 pc.	

*There is not an outside diameter ø1.0"(ø25.4 mm) dimension.

Product Code 7721 BRUSHLESS MOTOR EM-2350J 50,000 rpm

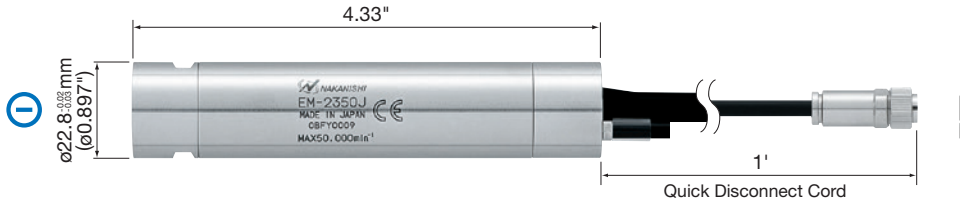

- Motor Speed ····· 1,000~50,000 rpm
- Max. Output Power ····· 200W
- Housing ····· Stainless steel (SUS416)
- Weight ····· 9.17 oz. (w/ Cord)

Brushless Motor

Product Code	Product Name	Standard Equipment · Accessories	
7721	EM-2350J	• Wrench (20 x 24) : 1 pc.	

Note : Motor Cord is sold separately. Please select a cord from the list below.

Motor Cord

Product	Product Code	Description · Product Name	Length	Std. Accessories	Fit to	
	7722	Motor Cord 4M EMCD-2350J-4M	12.1 ft (3.7m)	• Air Hose • Connector Cap (Provided)	EM-2350J	
	7723	Motor Cord 6M EMCD-2350J-6M	18.7 ft (5.7m)			
	7724	Motor Cord 8M EMCD-2350J-8M	25.3 ft (7.7m)			

Torque Characteristics of EM25-5000-J4 / EM-2350J

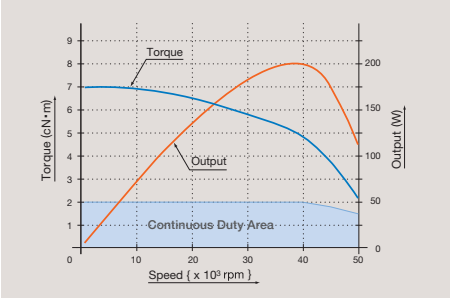

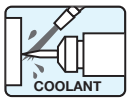

E2000 Series can be used in conjunction with water or oil based coolants.

Product Code AS41830 SPINDLE NR-303 30,000 rpm

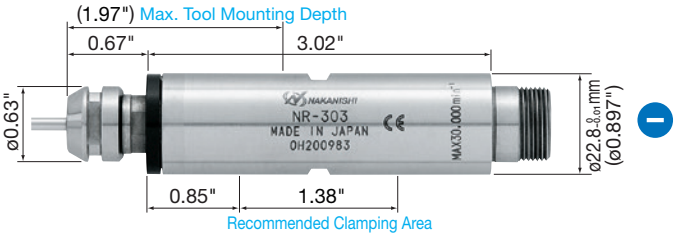

- Allowable Motor Speed ····· 30,000 rpm
- Spindle Accuracy ····· Within 2 µm
- Standard Size Collet (CHK-3.175) ····· ø1/8"
- Weight ····· 7.58 oz.

< Optional >

- Collet (CHK-[]) ····· ø0.5 mm~ø6.35 mm (See Page 6-p3 for details)
- Collet Nut (K-265) ····· For Collet (CHK)
- Metal Saw Arbor (KCH-03) ····· For ø0.24" (I.D.) x ø1.18" (O.D.)
- Grindstone Arbor (AGM-03) ···· For grinding wheel with I.D. of ø5 mm

*Do not exceed the allowable motor speed for the spindle.

●This spindle is ideal for small diameter drilling, milling and grinding. A wide selection of collets and accessories is available.

Spindle

Product Code	Product Name	Standard Equipment · Accessories	
AS41830	NR-303	• Collet ø1/8" (CHK-3.175) : 1 pc. • Collet Nut (K-265) : 1 pc. • Wrench (12 x 14) : 2 pcs., (20 x 24) : 1 pc.	

Product Code AS18220 SPINDLE NR-2351 (Ceramic Bearings) 50,000 rpm

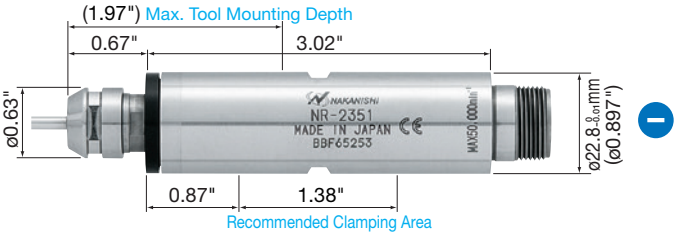

- Allowable Motor Speed ····· 50,000 rpm
- Spindle Accuracy ····· Within 1 µm
- Standard Size Collet (CHK-3.175) ····· ø1/8"
- Weight ····· 7.58 oz.

< Optional >

- Collet (CHK-[]) ····· ø0.5 mm~ø6.35 mm (See Page 6-p3 for details)
- Collet Nut (K-265) ····· For Collet (CHK)
- Metal Saw Arbor (KCH-03) ····· For ø0.24" (I.D.) x ø1.18" (O.D.)
- Grindstone Arbor (AGM-03) ···· For grinding wheel with I.D. of ø5 mm

●This spindle is ideal for ultra-precision, small diameter drilling, milling and grinding. A wide selection of collets and accessories is available.

Spindle

Product Code	Product Name	Standard Equipment · Accessories	
AS18220	NR-2351	• Collet ø1/8" (CHK-3.175) : 1 pc. • Collet Nut (K-265) : 1 pc. • Wrench (12 x 14) : 2 pcs., (20 x 24) : 1 pc.	

COOLANT

Caution : Use the motor at motor speed less than maximum allowable speed or use the speed reducer. DO NOT exceed the allowable motor speed for the spindle and the reducer.

Product Code AS51094 — 90° ANGLE SPINDLE RAS-101

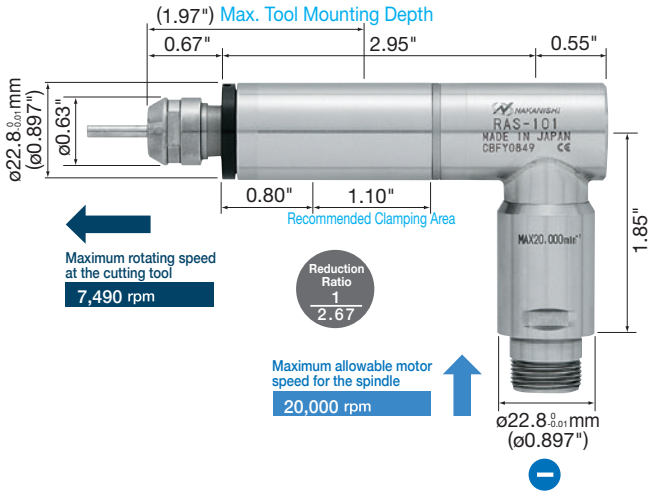

●90°Angle type spindle with wide chucking range up to ø1/4"(ø6.35 mm) is suitable for installations where space restrictions exist.

Maximum allowable motor speed for the spindle 20,000 rpm

Maximum rotating speed at the cutting tool <Reduction Ratio : 1/2.67> 7,490 rpm

- Spindle Accuracy ····· Within 2 µm
- Standard Size Collet (CHK-3.175) ····· ø1/8"
- Weight ····· 11.46 oz.

< Optional >

- Collet (CHK-□□) ····· ø0.5 mm~ø6.35 mm (See Page 6-p3 for details)
- Collet Nut (K-265) ····· For Collet (CHK)
- Metal Saw Arbor (KCH-03)····· For ø0.24" (I.D.) x ø1.18" (O.D.)
- Grindstone Arbor (AGM-03) ····· For grinding wheel I.D. of ø5 mm

90° Angle Spindle

Product Code	Product Name	Standard Equipment · Accessories	
AS51094	RAS-101	• Collet ø1/8" (CHK-3.175) : 1 pc. • Collet Nut (K-265) : 1 pc. • Wrench (12 x 14) : 2 pcs., (20 x 24) : 1 pc.	

Product Code AS11411 — 90° ANGLE SPINDLE RA-100

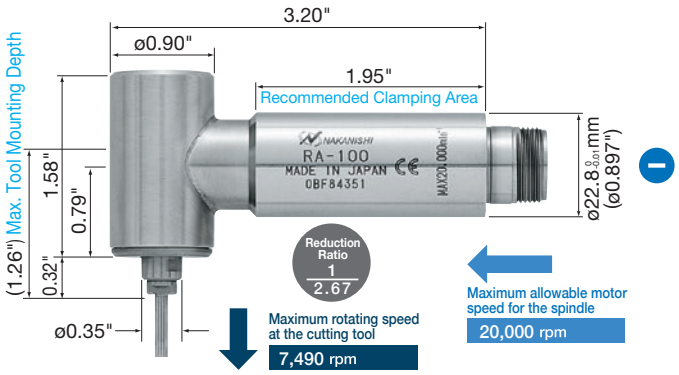

●This spindle is capable of working on corners difficult to work with straight type, drilling on side face and, slitting of aluminum, brass, etc. with the use of ø1.18"(ø30 mm) Metal Saw.

Maximum allowable motor speed for the spindle 20,000 rpm

Maximum rotating speed at the cutting tool <Reduction Ratio : 1/2.67> 7,490 rpm

- Standard Size Collet (CH8-3.175) ····· ø1/8"
- Weight ····· 9.56 oz.

< Optional >

- Collet (CH8-□□) ····· ø0.8 mm~ø3.175 mm (See Page 6-p5 for details)
- Metal Saw Arbor (KCH-02) ····· For ø0.24" (I.D.) x ø1.18" (O.D.)

90° Angle Spindle

Product Code	Product Name	Standard Equipment · Accessories	
AS11411	RA-100	• Collet ø1/8" (CH8-3.175) : 1 pc. • Wrench (7 x 5.5), (8 x 5), (20 x 24) : 1 pc. each.	

Product Code AS11412 — 90° ANGLE SPINDLE RA-200

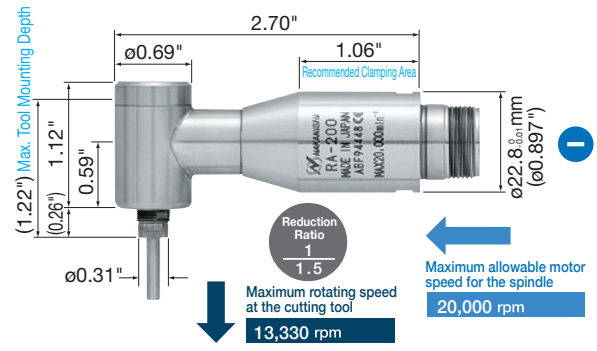

●This spindle can be used for working on corners difficult to work or unfit for working with straight type, drilling on side face, etc.

Maximum allowable motor speed for the spindle 20,000 rpm

Maximum rotating speed at the cutting tool <Reduction Ratio : 1/1.5> 13,330 rpm

- Standard Size Collet (CHS-3.175) ····· ø1/8"
- Weight ····· 5.82 oz.

< Optional >

- Collet (CHS-□□) ····· ø0.8 mm~ø3.175 mm (See Page 6-p4 for details)

90° Angle Spindle

Product Code	Product Name	Standard Equipment · Accessories	
AS11412	RA-200	• Collet ø1/8" (CHS-3.175) : 1 pc. • Wrench (7 x 5.1), (8 x 5), (20 x 24) : 1 pc. each.	

COOLANT

Product Code AS42511 SPINDLE NR-311 30,000 rpm

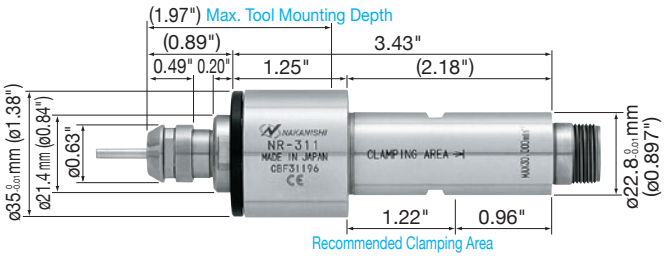

- Allowable Motor Speed ····· 30,000 rpm
- Spindle Accuracy ····· Within 2 µm
- Standard Size Collet (CHK-3.175) ····· ø1/8"
- Weight ····· 13.05 oz.

< Optional >

- Collet (CHK-[]) ····· ø0.5 mm~ø6.35 mm
  (See Page 6-p3 for details)
- Collet Nut (K-265) ····· For Collet (CHK)
- Metal Saw Arbor (KCH-03) ····· For ø0.24" (I.D.) x ø1.18" (O.D.)
- Grindstone Flange (NGF2-19) ··· ø19.05 (I.D.) x ø40 (O.D.) x 7 (W) mm

●Large precision angular ball bearings are assembled on the front part of the spindle to provide rigidity on both the radial and the thrust sides. This spindle is suitable for grinding of deep hole, grinding by ø1.57" (40 mm) grindstone and small-diameter end milling.

Spindle

Product Code	Product Name	Standard Equipment · Accessories	
AS42511	NR-311	• Collet ø1/8" (CHK-3.175) : 1 pc. • Collet Nut (K-265) : 1 pc. • Wrench (12 x 14), (20 x 24) : 1 pc. each	

Product Code AS11510 SPINDLE AMH-301 30,000 rpm

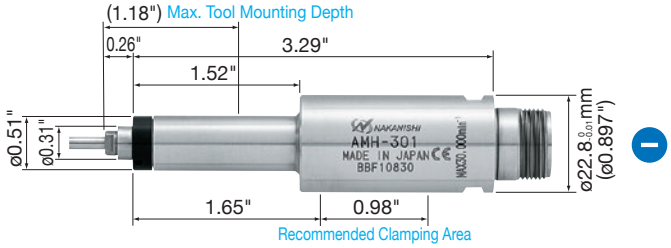

- Allowable Motor Speed ····· 30,000 rpm
- Standard Size Collet (CHM-3.175) ····· ø1/8"
- Weight ····· 6.03 oz.

< Optional >

- Collet (CHM-[]) ····· ø1.0 mm~ø3.175 mm
  (See Page 6-p4 for details)
- Grindstone Arbor (AGM-01) ····· For grinding wheel with I.D. of ø5 mm

●Suitable for the grinding of the inner surface of slender and deep holes. (Example) If a ø0.55" grindstone is mounted on the grinding arbor AGM-01, this spindle is suitable for the inner grinding of ø0.59" or more and with the depth of 1.57" or less.

Spindle

Product Code	Product Name	Standard Equipment · Accessories	
AS11510	AMH-301	• Collet ø1/8" (CHM-3.175) : 1 pc. • Wrench (7 x 5.1), (6 x 4.5), (20 x 24) : 1 pc. each	

*Do not exceed the allowable motor speed for the spindle.

Caution : Use the motor at motor speed less than maximum allowable speed or use the speed reducer. DO NOT exceed the allowable motor speed for the spindle and the reducer.

Product Code AS11414 SPEED REDUCER 1/3.92 ARG-01

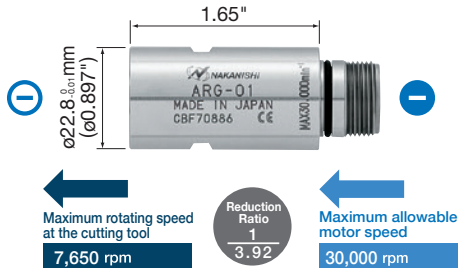

Maximum allowable motor speed 30,000 rpm

Maximum rotating speed at the cutting tool <Reduction Ratio : 1/3.92> 7,650 rpm

- Speed Reducing Mechanism ····· By planetary gear system
- Weight ····· 3.81 oz.

● If the speed reducer is connected between the motor and the spindle, it reduces the rotating speed and increases the torque while keeping the motor speed unchanged.

Speed Reducer 1/3.92

Product Code	Product Name	Speed Reduction Ratio	
AS11414	ARG-01	Speed Reduction Ratio 1/3.92	

Product Code AS11428 SPEED REDUCER 1/15.39 ARG-02

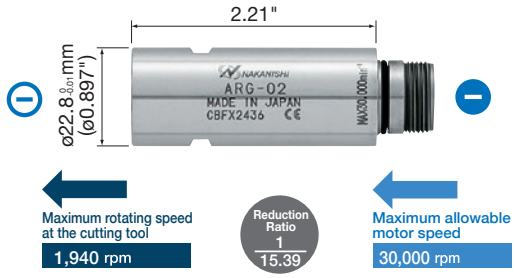

Maximum allowable motor speed 30,000 rpm

Maximum rotating speed at the cutting tool <Reduction Ratio : 1/15.39> 1,940 rpm

- Speed Reducing Mechanism ····· By planetary gear system
- Weight ····· 5.22 oz.

● If the speed reducer is connected between the motor and the spindle, it reduces the rotating speed and increases the torque while keeping the motor speed unchanged.

Speed Reducer 1/15.39

Product Code	Product Name	Speed Reduction Ratio	
AS11428	ARG-02	Speed Reduction Ratio 1/15.39	

25 Pin INTERFACE CABLE



● 3 Meter long Interface Cable provides a DB25 Male Connector at one end and a blunt cut on the opposite end. Includes a pin-out wire diagram for easy interfacing of I/O signals from any NSK Control to a CNC Control.

25 Pin Interface Cable

Product Code	Product Name		
DB25M	DB25M	For NSK Control Connector A	

15 Pin INTERFACE CABLE



● 3 Meter long Interface Cable provides a DB15 Male Connector at one end and a blunt cut on the opposite end. Includes a pin-out wire diagram for easy interfacing of the (OP1) "E-Stop Input Circuit" and "Safety Relay Circuit" from the NSK Control to a CNC Control.

15 Pin Interface Cable

Product Code	Product Name		
DB15M	DB15M	For NSK Control Connector B	

Product Code 4504 AIR LINE KIT AL-C1204

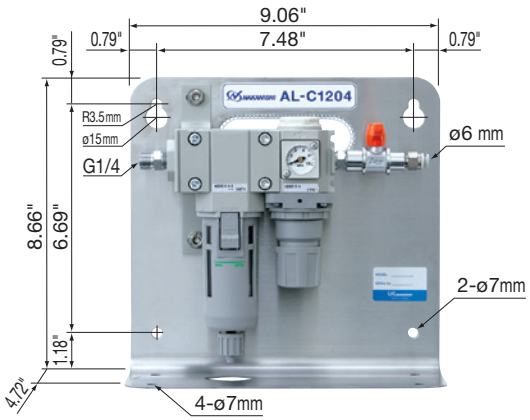

●The AL-C1204 Air Line Kit is designed to deliver clean, dry air to Electric Motors via the Controller. The filter removes small amounts of debris while the adjustable regulator provides the correct air pressure for cooling and purging.

Air Line Kit (For ø6 mm Hose · Filter Mesh 0.3 µm)

Product Code	Product Name	Standard Equipment · Accessories	
4504	AL-C1204	• Air Filter • Air Regulator • Air Pressure Gauge • Air ON-OFF Valve • Hose for Piping (K-275) : 6 ft	

Rotary Coupling

An electric/pneumatic coupling is now available that allows NAKANISHI Electric Spindles up to 30mm diameter, to be mounted to the turret of a CNC turning machine. The rotary coupling prevents power cable and pneumatic lines from getting tangled when the turret is rotated. Contact NSK America at 800-585-4675 for complete details.

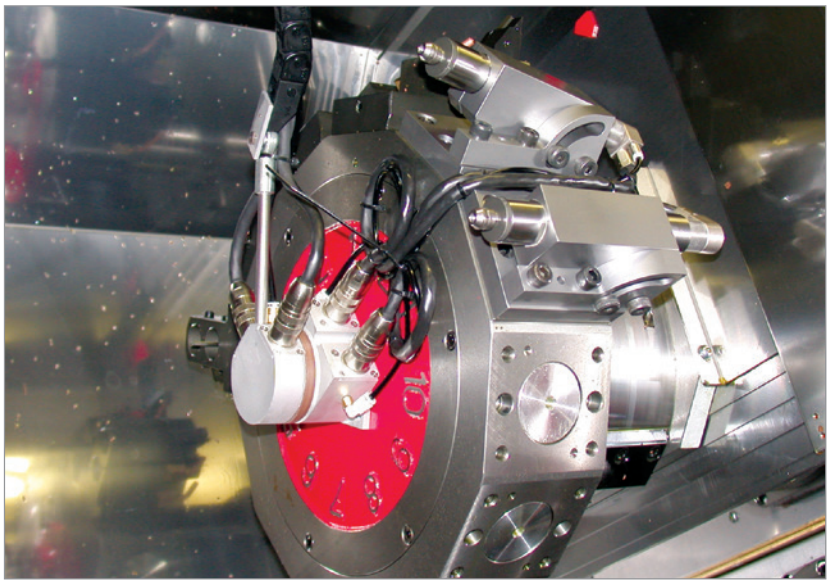

*Order by product code. 2–p35

1
EmaxEVO
ESPERT
ROTUS
IMPULSE
PRESTO II
Sheenus ZERO
2
iSpeed3
E2000 ø1.0"/ø0.98"/ø0.897"
E3000 – One Piece
E3000 – Modular
ø1.18"
ø1.0"/ø0.98" ø0.897"
E3000 – 80,000rpm
E4000
3
MA
ø0.897"
ø1.0" ø0.98"
ø1.18"
MS
ø0.75" ø0.79"
ø0.87" ø0.91"
ø1.0" ø0.98"
4
HES
iSpeed5
HTS
HPS
PLANET
Xpeed
ABT
5
AIR LINE KIT
6
PARTS
7
TECHNICAL DATA
8
APPLICATION EXAMPLES
INDEX

TO INFINITY AND BEYOND



E-Speed

The Possibilities Are Endless with the Versatile E-Speed

1,000~60,000 rpm

One Piece Type

Outside Diameter **ø1.18", ø0.98", ø0.79"** (ø30, 25, 20 mm)

Modular Type

Outside Diameter **ø1.18", ø1.0", ø0.98", ø0.897"** (ø30, 25.4, 25, 22.8 mm)



1,000~80,000 rpm

Modular Type

Outside Diameter **ø1.97", ø1.18"** (ø50, 30 mm)

1
EmaxEVO
ESPERT
ROTUS
IMPULSE
PRESTO II
Sheenus ZERO
2
iSpeed3
E2000 ø1.0"/ø0.98"/ø0.897"
E3000 – One Piece
E3000 – Modular ø1.18"
ø1.0"/ø0.98" ø0.897"
E3000 – 80,000rpm
E4000
3
MA
ø0.897"
ø1.0" ø0.98"
ø1.18"
MS
ø0.75" ø0.79"
ø0.87" ø0.91"
ø1.0" ø0.98"
4
HES
iSpeed5
HTS
HPS
PLANET
Xpeed
ABT
5
AIR LINE KIT
6
PARTS
7
TECHNICAL DATA
8
APPLICATION EXAMPLES
INDEX

One Piece Type

Straight Motor Spindles

Max. Speed (rpm)	O.D.	Product Name	Collet		Features	Page
60,000	ø1.18" (ø30mm)	EMS-3060K	CHK			2-p44
		EMS-3060A	CHA		for light duty Grinding	2-p44
8,000		EMR-3008K	CHK			2-p45
60,000		EM30-S6000	CHK			2-p48
	ø0.98" (ø25mm)	EM25-S6000	CHA			2-p48
	ø0.79" (ø20mm)	EM20-S6000	CHA			2-p49

Straight Motor Spindles (Flange Type)

60,000	Flange Type	EMSF-3060K	CHK			2-p46

90˚Angle Motor Spindle

21,300	ø1.18" (ø30mm)	EMA-3020K	CHK		Collet Size : Max. ø6.35mm	2-p50
		EMA-3020S	CHSS		Collet Size : Max. ø3.175mm	2-p50

Modular Type

Straight Spindles

Max. Speed (rpm)	O.D.	Product Name	Collet		Page
80,000	ø1.18" (ø30mm)	NR-3080S	CHA		2-p75
60,000		NR-3060S	CHK		2-p58
50,000		NR-453E	CHK		2-p58
40,000		NR-403E	CHK		2-p59
50,000	ø1.0" (ø25.4mm)	NR-H2551	CHK		2-p23
	ø0.98" (ø25mm)	NR-2551	CHK		2-p23
30,000	ø0.897" (ø22.8mm)	NR-2351	CHK		2-p31
		NR-303	CHK		2-p31

Motors

Max. Speed (rpm)		Page
80,000 EM-3080J		2-p74
60,000 EM-3060		2-p54
60,000 EM-3060J		2-p55
50,000 EM25N-5000-J4		2-p22
50,000 EM25-5000-J4		2-p30
50,000 EM-2350J		2-p30

Modular Type

90˚Angle Spindles

Max. Speed (rpm)	O.D.	Product Name	Collet		Page
7,490	ø1.18" (ø30mm)	RAS-151E	CHK		2-p60
20,000		RAX-271E	CHK		2-p60
5,000		RAX-71E	CHK		2-p60
7,490		RA-151E	CH8		2-p61
13,330		RA-271E	CHS		2-p61
7,490	ø0.897" (ø22.8mm)	RAS-101	CHK		2-p32
		RA-100	CH8		2-p32
13,330		RA-200	CHS		2-p32

Motors

Max. Speed (rpm)		Page
32,000 EM-3030J		2-p56
30,000 EM-3030T-J		2-p57
50,000 EM25-5000-J4		2-p30
50,000 EM-2350J		2-p30

ATC Spindles

Max. Speed (rpm)	O.D.	Product Name	Collet		Page
50,000	ø1.97" (ø50mm)	NR50-5100 ATC	CHR		2-p62
		NR50-5100 ATC-RS	CHR-RS		2-p62
	ø1.57" (ø40mm)	NR40-5100 ATC	CHB		2-p62

60,000 EM-3060		2-p54
60,000 EM-3060J		2-p55

Spindle for deep hole grinding

Max. Speed (rpm)	O.D.	Product Name	Collet		Page
30,000	ø0.897" (ø22.8mm)	NR-311	CHK		2-p33
		AMH-301	CHM		2-p33

50,000 EM25-5000-J4		2-p30
50,000 EM-2350J		2-p30

Lever Type Spindle

Max. Speed (rpm)	O.D.	Product Name	Collet		Page
60,000	ø1.06" (ø26.8mm)	NRR-3060	CHB		2-p63

60,000 EM-3060		2-p54
60,000 EM-3060J		2-p55

Max. Speed (rpm)	O.D.	Product Name	Collet		Page
50,000	ø1.06" (ø26.8mm)	NRR-2651	CHB		2-p23

50,000 EM25N-5000-J4		2-p22

Quick Change Spindle

Max. Speed (rpm)	O.D.	Product Name	Collet		Page
60,000	Flange Type	NR3060-AQC	CHK CHA		2-p64
	ø1.18" (ø30mm)	NRR3060-QC	CHK CHA		2-p65

60,000 EM-3060		2-p54
60,000 EM-3060J		2-p55

Air Bearing Spindle (Flange Type)

Max. Speed (rpm)	O.D.	Product Name	Collet		Page
80,000	Flange Type	NRAF-5080	CHK	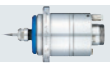	2-p75

80,000 EM-3080J		2-p74

1
EmaxEVO
ESPERT
ROTUS
IMPULSE
PRESTO II
Sheenus ZERO
2
iSpeed3
E2000 ø1.0"/ø0.98"/ø0.897"
E3000 – One Piece
E3000 – Modular
ø1.18"
ø1.0"/ø0.98" ø0.897"
E3000 – 80,000rpm
E4000
3
MA
ø0.897"
ø1.0" ø0.98"
ø1.18"
MS
ø0.75" ø0.79"
ø0.87" ø0.91"
ø1.0" ø0.98"
4
HES
iSpeed5
HTS
HPS
PLANET
Xpeed
ABT
5
AIR LINE KIT
6
PARTS
7
TECHNICAL DATA
8
APPLICATION EXAMPLES
INDEX

One Piece Type - System Chart

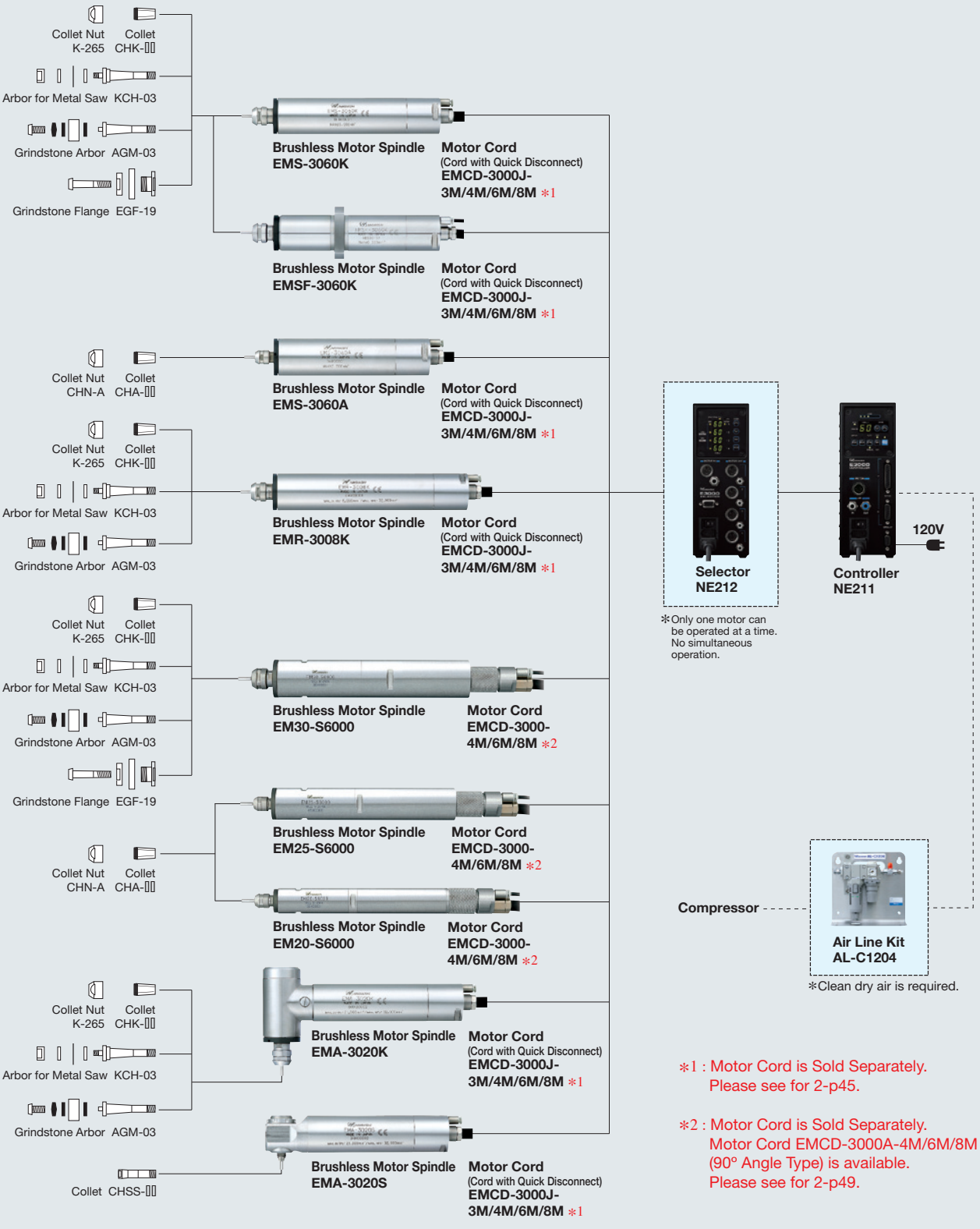

∗1 : Motor Cord is Sold Separately.
Please see for 2-p45.

∗2 : Motor Cord is Sold Separately.
Motor Cord EMCD-3000A-4M/6M/8M (90° Angle Type) is available.
Please see for 2-p49.

Features of E3000 Series

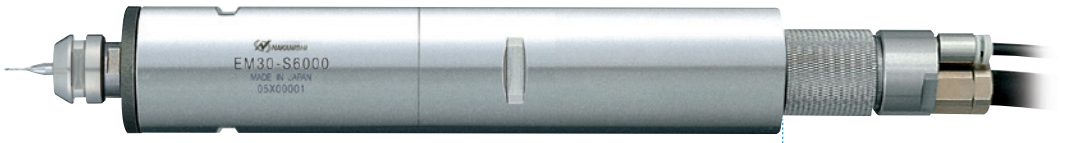

EM30-S6000

Motor Cord Sold Separately

Maximum Motor Speed 60,000 rpm

The maximum motor speed 60,000 rpm is realized by using high performance brushless motor and ceramic bearings.

Maximum Motor Output with 350W Power Supply

350W for ø1.18"(ø30 mm) spindle.
250W for ø0.98"(ø25 mm) and ø0.79"(ø20 mm) spindle.

Motor Spindle Diameter

A ø0.79"(ø20 mm), ø0.98"(ø25 mm), ø1.18"(ø30 mm) motor spindle diameter are available.

Air-Cooling System

Air-cooled motor uses a small volume of air (1.0 CFM) to minimize heat buildup and allow continuous operation.
Air pressure required is 36-44 PSI.

Spindle Accuracy

Spindle Accuracy is within 1 µm (TIR).

High Rigidity, Short Body

E3000 series uses a short body that is hardened and precision ground for excellent durability.

Motor Connector Attaches Directly to the Back of the Motor / Spindle.

Simple screw-lock connector makes changing motors extremely easy. Electric and Air feed incorporated into a single connector.

Power Source Auto Detection

Power Source is 100-240V for international operation. Eliminate the need of setting the voltage or changing fuses.

Protection System, External Input / Output Control Signal

Error function : Motor/Spindle is stopped safety, Error LED is lit.
ex.) Overload operation, Air shortage, Motor Spindle can be controlled and monitored by external input-output connector.
ex.) Control ; Start/Stop, FWD./REV., Motor Speed Control
Monitor ; Motor rotating, Torque Load.

Use E2280 Motor & Spindle with E3000 Controller

E2280 motor & spindle can be used with E3000 controller.
{Less than 50,000 rpm}

ø0.897"(ø22.8 mm) Spindle Usage

Use ø0.897"(ø22.8 mm) spindles from our general catalog and an EM25-5000-J4 and EM-2350J motors {ø0.98"(ø25 mm) 200W} with NE211.

Centering Mode Switch

This switch activates the centering mode, which maintains a constant 500 rpm spindle speed for centering the tool.

Automatic Control System Chart

Single Motor Spindle Operation

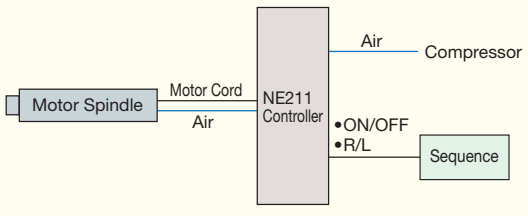

Sequential Operation of up to 4 Motor / Spindles

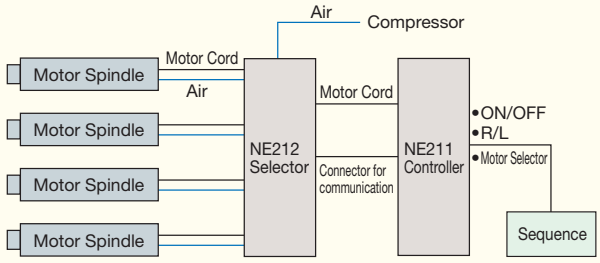

*When connecting NE211 to NE212, up to 4 motors can be connected to NE212 providing individual control of each motor.
(4 motors can not be run simultaneously.)

- AC100-240V for international operation
- 1,000~60,000 rpm ● Maximum Output 350W
- External Input / Output Control Signal (Refer to 7-p2~p9 page of this catalog)

Product Code 9775 CONTROLLER NE211 60,000 rpm

＊: Load Meter



● : Continuous load area
● : Intermittent load area
● : Overload

[1] Load Meter＊
[2] Running LED (RUN)
[3] Warning LED (WARNING)
[4] Error LED (ERROR)
[5] Error Reset Switch (RESET)
[6] Gear Setting Switch (GEAR)
[7] Control Switch (AUTO/MANUAL)
[8] Rotating Direction Selector Switch (FWD./REV.)
[9] Start Switch (START)
[10] Motor Speed Adjustment Switch (SPEED)
[11] Display

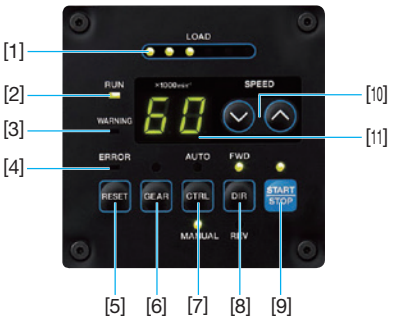

Specifications

Product Name	: NE211
Power Source	: AC120V
Motor Speed	: 1,000-60,000 rpm
Max. Output Power	: 350W (For ø1.18")
Power Consumption	: 1.8A
Air Flow Volume	: 1.0CFM (36-44PSI)
Weight	: 6 lb. 2.77 oz.
Dimensions	: W3.46" x D5.43" x H9.37"

E3000 Controller

Product Code	Plug Type	Product Name	Standard Equipment · Accessories	
9775	120V (B type)	NE211	• Power Cord : 6 ft • Air Hose with filter • Reducer • Connector Cap (Provided) • Bracket • Nylon Clip • Screw • Rubber Pad • Fuse (T6.3AL) 250V: 2 pcs.	

*Please refer to Technical Data 7-p2~p9 in detail about External Input-Output Connector.
*AC100-240V for international operation. Please check the power source plug type (2-p43) and order accordingly.

● Mounting Bracket

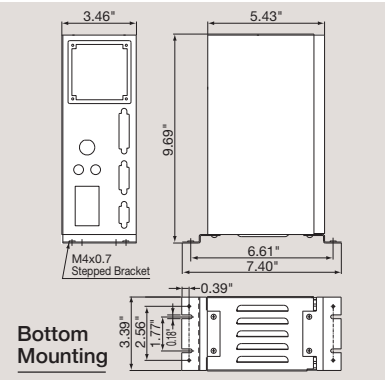

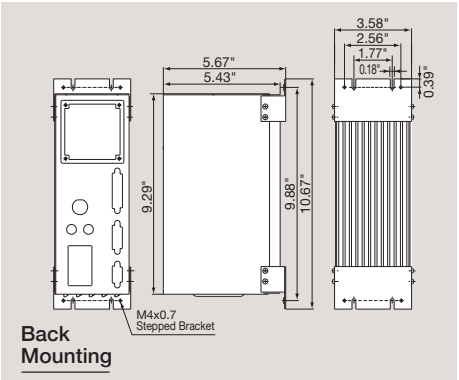

Optional



Control Panel Extension Cord

Product Code	Product Name	Fit to	
8407	E3000-PEX4	NE211	

25 / 15 Pin Interface Cable

Product Code	Product Name	Fit to	
DB25M	DB25M	NE211	
DB15M	DB15M	NE211	

- AC100-240V for international operation
- Up to 4 motors can be connected to NE212 providing individual control of each motor. (Simultaneous motor operation is not possible)

Product Code 9781 SELECTOR NE212 60,000 rpm

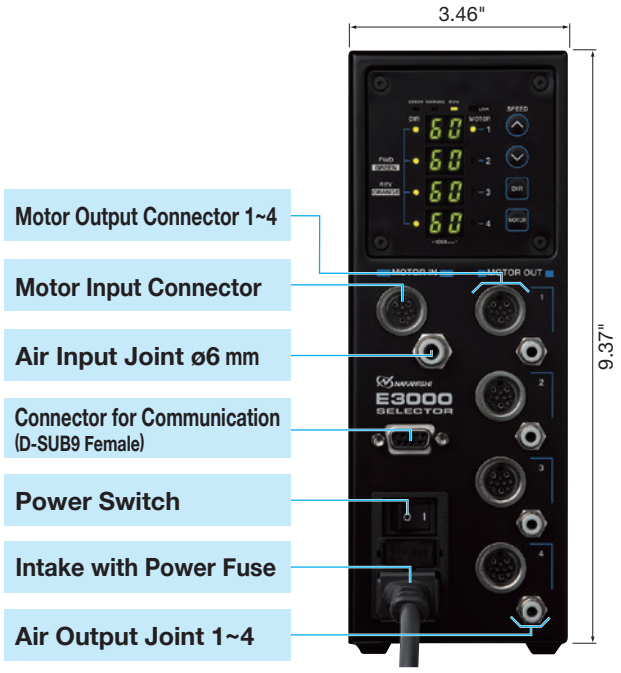

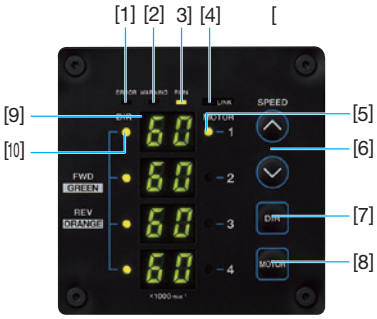

[1] Error LED (ERROR)
[2] Warning LED (WARNING)
[3] Running LED (RUN)
[4] Link LED (LINK)
[5] Motor Select LED
[6] Motor Speed Adjustment Switch (SPEED)
[7] Rotating Direction Selector Switch (FWD./REV.)
[8] Motor Selector Switch (MOTOR SEL)
[9] Display
[10] FWD./REV. LED (FWD. / REV.)

Specifications

Product Name: NE212
Power Source : AC120V
Power Consumption : 0.15A
Air Flow Volume : Max. 4.0CFM
(51PSI / Using max. 4 motor/spindles)
Weight : 4 lb. 3.02 oz.
Dimensions : W3.46" x D5.43" x H9.37"

● Mounting Bracket

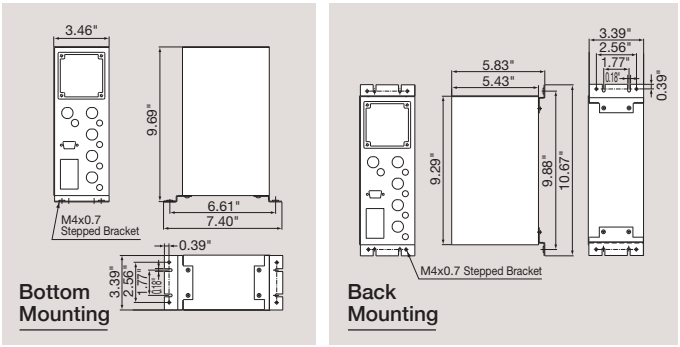

E3000 Selector

Product Code	Plug Type	Product Name	Standard Equipment · Accessories	
9781	120V (B type)	NE212	• Power Cord : 6 ft • Connect NE211 to NE212 Cable : 23.62" • Communication Cable : 23.62" • Connector Cap (Provided) • Plug to avoid Air Flow • Bracket • Nylon Clip • Screw • Rubber Pad • Fuse (T1.6AL) 250V: 2 pcs.	

*Power Source for Global Operation (AC100-240V). Please check the power source plug type and order accordingly.

● Power Source Plug

Plug Type	Main Usable Area	Product
For 120V (B type)	For U.S.A. and Canada	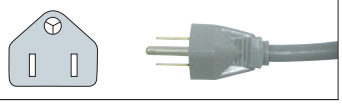

1 EmaxEVO ESPERT ROTUS IMPULSE PRESTO II Sheenus ZERO
2 iSpeed3 E2000 ø1.0"/ø0.98"/ø0.897" E3000 – One Piece E3000 – Modular ø1.18" ø1.0"/ø0.98" ø0.897" E3000 – 80,000rpm E4000
3 MA ø0.897" ø1.0" ø0.98" ø1.18" MS ø0.75" ø0.79" ø0.87" ø0.91" ø1.0" ø0.98"
4 HES iSpeed5 HTS HPS PLANET Xpeed ABT
5 AIR LINE KIT
6 PARTS
7 TECHNICAL DATA
8 APPLICATION EXAMPLES
INDEX

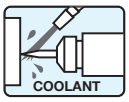

E3000 Series can be used in conjunction with water or oil based coolants.

Product Code 7593 BRUSHLESS MOTOR SPINDLE EMS-3060K 60,000 rpm

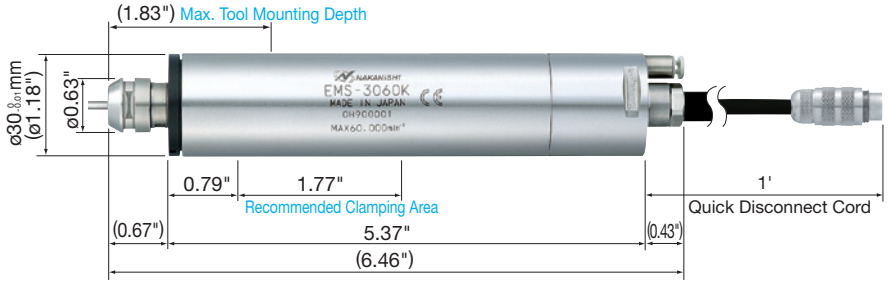

- Motor Speed ····· 60,000 rpm
- Spindle Accuracy ····· Within 1 µm
- Max. Output Power ····· 350W
- Standard Size Collet (CHK-3.175) ····· ø1/8"
- Weight ····· 1 lb. 3.93 oz.

< Optional >

- Collet (CHK-[][]) ····· ø0.5 mm~ø6.35 mm (See Page 6-p3 for details)
- Motor Cord ····· Length 10 ft, 12.1 ft, 18.7 ft, 25.3 ft
- Metal Saw Arbor (KCH-03) ····· For ø0.24" (I.D.) x ø1.18" (O.D.)
- Grindstone Arbor (AGM-03) ···· For grinding wheel with I.D. of ø5 mm
- Grindstone Flange (EGF-19) ····· ø19.05 (I.D.) x ø40 (O.D.)x 7 (W)mm

Brushless Motor Spindle

Product Code	Product Name	Standard Equipment · Accessories	
7593	EMS-3060K	• Collet ø1/8" (CHK-3.175) : 1 pc. • Collet Nut (K-265) : 1 pc. • Wrench (12 x 14) : 2 pcs.	

Note : Motor Cord is sold separately.

Product Code 7587 BRUSHLESS MOTOR SPINDLE EMS-3060A 60,000 rpm

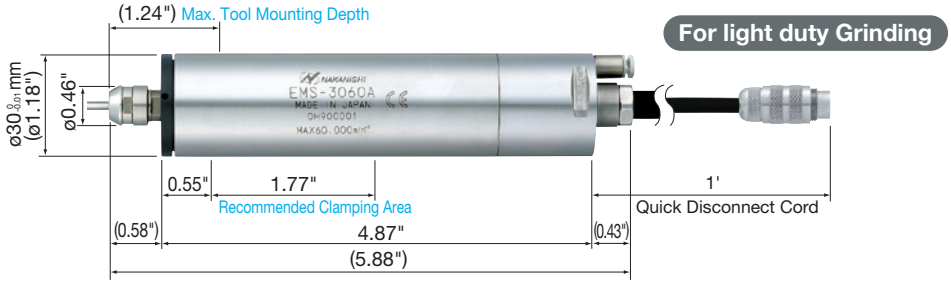

- Motor Speed ····· 60,000 rpm
- Spindle Accuracy ····· Within 1 µm
- Max. Output Power ····· 350W
- Standard Size Collet (CHA-3.175) ····· ø1/8"
- Weight ····· 1 lb. 1.46 oz.

< Optional >

- Collet (CHA-[][]) ····· ø0.5 mm~ø4.0 mm (See Page 6-p2 for details)
- Motor Cord ····· Length 10 ft, 12.1 ft, 18.7 ft, 25.3 ft

Brushless Motor Spindle

Product Code	Product Name	Standard Equipment · Accessories	
7587	EMS-3060A	• Collet ø1/8" (CHA-3.175) : 1 pc. • Collet Nut (CHN-A) : 1 pc. • Wrench (8 x 5), (9 x 11) : 1 pc. each	

Note : Motor Cord is sold separately.

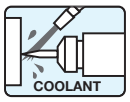

Caution : Use the motor at motor speed less than maximum allowable speed or use the speed reducer. DO NOT exceed the allowable motor speed for the spindle and the reducer.

Product Code 7596 BRUSHLESS MOTOR SPINDLE EMR-3008K

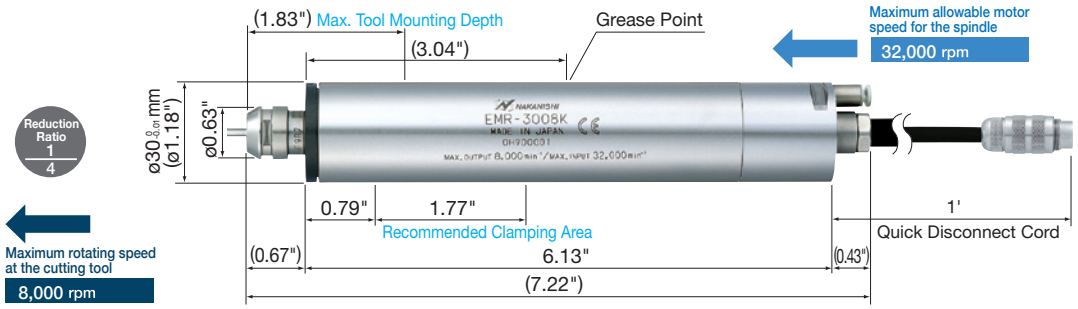

Maximum allowable motor speed for the spindle **32,000 rpm**

Maximum rotating speed at the cutting tool <Reduction Ratio : 1/4> **8,000 rpm**

- Spindle Accuracy ····· Within 1 µm
- Max. Output Power ····· 350W
- Standard Size Collet (CHK-3.175) ····· ø1/8"
- Weight ····· 1 lb. 6.93 oz.

< Optional >

- Collet (CHK-[][]) ····· ø0.5 mm~ø6.35 mm (See Page 6-p3 for details)
- Motor Cord ····· Length 10 ft, 12.1 ft, 18.7 ft, 25.3 ft
- Metal Saw Arbor (KCH-03) ····· For ø0.24" (I.D.) x ø1.18" (O.D.)
- Grindstone Arbor (AGM-03) ····· For grinding wheel with I.D. of ø5 mm

Brushless Motor Spindle

Product Code	Product Name	Standard Equipment · Accessories	
7596	EMR-3008K	• Collet ø1/8" (CHK-3.175) : 1 pc. • Collet Nut (K-265) : 1 pc. • Wrench (12 x 14) : 2 pcs. • Gear Grease (10 mL) • Grease Nipple : 1 pc.	

Note : Motor Cord is sold separately.

To extend the life expectancy of the Speed Reducer, inject grease every 70 to 100 hours. Grease injection prevents friction of the internal gears as well as heat generation. Adding grease also prevents the degradation of the existing grease in the reducer. Please maintain a reducer grease maintenance program.

MOTOR CORD

Product	Product Code	Description · Product Name	Length	Std. Accessories	Fit to	
	1778	Motor Cord 3M **EMCD-3000J-3M**	10 ft (3.0m)	• Air Hose • Connector Cap (Provided)	EMS-3060K EMS-3060A EMR-3008K	
	1768	Motor Cord 4M **EMCD-3000J-4M**	12.1 ft (3.7m)			
	1767	Motor Cord 6M **EMCD-3000J-6M**	18.7 ft (5.7m)			
	1766	Motor Cord 8M **EMCD-3000J-8M**	25.3 ft (7.7m)			

Torque Characteristics Graph

● EMS-3060K, EMS-3060A

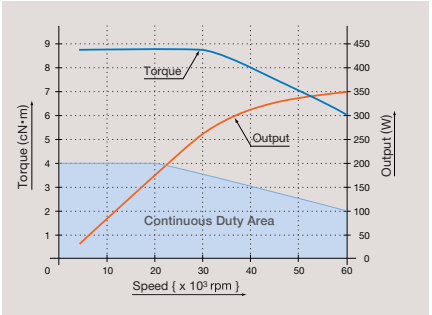

● EMR-3008K

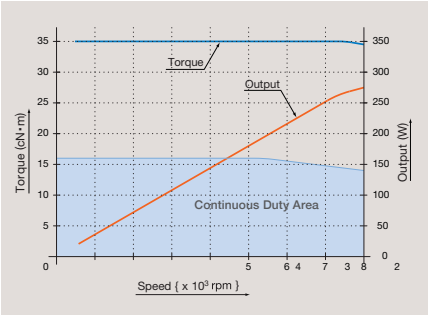

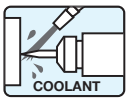

Product Code 7644 FLANGE TYPE BRUSHLESS MOTOR SPINDLE EMSF-3060K 60,000 rpm

Features:

- 30mm Spindle with a Pre-mounted (1.3" x 1.69") Flange.
- Pre-mounted flange for easy installation on a machines standard boring bar holder.
- Eliminates the chance of spindle damage due to over tightening.
- Flange is mountable on either side of the machines holder.

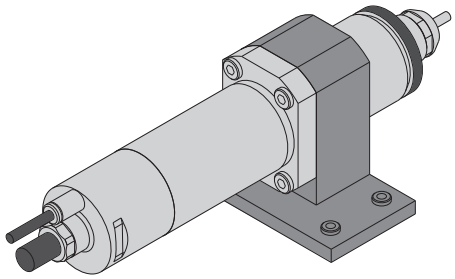

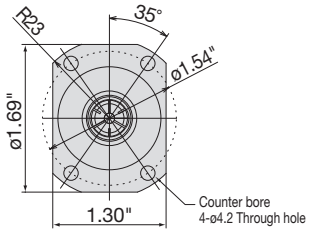

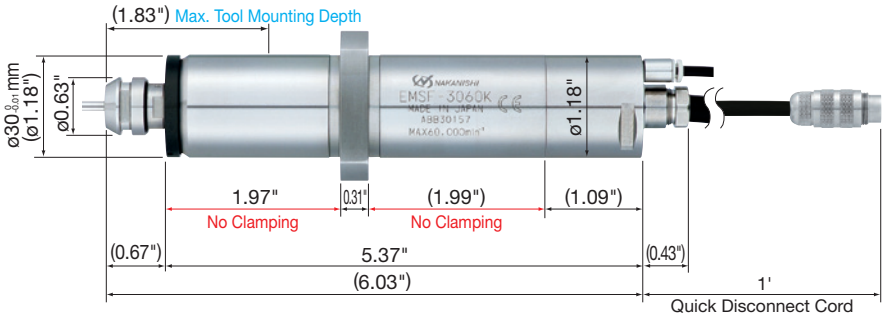

- Motor Speed ····· 60,000 rpm
- Spindle Accuracy ····· Within 1 µm
- Max. Output Power ····· 350W
- Standard Size Collet (CHK-3.175) ····· ø1/8"
- Weight ····· 1 lb. 5.87 oz.

< Optional >

- Collet (CHK-[][]) ····· ø0.5 mm~ø6.35 mm (See Page 6-p3 for details)
- Motor Cord ····· Length 10 ft, 12.1 ft, 18.7 ft, 25.3 ft
- Metal Saw Arbor (KCH-03) ····· For ø0.24" (I.D.) x ø1.18" (O.D.)
- Grindstone Arbor (AGM-03) ···· For grinding wheel with I.D. of ø5 mm
- Grindstone Flange (EGF-19) ····· ø19.05 (I.D.) x ø40 (O.D.)x 7 (W)mm

Flange Type Brushless Motor Spindle

Product Code	Product Name	Standard Equipment · Accessories	
7644	EMSF-3060K	• Collet ø1/8" (CHK-3.175) : 1 pc. • Collet Nut (K-265) : 1 pc. • Wrench (12 x 14) : 2 pcs. • Air Hose 0.3m : 1 pc. • Hex socket bolt (M4 x L16) : 4 pcs.	

Note : Motor Cord is sold separately.

Torque Characteristics Graph

- EMSF-3060K

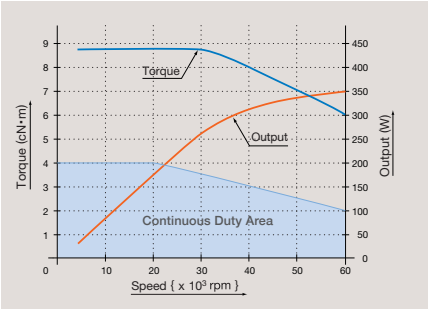

MOTOR CORD

Product	Product Code	Description · Product Name	Length	Std. Accessories	Fit to	
	1778	Motor Cord 3M **EMCD-3000J-3M**	10 ft (3.0m)	• Air Hose • Connector Cap (Provided)	EMSF-3060K	
	1768	Motor Cord 4M **EMCD-3000J-4M**	12.1 ft (3.7m)			
	1767	Motor Cord 6M **EMCD-3000J-6M**	18.7 ft (5.7m)			
	1766	Motor Cord 8M **EMCD-3000J-8M**	25.3 ft (7.7m)			

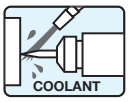

Product Code 7589 BRUSHLESS MOTOR SPINDLE EM30-S6000 60,000 rpm

Outside Diameter **ø1.18" (ø30mm)**

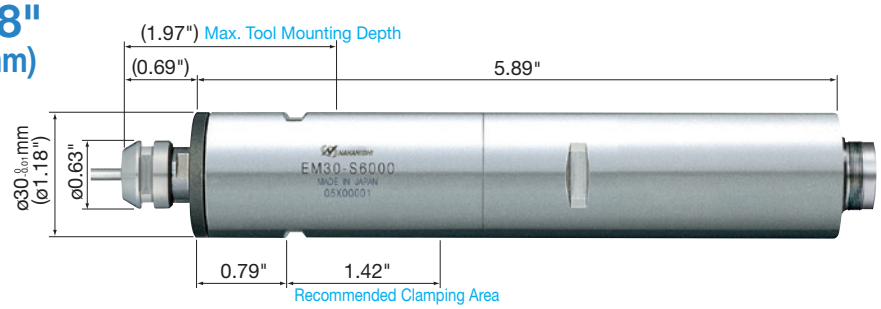

- Motor Speed ····· 60,000 rpm
- Spindle Accuracy ····· Within 1 µm
- Max. Output Power ····· 350 W
- Standard Size Collet (CHK-3.175) ····· ø1/8"
- Weight ····· 1 lb. 4.28 oz.

< Optional >

- Collet (CHK-[]) ····· ø0.5 mm~ø6.35 mm
  (See Page 6-p3 for details)

*High precision type is also available for CHK-3.0, 3.175, 4.0, 6.0, 6.35
Refer to 6-p3 page of this catalog.

- Motor Cord ····· Length 13 ft, 19 ft, 26 ft
- Metal Saw Arbor (KCH-03) ····· For ø0.24" (I.D.) x ø1.18" (O.D.)
- Grindstone Arbor (AGM-03) ···· For grinding wheel with I.D. of ø5 mm
- Grindstone Flange (EGF-19) ····· ø19.05 (I.D.) x ø40 (O.D.)x 7 (W)mm

Brushless Motor Spindle ø1.18"(ø30 mm)

Product Code	Product Name	Standard Equipment · Accessories	
7589	EM30-S6000	• Collet ø1/8" (CHK-3.175) : 1 pc. • Collet Nut (K-265) : 1 pc. • Wrench (12 x 14) : 2 pcs.	

Note : Motor Cord is sold separately.

Product Code 7583 BRUSHLESS MOTOR SPINDLE EM25-S6000 60,000 rpm

Outside Diameter **ø0.98" (ø25mm)**

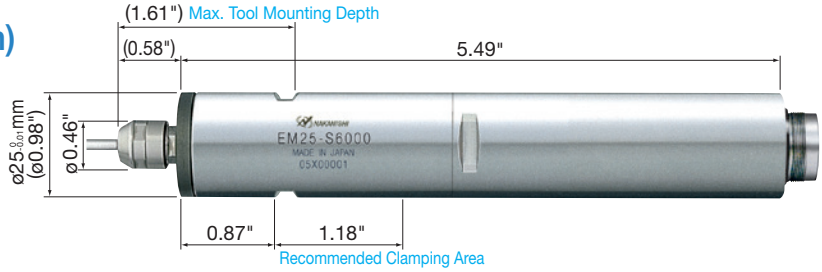

- Motor Speed ····· 60,000 rpm
- Spindle Accuracy ····· Within 1 µm
- Max. Output Power ····· 250 W
- Standard Size Collet (CHA-3.175) ····· ø1/8"
- Weight ····· 13.23 oz.

< Optional >

- Collet (CHA-[]) ····· ø0.5 mm~ø4.0 mm
  (See Page 6-p2 for details)
- Motor Cord ····· Length 13 ft, 19 ft, 26 ft

Brushless Motor Spindle ø0.98"(ø25 mm)

Product Code	Product Name	Standard Equipment · Accessories	
7583	EM25-S6000	• Collet ø1/8" (CHA-3.175) : 1 pc. • Collet Nut (CHN-A) : 1 pc. • Wrench (8 x 5), (9 x 11) : 1 pc. each	

Note : Motor Cord is sold separately.

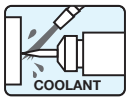

Product Code 7584 BRUSHLESS MOTOR SPINDLE EM20-S6000 60,000 rpm

Outside Diameter **ø0.79" (ø20mm)**

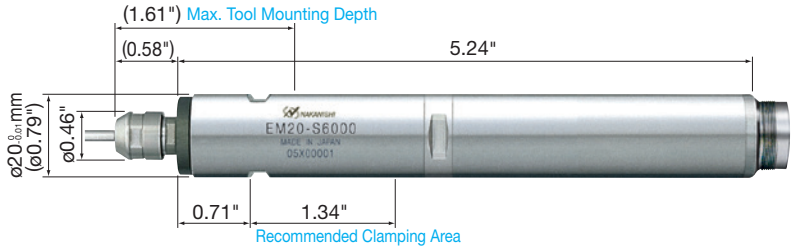

- Motor Speed ····· 60,000 rpm
- Spindle Accuracy ····· Within 1 µm
- Max. Output Power ····· 250 W
- Standard Size Collet (CHA-3.175) ····· ø1/8"
- Weight ····· 8.11 oz.

< Optional >

- Collet (CHA-[][]) ····· ø0.5 mm~ø4.0 mm (See Page 6-p2 for details)
- Motor Cord ····· Length 13 ft, 19 ft, 26 ft

Brushless Motor Spindle ø0.79"(ø20 mm)

Product Code	Product Name	Standard Equipment · Accessories	
7584	EM20-S6000	• Collet ø1/8" (CHA-3.175) : 1 pc. • Collet Nut (CHN-A) : 1 pc. • Wrench (8 x 5), (9 x 11) : 1 pc. each	

Note : Motor Cord is sold separately.

MOTOR CORD Straight Type

Product	Product Code	Description · Product Name	Length	Std. Accessories	Fit to	
	1748	Motor Cord 4M EMCD-3000-4M	13 ft	• Air Hose • Connector Cap (Provided)	EM30-S6000 EM25-S6000 EM20-S6000	
	1749	Motor Cord 6M EMCD-3000-6M	19 ft			
	1750	Motor Cord 8M EMCD-3000-8M	26 ft			

MOTOR CORD 90° Angle Type

Product	Product Code	Description · Product Name	Length	Std. Accessories	Fit to	
	1744	Motor Cord 4M EMCD-3000A-4M	13 ft	• Air Hose • Connector Cap (Provided)	EM30-S6000 EM25-S6000 EM20-S6000	
	1743	Motor Cord 6M EMCD-3000A-6M	19 ft			
	1742	Motor Cord 8M EMCD-3000A-8M	26 ft			

Torque Characteristics Graph

● EM30-S6000

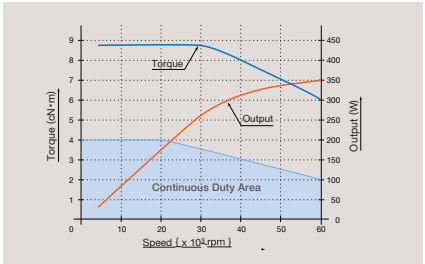

● EM20-S6000, EM25-S6000

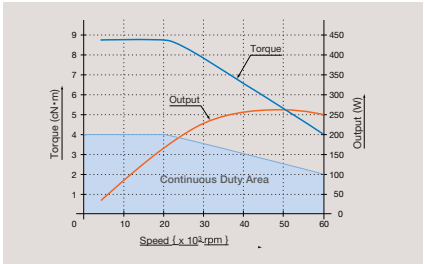

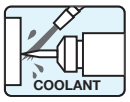

Caution : Use the motor at motor speed less than maximum allowable speed or use the speed reducer. DO NOT exceed the allowable motor speed for the spindle and the reducer.

Product Code 7601 — 90°ANGLE BRUSHLESS MOTOR SPINDLE EMA-3020K

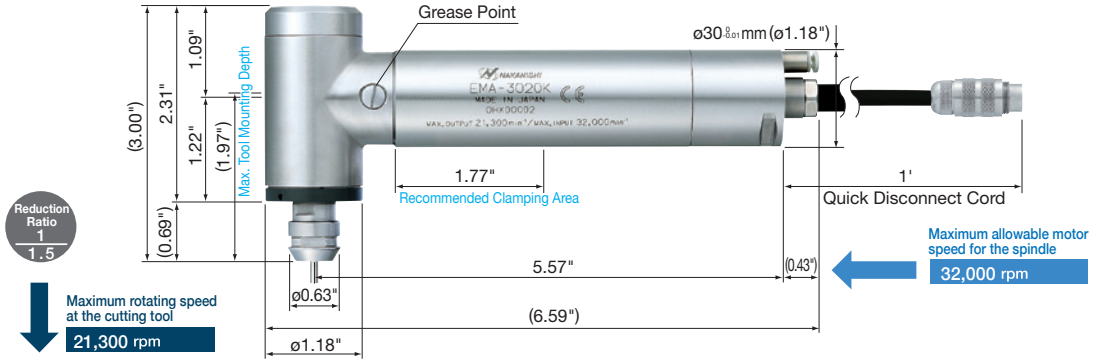

Maximum allowable motor speed for the spindle **32,000 rpm**

Maximum rotating speed at the cutting tool <Reduction Ratio : 1/1.5> **21,300 rpm**

- Spindle Accuracy ····· Within 2 µm
- Max. Output Power ····· 280W
- Standard Size Collet (CHK-3.175) ····· ø1/8"
- Weight ····· 1 lb. 10.81 oz.

< Optional >

- Collet (CHK-[][]) ····· ø0.5 mm~ø6.35 mm (See Page 6-p3 for details)
- Motor Cord ····· Length 10 ft, 12.1 ft, 18.7 ft, 25.3 ft
- Metal Saw Arbor (KCH-03) ····· For ø0.24" (I.D.) x ø1.18" (O.D.)
- Grindstone Arbor (AGM-03) ···· For grinding wheel with I.D. of ø5 mm

90° Angle Brushless Motor Spindle

Product Code	Product Name	Standard Equipment · Accessories	
7601	EMA-3020K	• Collet ø1/8" (CHK-3.175) : 1 pc. • Collet Nut (K-265) : 1 pc. • Wrench (12 x 14) : 2 pcs. • Gear Grease (10 mL) • Grease Nipple : 1 pc.	

Note : Motor Cord is sold separately.

To extend the life expectancy of the Speed Reducer, inject grease every 70 to 100 hours. Grease injection prevents friction of the internal gears as well as heat generation. Adding grease also prevents the degradation of the existing grease in the reducer. Please maintain a reducer grease maintenance program.

Product Code 7605 — 90°ANGLE BRUSHLESS MOTOR SPINDLE EMA-3020S

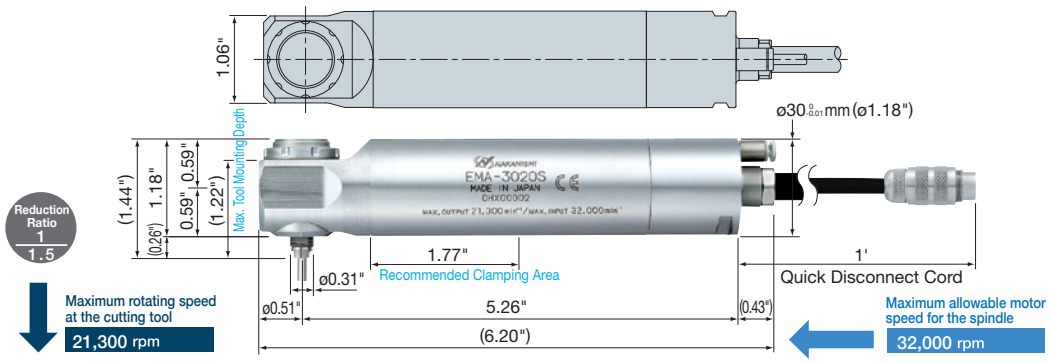

Maximum allowable motor speed for the spindle **32,000 rpm**

Maximum rotating speed at the cutting tool <Reduction Ratio : 1/1.5> **21,300 rpm**

- Spindle Accuracy ····· Within 3 µm
- Max. Output Power ····· 275W
- Standard Size Collet (CHSS-3.175) ····· ø1/8"
- Weight ····· 1 lb. 5.34 oz.

< Optional >

- Collet (CHSS-[][]) ····· ø1.0 mm~ø3.175 mm (See Page 6-p4 for details)
- Motor Cord ····· Length 10 ft, 12.1 ft, 18.7 ft, 25.3 ft

90° Angle Brushless Motor Spindle

Product Code	Product Name	Standard Equipment · Accessories	
7605	EMA-3020S	• Collet ø1/8" (CHSS-3.175) : 1 pc. • Wrench (7 x 5.1), (8 x 6.1) : 1 pc.each	

Note : Motor Cord is sold separately.

MOTOR CORD

Product	Product Code	Description · Product Name	Length	Std. Accessories	Fit to	
	1778	Motor Cord 3M **EMCD-3000J-3M**	10 ft (3.0m)	• Air Hose • Connector Cap (Provided)	EMA-3020K EMA-3020S	
	1768	Motor Cord 4M **EMCD-3000J-4M**	12.1 ft (3.7m)			
	1767	Motor Cord 6M **EMCD-3000J-6M**	18.7 ft (5.7m)			
	1766	Motor Cord 8M **EMCD-3000J-8M**	25.3 ft (7.7m)			

Torque Characteristics Graph

● EMA-3020K, EMA-3020S

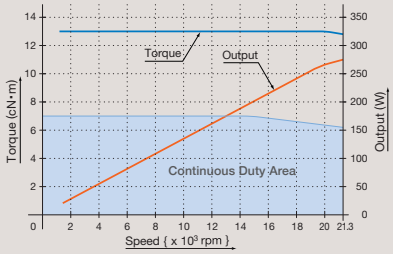

Product Code 4504 AIR LINE KIT AL-C1204

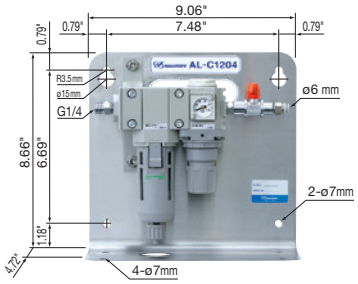

●The AL-C1204 Air Line Kit is designed to deliver clean, dry air to Electric Motors via the Controller. The filter removes small amounts of debris while the adjustable regulator provides the correct air pressure for cooling and purging.

Air Line Kit (For ø6 mm Hose · Filter Mesh 0.3 µm)

Product Code	Product Name	Standard Equipment · Accessories	
4504	AL-C1204	• Air Filter • Air Regulator • Air Pressure Gauge • Air ON-OFF Valve • Hose for Piping (K-275) : 6 ft	

Rotary Coupling

An electric/pneumatic coupling is now available that allows NAKANISHI Electric Spindles up to 30mm diameter, to be mounted to the turret of a CNC turning machine. The rotary coupling prevents power cable and pneumatic lines from getting tangled when the turret is rotated. Contact NSK America at 800-585-4675 for complete details.

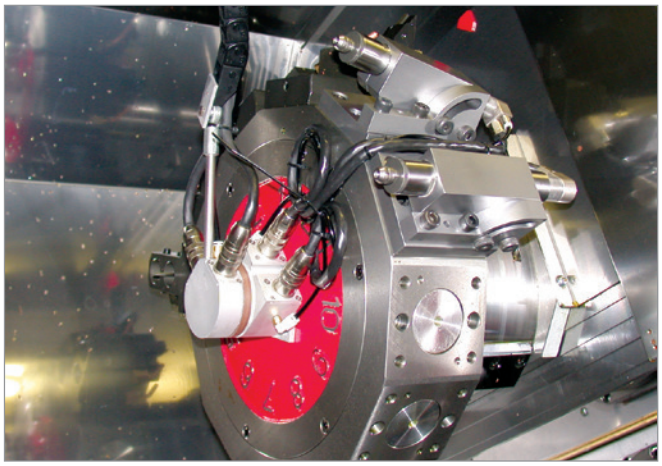

1
EmaxEVO
ESPERT
ROTUS
IMPULSE
PRESTO II
Sheenus ZERO
2
iSpeed3
E2000 ø1.0"/ø0.98"/ø0.897"
E3000 – One Piece
E3000 – Modular ø1.18"
ø1.0"/ø0.98" ø0.897"
E3000 – 80,000rpm
E4000
3
MA
ø0.897"
ø1.0" ø0.98"
ø1.18"
MS
ø0.75" ø0.79"
ø0.87" ø0.91"
ø1.0" ø0.98"
4
HES
iSpeed5
HTS
HPS
PLANET
Xpeed
ABT
5
AIR LINE KIT
6
PARTS
7
TECHNICAL DATA
8
APPLICATION EXAMPLES
INDEX

- 1,000~60,000 rpm
- Maximum Output 350W
- Auto or Manual Control Modes.
- Can be installed on Special-Purpose Machines, NC Lathes, Robots, etc.
- Motor speed is displayed accurately on the front panel.

Modular Type ø1.18"(ø30 mm) System Chart

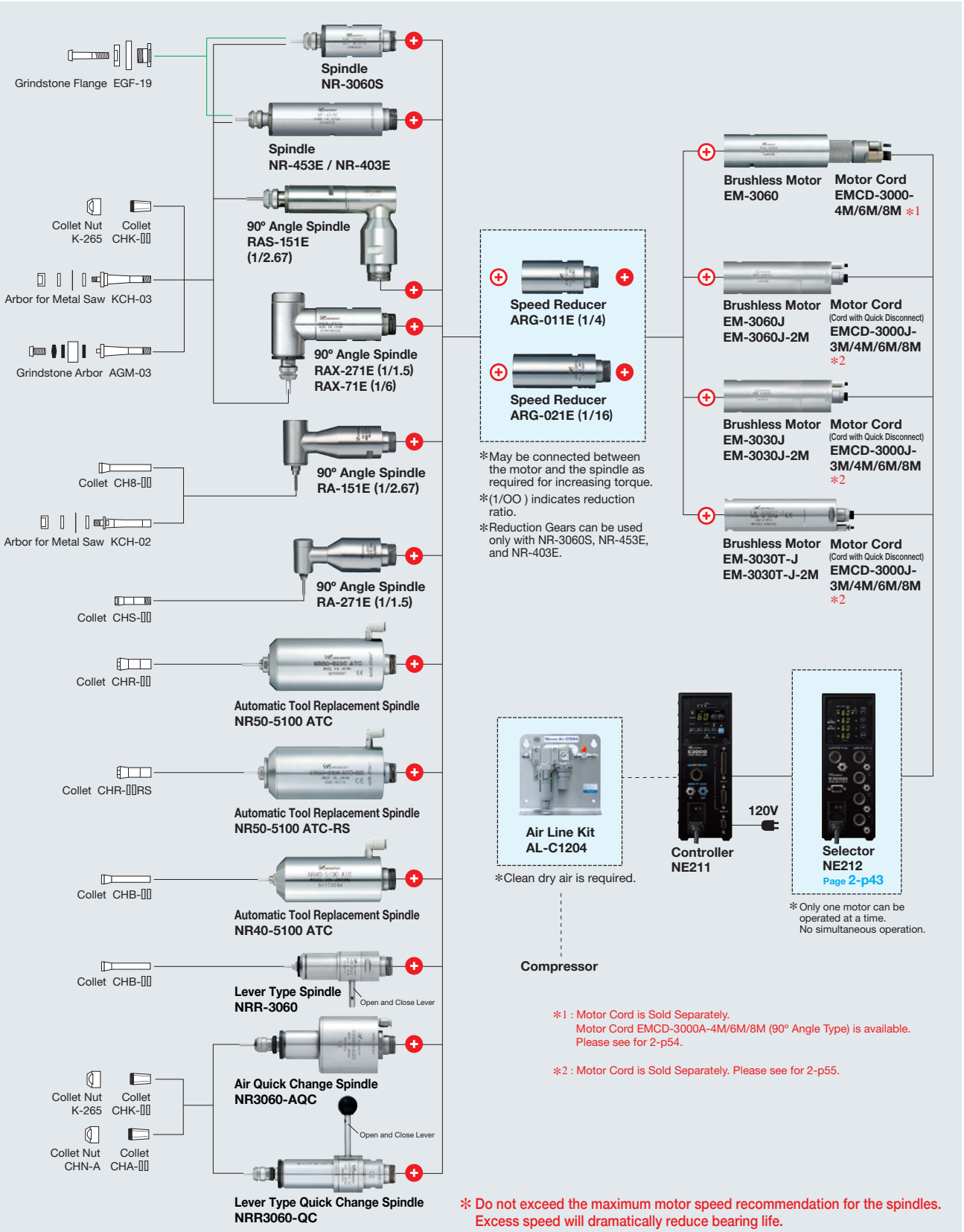

*1 : Motor Cord is Sold Separately.
Motor Cord EMCD-3000A-4M/6M/8M (90° Angle Type) is available.
Please see for 2-p54.

*2 : Motor Cord is Sold Separately. Please see for 2-p55.

* Do not exceed the maximum motor speed recommendation for the spindles. Excess speed will dramatically reduce bearing life.

- AC100-240V for international operation
- 1,000~60,000 rpm
- Maximum Output 350W
- ø0.79"(ø20 mm), ø0.897"(ø22.8 mm), ø0.98"(ø25 mm), ø1.0"(ø25.4 mm), ø1.18"(ø30 mm) spindles are available.

Product Code 9775 CONTROLLER NE211 60,000 rpm

✻: Load Meter



- : Continuous load area
- : Intermittent load area
- : Overload

[1] Load Meter*
[2] Running LED (RUN)
[3] Warning LED (WARNING)
[4] Error LED (ERROR)
[5] Error Reset Switch (RESET)
[6] Gear Setting Switch (GEAR)
[7] Control Switch (AUTO/MANUAL)
[8] Rotating Direction Selector Switch (FWD./REV.)
[9] Start Switch (START)
[10] Motor Speed Adjustment Switch (SPEED)
[11] Display

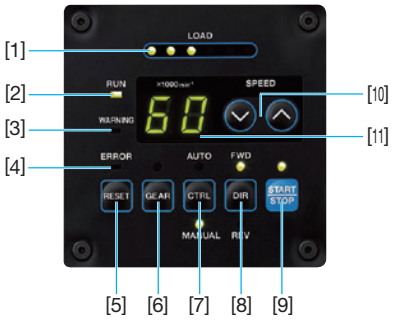

Specifications

Product Name	: NE211
Power Source	: AC120V
Motor Speed	: 1,000-60,000 rpm
Max. Output Power	: 350W
Power Consumption	: 1.8A
Air Flow Volume	: 1.0CFM (36-44PSI)
Weight	: 6 lb. 2.77 oz.
Dimensions	: W3.46" x D5.43" x H9.37"

E3000 Controller

Product Code	Plug Type	Product Name	Standard Equipment · Accessories	
9775	120V (B type)	NE211	• Power Cord : 6 ft • Air Hose with filter • Reducer • Connector Cap (Provided) • Bracket • Nylon Clip • Screw • Rubber Pad • Fuse (T6.3AL) 250V: 2 pcs.	

*Please refer to Technical Data 7-p2~p9 in detail about External Input-Output Connector.
*AC100-240V for international operation. Please check the power source plug type and order accordingly.

Interface Cable
Page 2-p66



● Power Source Plug

Plug Type	Main Usable Area	Product
For 120V (B type)	For U.S.A. and Canada	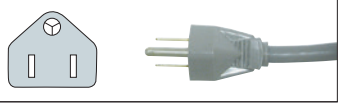

Product Code 1597 BRUSHLESS MOTOR EM-3060 60,000 rpm



Note : Motor Cord is sold separately. Please select a cord from the list below.

⚠ Motor Cord EMCD-3000J-3M / 4M / 6M / 8M on page 2-p55 can not used for this motor.

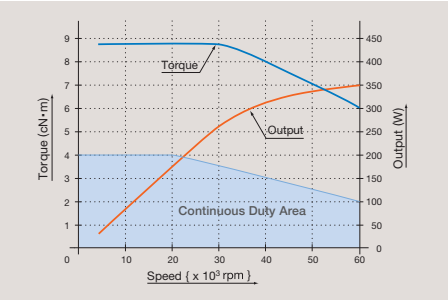

- Motor Speed ····· 1,000~60,000 rpm
- Max. Output Power ····· 350W
- Housing ····· Stainless steel (SUS416)
- Weight ····· 11.46 oz. (w/o Cord)

Brushless Motor

Product Code	Product Name	Standard Equipment · Accessories	
1597	EM-3060	• Wrench (22 x 27) : 1 pc.	

MOTOR CORD Straight Type

Product	Product Code	Description · Product Name	Length	Std. Accessories	Fit to	
	1748	Motor Cord 4M EMCD-3000-4M	13 ft	• Air Hose • Connector Cap (Provided)	EM-3060	
	1749	Motor Cord 6M EMCD-3000-6M	19 ft			
	1750	Motor Cord 8M EMCD-3000-8M	26 ft			

MOTOR CORD 90° Angle Type

Product	Product Code	Description · Product Name	Length	Std. Accessories	Fit to	
	1744	Motor Cord 4M EMCD-3000A-4M	13 ft	• Air Hose • Connector Cap (Provided)	EM-3060	
	1743	Motor Cord 6M EMCD-3000A-6M	19 ft			
	1742	Motor Cord 8M EMCD-3000A-8M	26 ft			

Caution : Brushless Motor with 6.5 ft (2 m) long quick disconnect cord can not used with EMCD-3000J-8M.

BRUSHLESS MOTOR EM-3060J 60,000 rpm

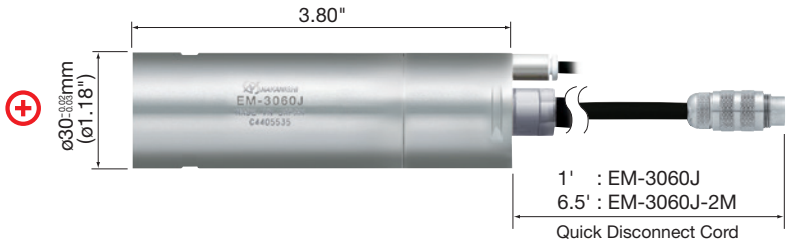

Note : Motor Cord is sold separately. Please select a cord from the list below.

EMCD-3000-4M / 6M / 8M and EMCD-3000A-4M / 6M / 8M on page 2-p54 can not used for this motor.

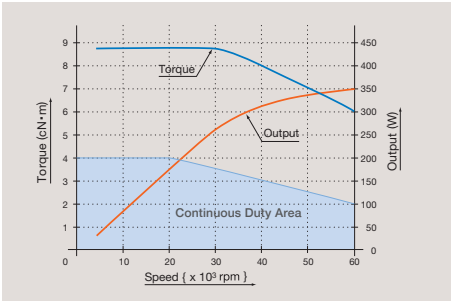

- Motor Speed ····· 1,000~60,000 rpm
- Max. Output Power ····· 350W
- Housing ····· Stainless steel (SUS416)
- Weight ····· 12.70 oz. (w/o Cord)

Brushless Motor with 1 ft Cord

Product Code	Product Name	Standard Equipment · Accessories	
1765	EM-3060J	• Wrench (22 x 27) : 1 pc.	

Brushless Motor with 6.5 ft Cord

Product Code	Product Name	Standard Equipment · Accessories	
1779	EM-3060J-2M	• Wrench (22 x 27) : 1 pc.	

*EMCD-3000J-8M (25.3 ft / 8m long) can not be used for this motor.

MOTOR CORD

Product	Product Code	Description · Product Name	Length	Std. Accessories	Fit to	
	1778	Motor Cord 3M **EMCD-3000J-3M**	10 ft (3.0m)	• Air Hose • Connector Cap (Provided)	EM-3060J EM-3060J-2M	
	1768	Motor Cord 4M **EMCD-3000J-4M**	12.1 ft (3.7m)			
	1767	Motor Cord 6M **EMCD-3000J-6M**	18.7 ft (5.7m)			
	1766	Motor Cord 8M **EMCD-3000J-8M**	25.3 ft (7.7m)		EM-3060J	

Caution : Brushless Motor with 6.5 ft (2 m) long quick disconnect cord can not used with EMCD-3000J-8M.

BRUSHLESS MOTOR EM-3030T-J 30,000 rpm

Torque Type

● EM-3030T-J is designed for high performance (power and torque) at a lower rpm.

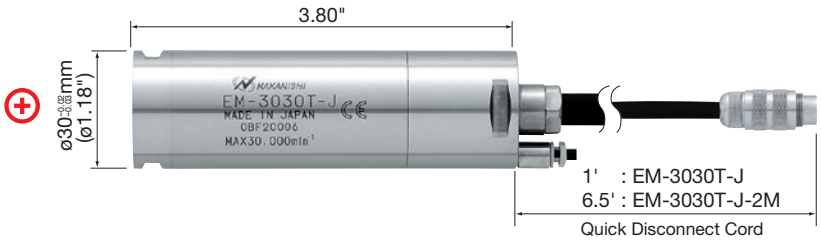

Note : Motor Cord is sold separately. Please select a cord from the list below.

EMCD-3000-4M / 6M / 8M and EMCD-3000A-4M / 6M / 8M on page 2-p54 can not used for this motor.

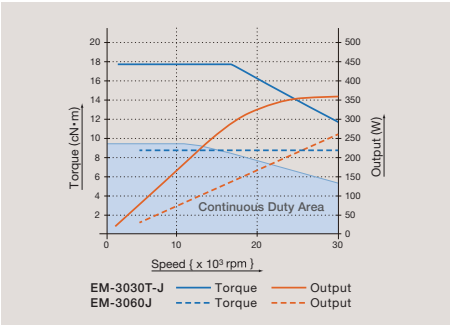

- Motor Speed ····· 1,000~30,000 rpm
- Max. Output Power ····· 350W
- Housing ····· Stainless steel (SUS416)
- Weight ····· 14.64 oz. (w/o Cord)

Brushless Motor with 1 ft Cord

Product Code	Product Name	Standard Equipment · Accessories	
7358	EM-3030T-J	• Wrench (22 x 27) : 1 pc.	

Brushless Motor with 6.5 ft Cord

Product Code	Product Name	Standard Equipment · Accessories	
7359	EM-3030T-J -2M	• Wrench (22 x 27) : 1 pc.	

*EMCD-3000J-8M (25.3 ft / 8m long) can not be used for this motor.

This Brushless Motor should be connected to the Applicable E3000 CONTROLLER.

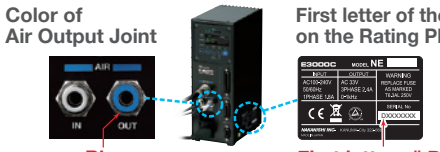

MOTOR CORD

Product	Product Code	Description · Product Name	Length	Std. Accessories	Fit to	
	1778	Motor Cord 3M EMCD-3000J-3M	10 ft (3.0m)	• Air Hose • Connector Cap (Provided)	EM-3030T-J EM-3030T-J-2M	
	1768	Motor Cord 4M EMCD-3000J-4M	12.1 ft (3.7m)			
	1767	Motor Cord 6M EMCD-3000J-6M	18.7 ft (5.7m)			
	1766	Motor Cord 8M EMCD-3000J-8M	25.3 ft (7.7m)		EM-3030T-J	



Ask an NSK representative for a demonstration of our products or a cost savings analysis.

1
EmaxEVO
ESPERT
ROTUS
IMPULSE
PRESTO II
Sheenus ZERO
2
iSpeed3
E2000 ø1.0"/ø0.98"/ø0.897"
E3000 – One Piece
E3000 – Modular ø1.18"
ø1.0"/ø0.98" ø0.897"
E3000 – 80,000rpm
E4000
3
MA
ø0.897"
ø1.0" ø0.98"
ø1.18"
MS
ø0.75" ø0.79"
ø0.87" ø0.91"
ø1.0" ø0.98"
4
HES
iSpeed5
HTS
HPS
PLANET
Xpeed
ABT
5
AIR LINE KIT
6
PARTS
7
TECHNICAL DATA
8
APPLICATION EXAMPLES
INDEX

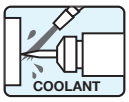

E3000 Series can be used in conjunction with water or oil based coolants.

Product Code 7590 SPINDLE NR-3060S (Ceramic Bearing) 60,000 rpm

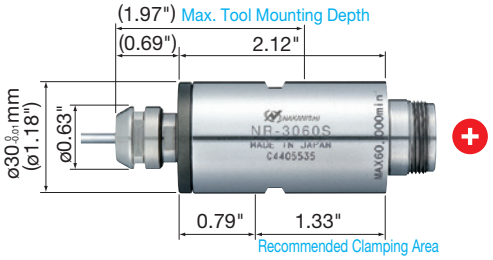

- Allowable Motor Speed ····· 60,000 rpm
- Spindle Accuracy ····· Within 1 µm
- Standard Size Collet (CHK-3.175) ····· ø1/8"
- Weight ····· 9.17 oz.

< Optional >

- Collet (CHK-[]) ····· ø0.5 mm~ø6.35 mm (See Page 6-p3 for details)
- Collet Nut (K-265) ····· For Collet (CHK)
- Metal Saw Arbor (KCH-03) ····· For ø0.24" (I.D.) x ø1.18" (O.D.)
- Grindstone Arbor (AGM-03) ···· For grinding wheel with I.D. of ø5 mm
- Grindstone Flange (EGF-19) ····· ø19.05 (I.D.) x ø40 (O.D.) x 7 (W) mm

● This spindle can be used for small-diameter milling, drilling, slitting, chamfering, grinding, etc.

Spindle

Product Code	Product Name	Standard Equipment · Accessories	
7590	NR-3060S	• Collet ø1/8" (CHK-3.175) • Collet Nut (K-265) : 1 pc. • Wrench (12 x 14) : 2 pcs., (22 x 27) : 1 pc.	

Product Code ASE1566 SPINDLE NR-453E (Ceramic Bearing) 50,000 rpm

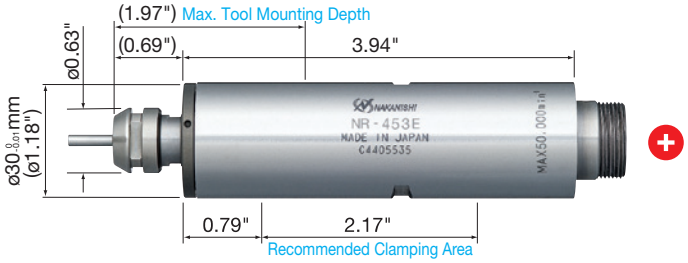

- Allowable Motor Speed ····· 50,000 rpm
- Spindle Accuracy ····· Within 1 µm
- Standard Size Collet (CHK-3.175) ····· ø1/8"
- Weight ····· 15.52 oz.

< Optional >

- Collet (CHK-[]) ····· ø0.5 mm~ø6.35 mm (See Page 6-p3 for details)
- Collet Nut (K-265) ····· For Collet (CHK)
- Metal Saw Arbor (KCH-03) ····· For ø0.24" (I.D.) x ø1.18" (O.D.)
- Grindstone Arbor (AGM-03) ···· For grinding wheel with I.D. of ø5 mm
- Grindstone Flange (EGF-19) ····· ø19.05 (I.D.) x ø40 (O.D.) x 7 (W) mm

● This spindle can be used for small-diameter milling, drilling, slitting, chamfering, grinding, etc.

Spindle

Product Code	Product Name	Standard Equipment · Accessories	
ASE1566	NR-453E	• Collet ø1/8" (CHK-3.175) • Collet Nut (K-265) : 1 pc. • Wrench (12 x 14) : 2 pcs., (22 x 27) : 1 pc.	

*Do not exceed the allowable motor speed for the spindle.

COOLANT

Product Code ASE1514 SPINDLE NR-403E 40,000 rpm



- Allowable Motor Speed ····· 40,000 rpm
- Spindle Accuracy ····· Within 1 µm
- Standard Size Collet (CHK-3.175) ····· ø1/8"
- Weight ····· 15.52 oz.

< Optional >

- Collet (CHK-[][]) ····· ø0.5 mm~ø6.35 mm (See Page 6-p3 for details)
- Collet Nut (K-265) ····· For Collet (CHK)
- Metal Saw Arbor (KCH-03) ····· For ø0.24" (I.D.) x ø1.18" (O.D.)
- Grindstone Arbor (AGM-03) ··· For grinding wheel with I.D. of ø5 mm
- Grindstone Flange (EGF-19) ····· ø19.05 (I.D.) x ø40 (O.D.) x 7 (W) mm

● This spindle can be used for small-diameter milling, drilling, slitting, chamfering, grinding, etc.

Spindle

Product Code	Product Name	Standard Equipment · Accessories	
ASE1514	NR-403E	• Collet ø1/8" (CHK-3.175) • Collet Nut (K-265) : 1 pc. • Wrench (12 x 14) : 2 pcs., (22 x 27) : 1 pc.	

*Do not exceed the allowable motor speed for the spindle.

COOLANT

Caution : Use the motor at motor speed less than maximum allowable speed or use the speed reducer. DO NOT exceed the allowable motor speed for the spindle and the reducer.

Product Code ASE1559 — 90°ANGLE SPINDLE RAS-151E

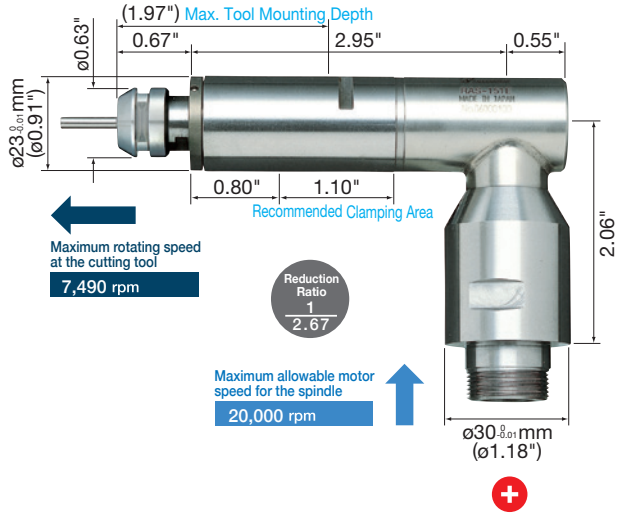

Maximum allowable motor speed for the spindle 20,000 rpm

Maximum rotating speed at the cutting tool <Reduction Ratio : 1/2.67> 7,490 rpm

- Spindle Accuracy ····· Within 2 µm
- Standard Size Collet (CHK-3.175) ····· ø1/8"
- Weight ····· 14.57 oz.

< Optional >

- Collet (CHK-▯▯) ····· ø0.5 mm~ø6.35 mm (See Page 6-p3 for details)
- Collet Nut (K-265) ····· For Collet (CHK)
- Metal Saw Arbor (KCH-03) ····· For ø0.24" (I.D.) x ø1.18" (O.D.)
- Grindstone Arbor (AGM-03)···· For grinding wheel with I.D. of ø5 mm

●90˚Angle Type Spindle can use up to a ø1/4"(ø6.35 mm) collet and is suitable for installation where space restrictions exist.

90˚ Angle Spindle

Product Code	Product Name	Standard Equipment · Accessories	
ASE1559	RAS-151E	• Collet ø1/8" (CHK-3.175) • Collet Nut (K-265) : 1 pc. • Wrench (12 x 14) : 2 pcs., (22 x 27) : 1 pc.	

Product Code ASE1579 — 90° ANGLE SPINDLE RAX-271E (Speed Reduction Ratio 1/1.5)

Product Code ASE1576 — 90° ANGLE SPINDLE RAX-71E (Speed Reduction Ratio 1/6)

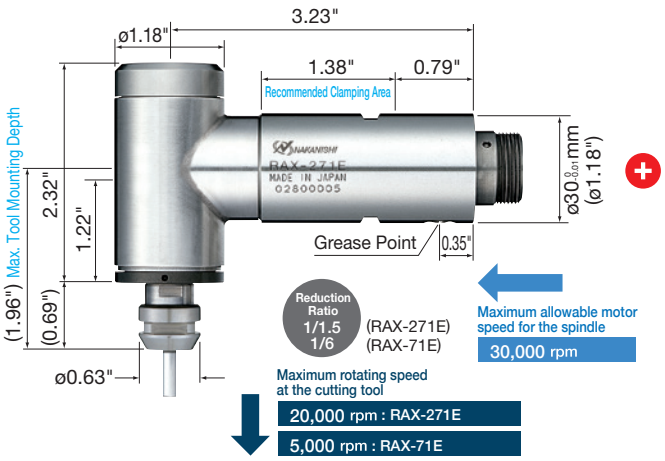

Maximum allowable motor speed for the spindle 30,000 rpm

Maximum rotating speed at the cutting tool
RAX-271E <Reduction Ratio : 1/1.5> 20,000 rpm
RAX-71E <Reduction Ratio : 1/6> 5,000 rpm

- Spindle Accuracy ····· Within 2 µm
- Standard Size Collet (CHK-3.175) ····· ø1/8"
- Weight ····· 1 lb. 4.46 oz.

< Optional >

- Collet (CHK-▯▯) ····· ø0.5 mm~ø6.35 mm (See Page 6-p3 for details)
- Collet Nut (K-265) ····· For Collet (CHK)
- Metal Saw Arbor (KCH-03) ····· For ø0.24" (I.D.) x ø1.18" (O.D.)
- Grindstone Arbor (AGM-03)···· For grinding wheel with I.D. of ø5 mm

●This spindle can be used for working on corners difficult to work or unfit for working with straight type, drilling on side face, etc.

90˚ Angle Spindle

Product Code	Product Name	Standard Equipment · Accessories	
ASE1579	RAX-271E	• Collet ø1/8" (CHK-3.175) • Collet Nut (K-265) : 1 pc. • Wrench (12 x 14) : 2 pcs., (22 x 27) : 1 pc.	
ASE1576	RAX-71E	• Gear Grease (10mL) • Grease Nipple : 1 pc.	

To extend the life expectancy of the Speed Reducer, inject grease every 70 to 100 hours. Grease injection prevents friction of the internal gears as well as heat generation. Adding grease also prevents the degradation of the existing grease in the reducer. Please maintain a reducer grease maintenance program.

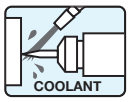

Caution : Use the motor at motor speed less than maximum allowable speed or use the speed reducer. DO NOT exceed the allowable motor speed for the spindle and the reducer.

Product Code ASE1505 — 90°ANGLE SPINDLE RA-151E

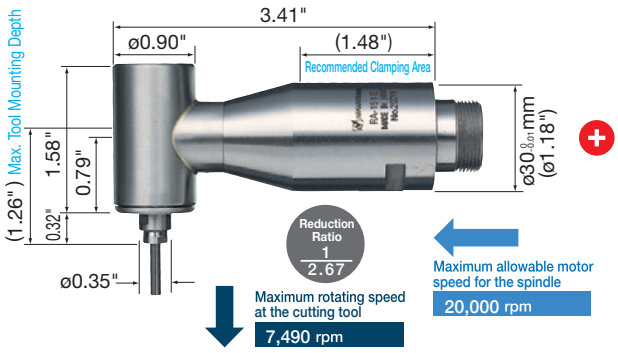

● This spindle is capable of working on corners difficult to work or unfit for working with straight type, drilling on side face and, slitting of aluminum, brass, etc. with the use of ø1.18"(ø30 mm) Metal Saw.

Maximum allowable motor speed for the spindle 20,000 rpm

Maximum rotating speed at the cutting tool <Reduction Ratio : 1/2.67> 7,490 rpm

- Standard Size Collet (CH8-3.175) ····· ø1/8"
- Weight ····· 13.58 oz.

< Optional >

- Collet (CH8-[][]) ····· ø0.8 mm~ø3.175 mm
  (See Page 6-p5 for details)
- Metal Saw Arbor (KCH-02) ····· For ø0.24" (I.D.) x ø1.18" (O.D.)

90˚ Angle Spindle

Product Code	Product Name	Standard Equipment · Accessories	
ASE1505	RA-151E	• Collet ø1/8" (CH8-3.175) : 1 pc. • Wrench (7 x 5.5), (8 x 5), (22 x 27) : 1 pc. each	

Product Code ASE1506 — 90°ANGLE SPINDLE RA-271E

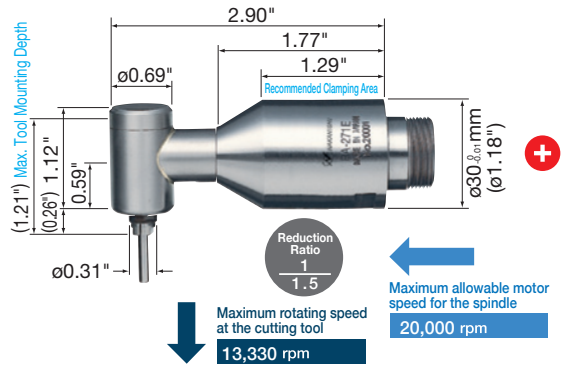

● This spindle can be used for working on corners difficult to work or unfit for working with straight type, drilling on side face, etc.

Maximum allowable motor speed for the spindle 20,000 rpm

Maximum rotating speed at the cutting tool <Reduction Ratio : 1/1.5> 13,330 rpm

- Standard Size Collet (CHS-3.175) ····· ø1/8"
- Weight ····· 8.47 oz.

< Optional >

- Collet (CHS-[][]) ····· ø0.8 mm~ø3.175 mm
  (See Page 6-p4 for details)

90˚ Angle Spindle

Product Code	Product Name	Standard Equipment · Accessories	
ASE1506	RA-271E	• Collet ø1/8" (CHS-3.175) : 1 pc. • Wrench (7 x 5.1), (8 x 5), (22 x 27) : 1 pc. each	

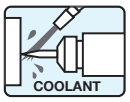

Product Code 1580 AUTOMATIC TOOL REPLACEMENT SPINDLE NR50-5100 ATC 50,000 rpm

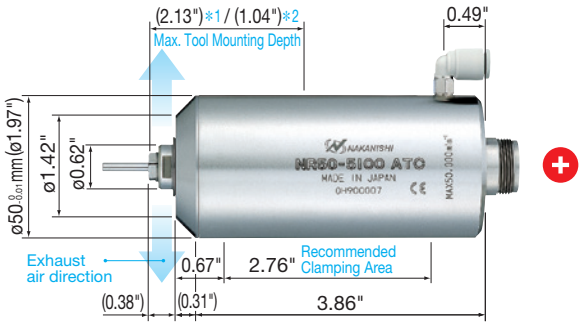

*1 : When the tool shank diameter is less than 1/8"
*2 : When the tool shank diameter is between 4.0mm and 1/4"

● Specially designed for easy tool replacement. The cutting tool can be exchanged automatically by supplying air to the spindle. This high-precision spindle utilizes high precision bearings.

- Allowable Motor Speed ····· 50,000 rpm
- Spindle Accuracy ····· Within 1 µm
- Air for Collet Opening ····· 80~87PSI
- Standard Size Collet (CHR-3.175) ····· ø1/8"
- Weight ····· 3 lb. 0.33 oz.

< Optional >
- Collet (CHR-[][]) ····· ø2.0, ø3.0 mm, ø1/8", ø4.0, ø6.0 mm, ø1/4"
(See Page 6-p4 for details)

Automatic Tool Replacement Spindle

Product Code	Product Name	Standard Equipment · Accessories	
1580	NR50-5100 ATC	• Collet ø1/8" (CHR-3.175) • Air Hose with filter (K-251) : ø6 mm x 6 ft • Wrench (9 x 11), (12 x 14) : 1 pc. each • Bar Wrench (K-236) : 1 pc.	

Product Code 7690 AUTOMATIC TOOL REPLACEMENT SPINDLE NR50-5100 ATC-RS 50,000 rpm

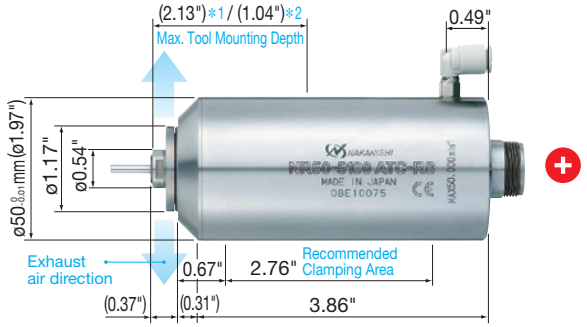

*1 : When the tool shank diameter is less than 1/8"
*2 : When the tool shank diameter is between 4.0mm and 1/4"

● Specially designed for easy tool replacement. The cutting tool can be exchanged automatically by supplying air to the spindle. This high-precision spindle utilizes high precision bearings.
Utilizes a sealed collet to prevent powder debris and residue from entering the spindle during dental, circuit board and other non-ferrous material machining.

- Allowable Motor Speed ····· 50,000 rpm
- Spindle Accuracy ····· Within 1 µm
- Air for Collet Opening ····· 80~87PSI
- Standard Size Collet (CHR-3.175 RS) ····· ø1/8"
- Weight ····· 3 lb. 0.33 oz.

< Optional >
- Collet (CHR-[][] RS) ····· ø3.0 mm, ø1/8", ø4.0, ø6.0 mm, ø1/4"
(See Page 6-p4 for details)

Automatic Tool Replacement Spindle

Product Code	Product Name	Standard Equipment · Accessories	
7690	NR50-5100 ATC-RS	• Collet ø1/8" (CHR-3.175 RS) • Air Hose with filter (K-251) : ø6 mm x 6 ft • Wrench (9 x 11), (12 x 14) : 1 pc. each • Bar Wrench (K-236) : 1 pc.	

Product Code 1582 AUTOMATIC TOOL REPLACEMENT SPINDLE NR40-5100 ATC 50,000 rpm

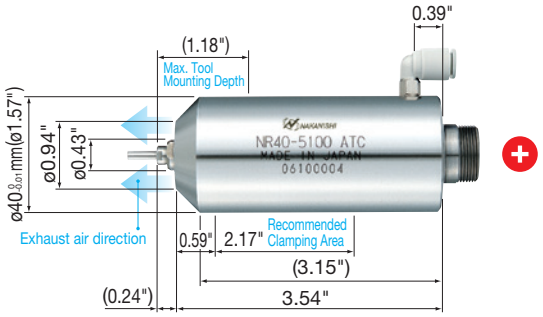

● Specially designed for easy tool replacement. The cutting tool can be exchanged automatically by supplying air to the spindle. This high-precision spindle utilizes high precision bearings.

- Allowable Motor Speed ····· 50,000 rpm
- Spindle Accuracy ····· Within 2 µm
- Air for Collet Opening ····· 80~87PSI
- Standard Size Collet (CHB-3.175) ····· ø1/8"
- Weight ····· 1 lb. 10.10 oz.

< Optional >
- Collet (CHB-[][]) ····· ø2.0, ø3.0 mm, ø1/8", ø4.0 mm
(See Page 6-p2 for details)

Automatic Tool Replacement Spindle

Product Code	Product Name	Standard Equipment · Accessories	
1582	NR40-5100 ATC	• Collet ø1/8" (CHB-3.175) • Air Hose with filter (K-251) : ø6 mm x 6 ft • Wrench (6.1 x 8), (9 x 11) : 1 pc. each • Bar Wrench (K-236) : 1 pc.	

*Do not exceed the allowable motor speed for the spindle.

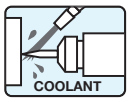

Product Code 1836 LEVER TYPE SPINDLE NRR-3060 60,000 rpm

No wrenches are required for tool changing.

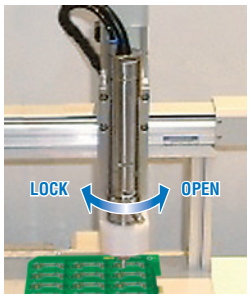

NRR-3060 Installed Example



- Allowable Motor Speed ····· 60,000 rpm
- Spindle Accuracy ····· Within 1 µm
- Standard Size Collet (CHB-3.175) ····· ø1/8"
- Weight ····· 12.35 oz.

< Optional >

- Collet (CHB-[][]) ····· ø2.0, ø3.0 mm, ø1/8", ø4.0 mm
  (See Page 6-p2 for details)

Lever Type Spindle

Product Code	Product Name	Standard Equipment · Accessories	
1836	NRR-3060	• Collet ø1/8" (CHB-3.175) • Wrench (6.1 x 8) : 2 pcs., (22 x 27): 1 pc.	

Features:

- New dust protection mechanism design exhausts air sideways. Side exhaust discharge keeps chips from being disbursed away from the machining area.
- The bottom of the spindle is equipped with an internal thread (M2 x 0.4mm / 3mm long). This enables tool length pre-setting.

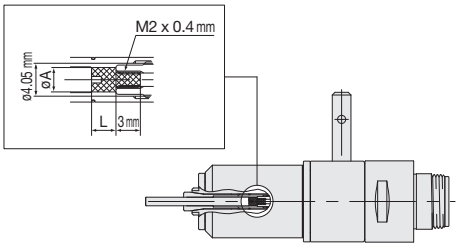

*Do not exceed the allowable motor speed for the spindle.

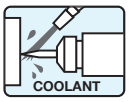

Product Code 9220 AIR QUICK CHANGE SPINDLE NR3060-AQC 60,000 rpm

Features:

- The collet holder can be replaced by using Air ON/OFF.
- The Spindle housing is made from precision ground, hardened, stainless steel (SUS).
- There are 2 models of collet holders. The collet holder model depends on the collet type selected.
  Various sizes of collets are available. (CHK 0.5mm-6.35mm, CHA 0.5mm-4.0mm)

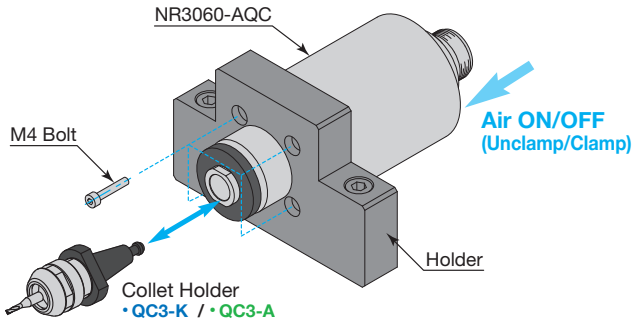

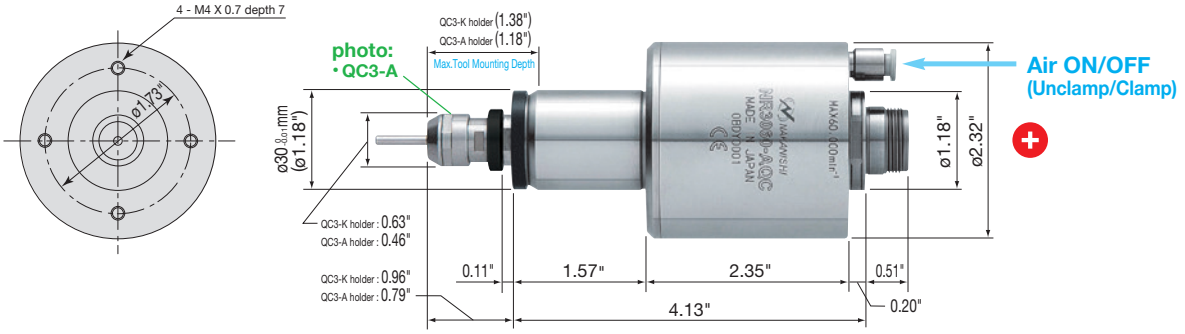

- Allowable Motor Speed ····· 60,000 rpm
- Spindle Accuracy ····· Within 1 µm
- Air for Collet Opening ····· 80~87PSI
- Weight ····· 2 lb. 11.39 oz.

< Optional >

- Collet Holder ····· **QC3-K**
- Collet (CHK-□□) ····· ø0.5 mm~ø6.35 mm
  (See Page 6-p3 for details)
- Collet Nut (K-265) ····· for Collet (CHK)
- Preset Adapter ····· QC3-ADP
- Wrench ····· 12 x 14 (2 pcs. not included)

< Optional >

- Collet Holder ····· **QC3-A**
- Collet (CHA-□□) ····· ø0.5 mm~ø4.0 mm
  (See Page 6-p2 for details)
- Collet Nut (CHN-A) ····· for Collet (CHA)
- Preset Adapter ····· QC3-ADP
- Wrench ····· 9 x 11, 8 x 5 (1 pc. each not included)

Air Quick Change Spindle

Product Code	Product Name	Standard Equipment · Accessories	
9220	NR3060-AQC	• Air Hose with filter (K-251) : ø6 mm x 6 ft • Wrench (22 x 27) : 1 pc.	

Note : **The collet holder with collet nut, collet and wrenches for collet holder are sold separately.**

COLLET HOLDER Taper Shank Tools and Collet Nut

Product	Product Code	Product Name	Collet	Std. Accessories	Attaches to	
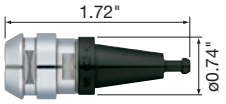	9210	• QC3-K	CHK	• Collet Nut (K-265) : 1 pc.	NR3060-AQC NRR3060-QC	
	9209	• QC3-A	CHA	• Collet Nut (CHN-A) : 1 pc.	NR3060-AQC NRR3060-QC	

*Do not exceed the allowable motor speed for the spindle.

COOLANT

Product Code 9208 LEVER TYPE QUICK CHANGE SPINDLE NRR3060-QC 60,000 rpm

Features:

- Quick, easy and accurate tool change without the need for wrenches.
- Makes tool pre-setting outside of the machine possible.
- There are 2 models of collet holders. The collet holder model depends on the collet type selected.
  Various sizes of collets are available. (CHK 0.5mm-6.35mm, CHA 0.5mm-4.0mm)
- 10 times the retention force as compared to the NRR-2651.

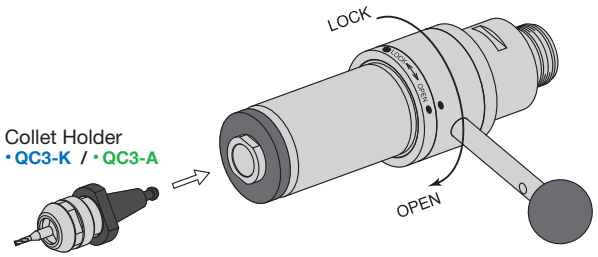

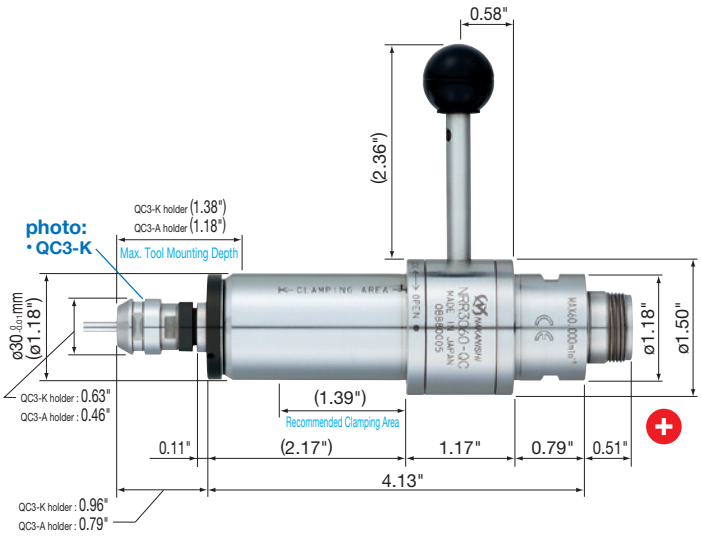

- Allowable Motor Speed ····· 60,000 rpm
- Spindle Accuracy ····· Within 1 µm
- Lever Operating Angle ····· 90°
- Weight ····· 1 lb. 4.11 oz.

< Optional >

- Collet Holder ····· **QC3-K**
- Collet (CHK-[][]) ····· ø0.5 mm~ø6.35 mm
  (See Page 6-p3 for details)
- Collet Nut (K-265) ····· for Collet (CHK)
- Preset Adapter ····· QC3-ADP
- Wrench ····· 12 x 14 (2 pcs. not included)

< Optional >

- Collet Holder ····· **QC3-A**
- Collet (CHA-[][]) ····· ø0.5 mm~ø4.0 mm
  (See Page 6-p2 for details)
- Collet Nut (CHN-A) ····· for Collet (CHA)
- Preset Adapter ····· QC3-ADP
- Wrench ····· 9 x 11, 8 x 5 (1 pc. each not included)

Lever Type Quick Change Spindle

Product Code	Product Name	Standard Equipment · Accessories	
9208	NRR3060-QC	• Wrench (22 x 27) : 1 pc.	

Note : The collet holder with collet nut, collet and wrenches for collet holder are sold separately.

*Do not exceed the allowable motor speed for the spindle.

PRESET ADAPTER

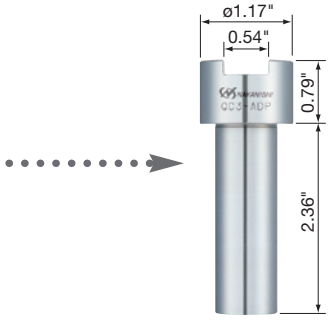

- Insert the tool holder into the Preset Adapter.
- Align the tool holder with the drive dog notches in the Preset Adapter.
- Attached the Collet Nut and Collet to the tool holder. Lightly finger tighten the Collet Nut.
- Insert the cutting tool into the Collet.
- Place the wrenches on the Collet Nut and Collet Holder and securely tighten in a clockwise direction.

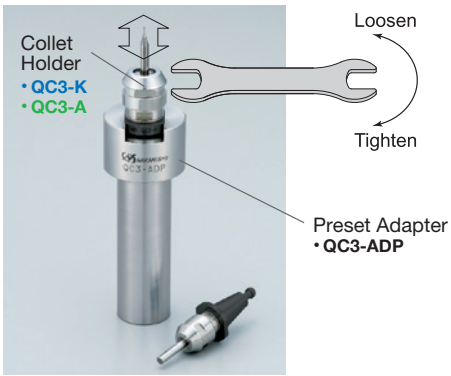

Preset Adapter

Product Code	Product Name	Standard Equipment · Accessories	
9211	QC3-ADP	——	

*Order by product code. 2–p65

Caution : Use the motor at motor speed less than maximum allowable speed or use the speed reducer. DO NOT exceed the allowable motor speed for the spindle and the reducer.

Product Code ASE1507 SPEED REDUCER 1/4 ARG-011E

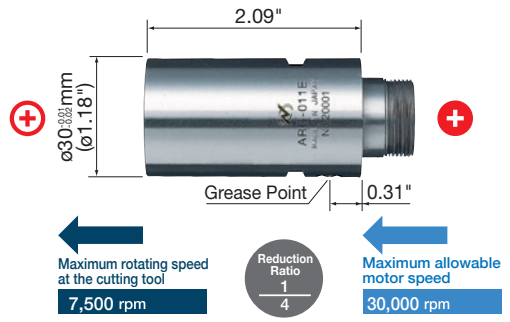

●•If the speed reducer is connected between the motor and the spindle, it reduces the rotating speed and increases the torque while keeping the motor speed unchanged.

Maximum allowable motor speed 30,000 rpm

Maximum rotating speed at the cutting tool <Reduction Ratio : 1/4> 7,500 rpm

- Speed Reducing Mechanism ····· By planetary gear system
- Speed Reduction Ratio ····· 1/4
- Weight ····· 8.54 oz.

Speed Reducer 1/4

Product Code	Product Name	Standard Equipment · Accessories	
ASE1507	ARG-011E	• Gear Grease (10mL) • Grease Nipple : 1 pc.	

To extend the life expectancy of the Speed Reducer, inject grease every 70 to 100 hours. Grease injection prevents friction of the internal gears as well as heat generation. Adding grease also prevents the degradation of the existing grease in the reducer. Please maintain a reducer grease maintenance program.

Product Code ASE1508 SPEED REDUCER 1/16 ARG-021E

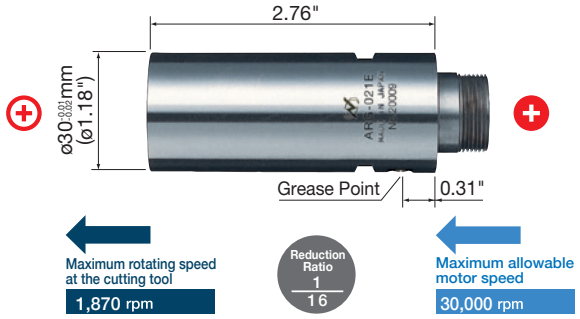

●If the speed reducer is connected between the motor and the spindle, it reduces the rotating speed and increases the torque while keeping the motor speed unchanged.

Maximum allowable motor speed 30,000 rpm

Maximum rotating speed at the cutting tool <Reduction Ratio : 1/16> 1,870 rpm

- Speed Reducing Mechanism ····· By planetary gear system
- Speed Reduction Ratio ····· 1/16
- Weight ····· 11.46 oz.

Speed Reducer 1/16

Product Code	Product Name	Standard Equipment · Accessories	
ASE1508	ARG-021E	• Gear Grease (10mL) • Grease Nipple : 1 pc.	

To extend the life expectancy of the Speed Reducer, inject grease every 70 to 100 hours. Grease injection prevents friction of the internal gears as well as heat generation. Adding grease also prevents the degradation of the existing grease in the reducer. Please maintain a reducer grease maintenance program.

25 Pin INTERFACE CABLE



●3 Meter long Interface Cable provides a DB25 Male Connector at one end and a blunt cut on the opposite end. Includes a pin-out wire diagram for easy interfacing of I/O signals from any NSK Control to a CNC Control.

25 Pin Interface Cable

Product Code	Product Name		
DB25M	DB25M	For NSK Control Connector A	

15 Pin INTERFACE CABLE



●3 Meter long Interface Cable provides a DB15 Male Connector at one end and a blunt cut on the opposite end. Includes a pin-out wire diagram for easy interfacing of the (OP1) "E-Stop Input Circuit" and "Safety Relay Circuit" from the NSK Control to a CNC Control.

15 Pin Interface Cable

Product Code	Product Name		
DB15M	DB15M	For NSK Control Connector B	

Product Code 4504 AIR LINE KIT AL-C1204

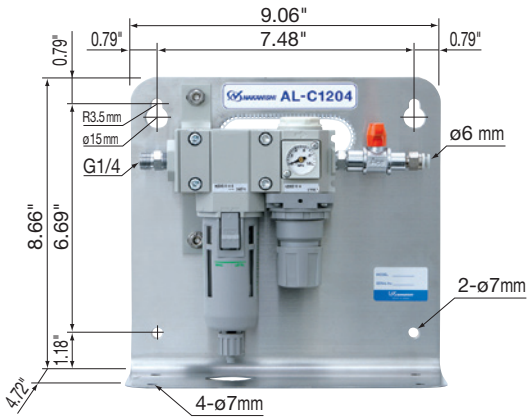

● The AL-C1204 Air Line Kit is designed to deliver clean, dry air to Electric Motors via the Controller. The filter removes small amounts of debris while the adjustable regulator provides the correct air pressure for cooling and purging.

Air Line Kit (For ø6 mm Hose · Filter Mesh 0.3 µm)

Product Code	Product Name	Standard Equipment · Accessories	
4504	AL-C1204	• Air Filter • Air Regulator • Air Pressure Gauge • Air ON-OFF Valve • Hose for Piping (K-275) : 6 ft	

Rotary Coupling

An electric/pneumatic coupling is now available that allows NAKANISHI Electric Spindles up to 30mm diameter, to be mounted to the turret of a CNC turning machine. The rotary coupling prevents power cable and pneumatic lines from getting tangled when the turret is rotated. Contact NSK America at 800-585-4675 for complete details.

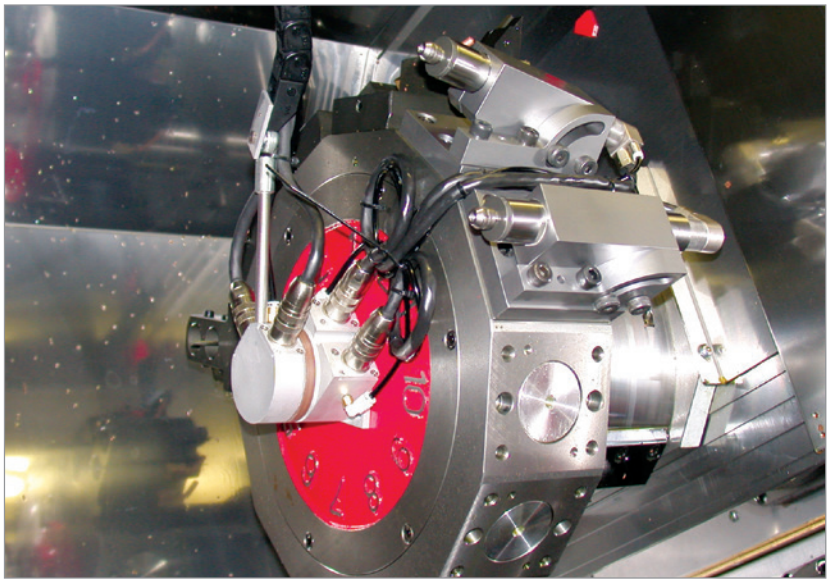

*Order by product code. 2–p67

- **Interchangeable with a variety of attachments depending on the application.**

1
EmaxEVO
ESPERT
ROTUS
IMPULSE
PRESTO II
Sheenus ZERO
2
iSpeed3
E2000 ø1.0"/ø0.98"/ø0.897"
E3000 – One Piece
E3000 – Modular
ø1.18"
ø1.0"/ø0.98" ø0.897"
E3000 – 80,000rpm
E4000
3
MA
ø0.897"
ø1.0" ø0.98"
ø1.18"
MS
ø0.75" ø0.79"
ø0.87" ø0.91"
ø1.0" ø0.98"
4
HES
iSpeed5
HTS
HPS
PLANET
Xpeed
ABT
5
AIR LINE KIT
6
PARTS
7
TECHNICAL DATA
8
APPLICATION EXAMPLES
INDEX

Modular Type ø1.0", ø0.98"(ø25.4, ø25 mm) System Chart

✻Take note that product names and specifications will be changed.

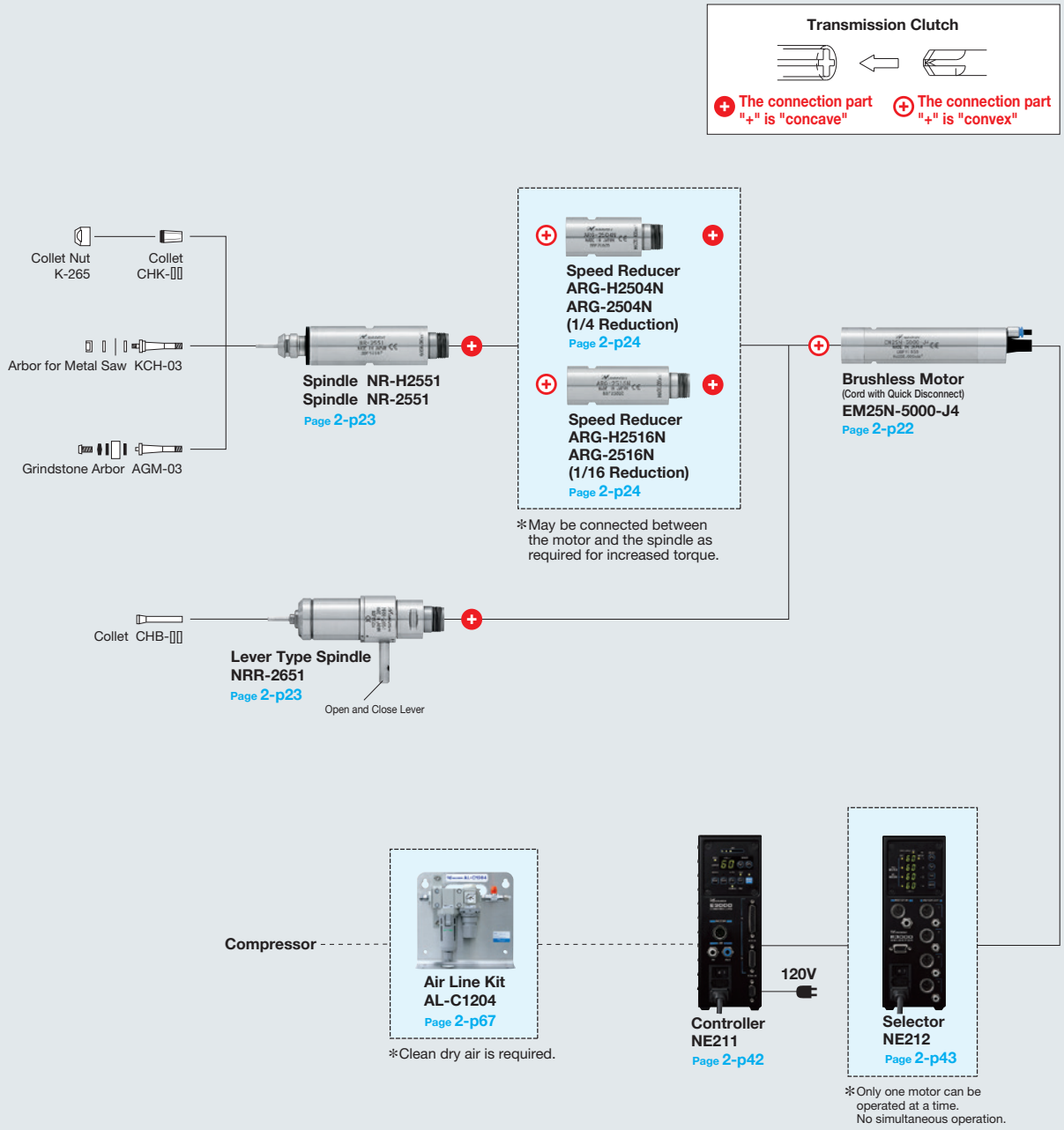

✻Do not exceed the maximum motor speed recommendation for the spindles.
Excess speed will dramatically reduce bearing life.

- **High-performance brushless motor which provides compact size, light weight, output (Max. 300W), and excellent durability (motor endurance to 5,000 hours of continuous use by NAKANISHI's internal standard load test). By the combination with high-performance spindles, it can be installed on a NC lathe, special purpose machine, robot, etc.**

Modular Type ø0.897"(ø22.8 mm) System Chart

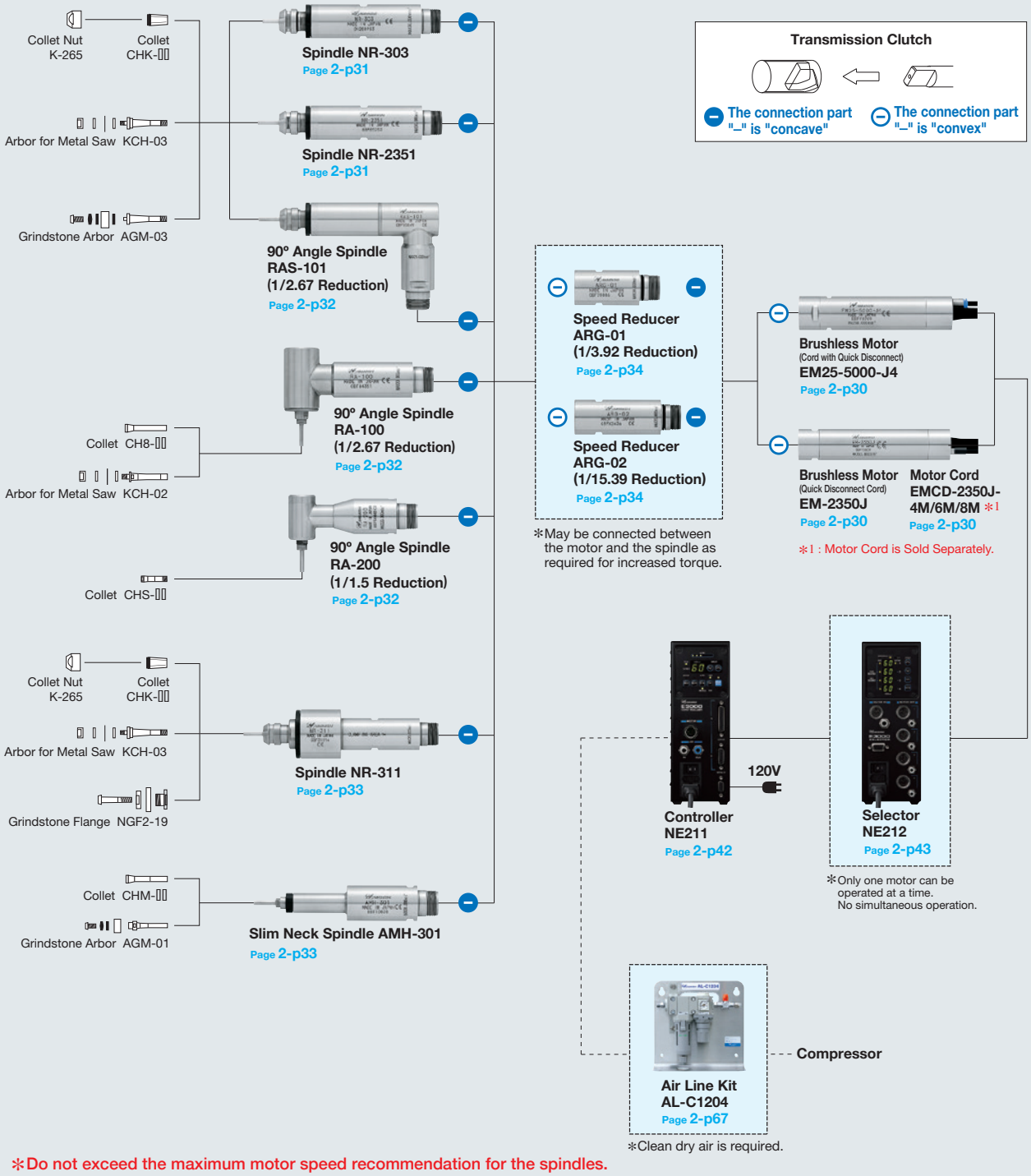

∗Do not exceed the maximum motor speed recommendation for the spindles. Excess speed will dramatically reduce bearing life.

- 1,000~80,000 rpm
- Maximum Output 350W
- Auto or Manual Control Modes.
- Can be installed on a Special-Purpose Machine, NC Lathe, Robot, etc.
- Motor speed is displayed accurately on the front panel.

1
EmaxEVO
ESPERT
ROTUS
IMPULSE
PRESTO II
Sheenus ZERO
2
iSpeed3
E2000 ø1.0"/ø0.98"/ø0.897"
E3000 – One Piece
E3000 – Modular
ø1.18"
ø1.0"/ø0.98" ø0.897"
E3000 – 80,000rpm
E4000
3
MA
ø0.897"
ø1.0" ø0.98"
ø1.18"
MS
ø0.75" ø0.79"
ø0.87" ø0.91"
ø1.0" ø0.98"
4
HES
iSpeed5
HTS
HPS
PLANET
Xpeed
ABT
5
AIR LINE KIT
6
PARTS
7
TECHNICAL DATA
8
APPLICATION EXAMPLES
INDEX

Modular Type ø1.18", ø1.97"(ø30, ø50 mm) System Chart

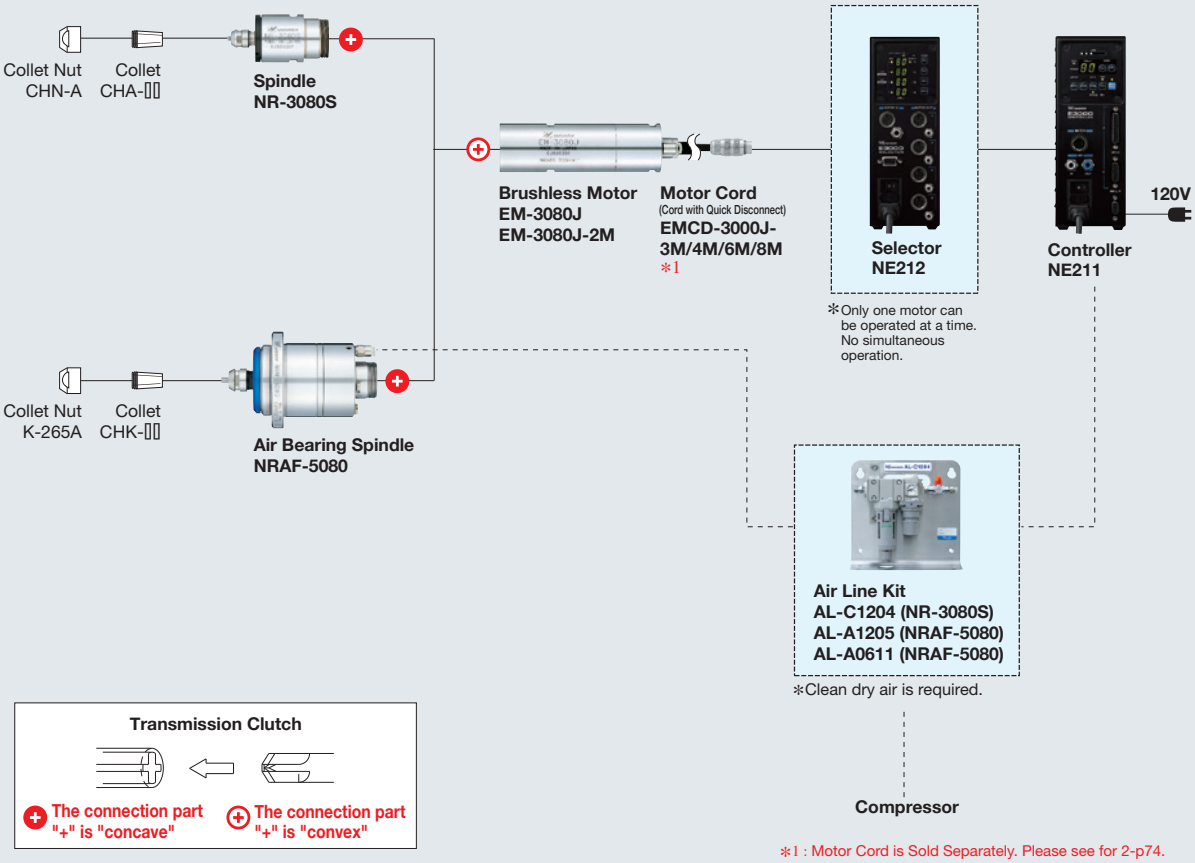

∗1 : Motor Cord is Sold Separately. Please see for 2-p74.

Features of E3000 Series



NR-3080S EM-3080J

Maximum Motor Speed 80,000 rpm

The maximum motor speed 80,0 rpm is realized by using high performance brushless motor and ceramic bearings.

Maximum Motor Output with 350W Power Supply

The E Series motor is a brushless DC motor utilizing hall elements, the rotor unit is a rare-earth magnet, motor develops 350W.

Motor Endurance

Brushless motor has no carbon brushes or commutator, minimizing wear and resulting in a long service life. Due to the brushless construction, electrical interference and other noises are minimized.

Smooth Rotation

'The absence of a commutator' and 'the use of a photo coupler sending a feedback signal of 48 pulses per revolution' result in very smooth rotation with little vibration throughout the speed range.

Excellent Durability by air-cooling system

Air-cooled motor uses a small volume of air (1.0CFM) to prevent heat buildup and allow long continuous operation.

Clean dry air is required to cool the motor and protect the spindle from contaminants. Use a filter, regulator and lubricator.
(Proper air pressure 29~73PSI) (Use Air Line Kit AL-C1204)

Spindle Accuracy

Spindle Accuracy is within 1 μm (TIR).

High Rigidity, Short Body

E3000 series uses a short body that is hardened and precision ground for excellent durability.

Motor Connector Attaches Directly to the Back of the Motor / Spindle.

Simple screw-lock connector makes changing motors extremely easy. Electric and Air feed incorporated into a single connector.

Power Source Auto Detection

Power Source is 100-240V for international operation. Eliminate the need of setting the voltage or changing fuses.

Protection System, External Input / Output Control Signal

Error function : Motor/Spindle is stopped safety, Error LED is lit.
ex.) Overload operation, Air shortage, Motor Spindle can be controlled and monitored by external input-output connector.
ex.) Control ; Start/Stop, FWD./REV., Motor Speed Control
Monitor ; Motor rotating, Torque Load.

Centering Mode Switch

This switch activates the centering mode, which maintains a constant 500 rpm spindle speed for centering the tool.

Automatic Control System Chart

Single Motor Spindle Operation

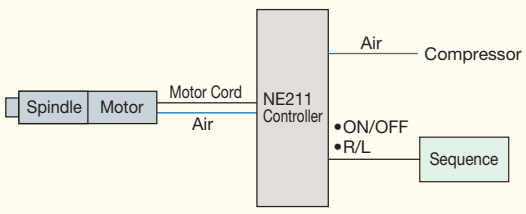

Sequential Operation of up to 4 Motor / Spindles

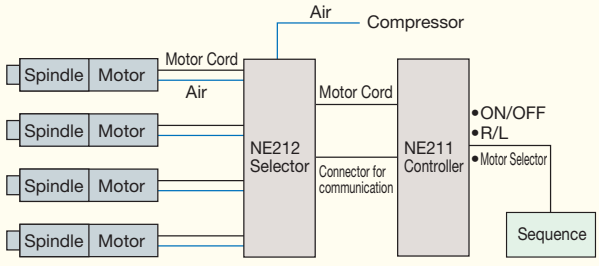

*When connecting NE211 to NE212, up to 4 motors can be connected to NE212 providing individual control of each motor.
(4 motors can not be run simultaneously.)

- AC100-240V for international operation
- 1,000~80,000 rpm ● Maximum Output 350W
- External Input / Output Control Signal (Refer to 7-p2~p9 page of this catalog)

Product Code 9775 CONTROLLER NE211 80,000 rpm

∗: Load Meter



● : Continuous load area
● : Intermittent load area
● : Overload

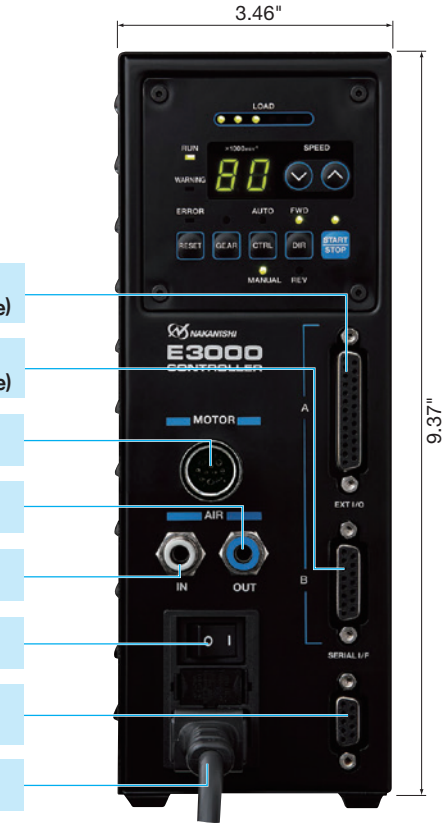

External Input-Output Connector A (D-SUB25 Female)

External Input-Output Connector B (D-SUB15 Female)

Motor Connector

Air Output Joint ø6 mm

Air Input Joint ø6 mm

Power Switch

Communication Connector for NE212

Intake with Power Fuse

[1] Load Meter*
[2] Running LED (RUN)
[3] Warning LED (WARNING)
[4] Error LED (ERROR)
[5] Error Reset Switch (RESET)
[6] Gear Setting Switch (GEAR)
[7] Control Switch (AUTO/MANUAL)
[8] Rotating Direction Selector Switch (FWD./REV.)
[9] Start Switch (START)
[10] Motor Speed Adjustment Switch (SPEED)
[11] Display

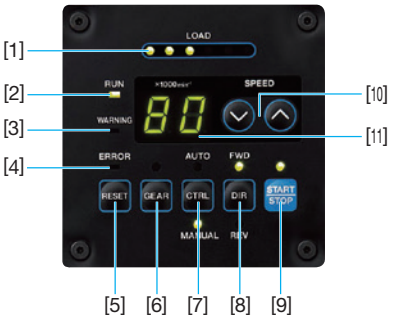

Specifications

Product Name	: NE211
Power Source	: AC120V
Motor Speed	: 1,000-80,000 rpm
Max. Output Power	: 350W
Power Consumption	: 1.8A
Air Flow Volume	: 1.0CFM (36-44PSI)
Weight	: 6 lb. 2.77 oz.
Dimensions	: W3.46" x D5.43" x H9.37"

E3000 Controller

Product Code	Plug Type	Product Name	Standard Equipment · Accessories	
9775	120V (B type)	NE211	• Power Cord : 6 ft • Air Hose with filter • Reducer • Connector Cap (Provided) • Bracket • Nylon Clip • Screw • Rubber Pad • Fuse (T6.3AL) 250V: 2 pcs.	

*Please refer to Technical Data 7-p2~p9 in detail about External Input-Output Connector.
*AC100-240V for international operation. Please check the power source plug type (2-p73) and order accordingly.

● Mounting Bracket

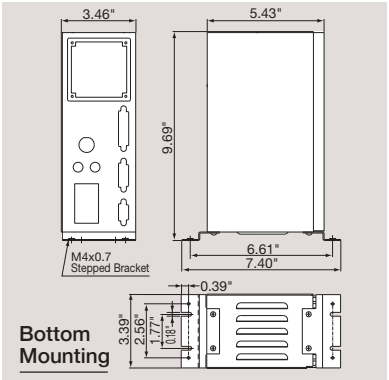

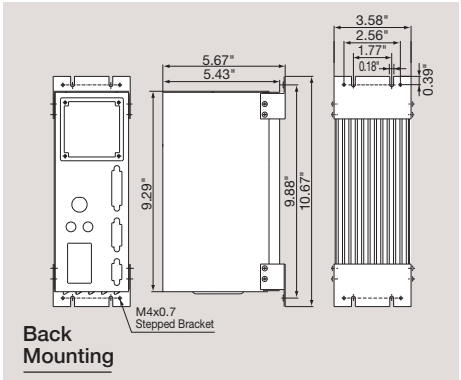

Optional



Control Panel Extension Cord

Product Code	Product Name	Fit to	
8407	E3000-PEX4	NE211	

25 / 15 Pin Interface Cable

Product Code	Product Name	Fit to	
DB25M	DB25M	NE211	
DB15M	DB15M	NE211	

- AC100-240V for international operation
- Up to 4 motors can be connected to NE212 providing individual control of each motor. (Simultaneous motor operation is not possible)

Product Code 9781 SELECTOR NE212 80,000 rpm

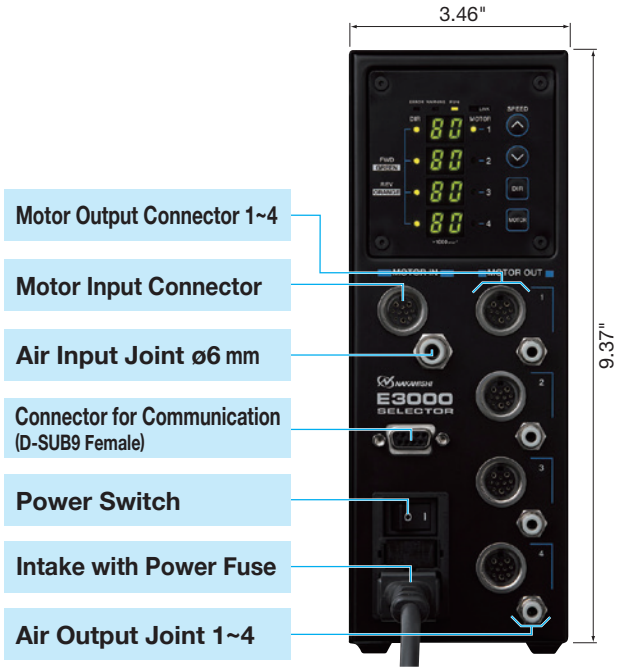

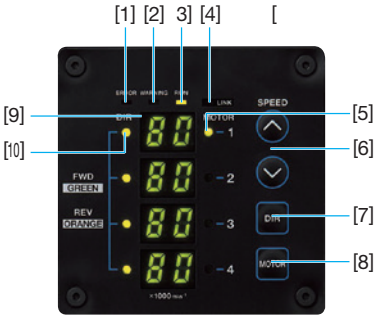

[1] Error LED (ERROR)
[2] Warning LED (WARNING)
[3] Running LED (RUN)
[4] Link LED (LINK)
[5] Motor Select LED
[6] Motor Speed Adjustment Switch (SPEED)
[7] Rotating Direction Selector Switch (FWD./REV.)
[8] Motor Selector Switch (MOTOR SEL)
[9] Display
[10] FWD./REV. LED (FWD. / REV.)

Specifications

Product Name	: NE212
Power Source	: AC120V
Power Consumption	: 0.15A
Air Flow Volume	: Max. 4.0CFM (51PSI / Using max. 4 motor/spindles)
Weight	: 4 lb. 3.02 oz.
Dimensions	: W3.46" x D5.43" x H9.37"

● Mounting Bracket

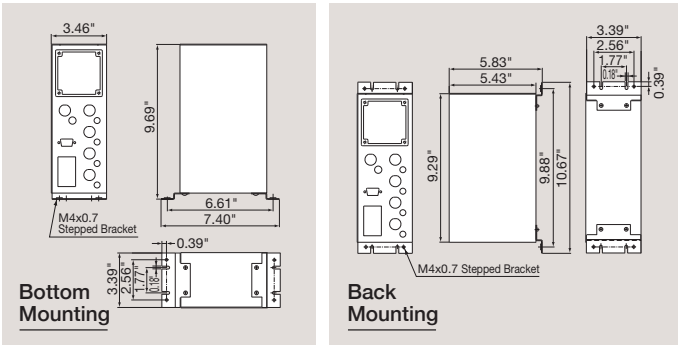

E3000 Selector

Product Code	Plug Type	Product Name	Standard Equipment · Accessories	
9781	120V (B type)	NE212	• Power Cord : 6 ft • Connect NE211 to NE212 Cable : 23.62" • Communication Cable : 23.62" • Connector Cap (Provided) • Plug to avoid Air Flow • Bracket • Nylon Clip • Screw • Rubber Pad • Fuse (T1.6AL) 250V: 2 pcs.	

*Power Source for Global Operation (AC100-240V). Please check the power source plug type and order accordingly.

● Power Source Plug

Plug Type	Main Usable Area	Product
For 120V (B type)	For U.S.A. and Canada	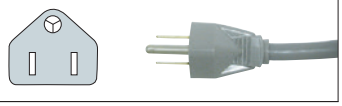

*Order by product code. 2–p73

Caution : Brushless Motor with 6.5 ft (2 m) long quick disconnect cord can not used with EMCD-3000J-8M.

BRUSHLESS MOTOR EM-3080J — 80,000 rpm

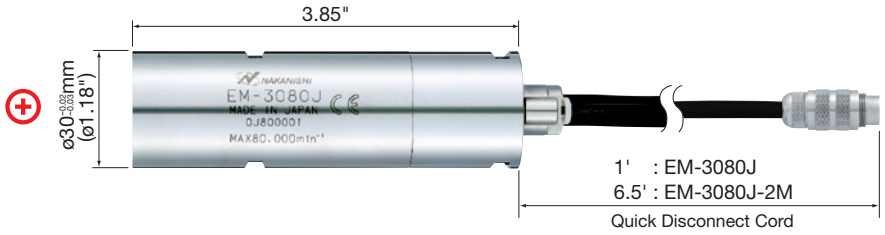

Note : Motor Cord is sold separately. Please select a cord from the list below.

EMCD-3000-4M / 6M / 8M and EMCD-3000A-4M / 6M / 8M on page 2-p54 can not used for this motor.

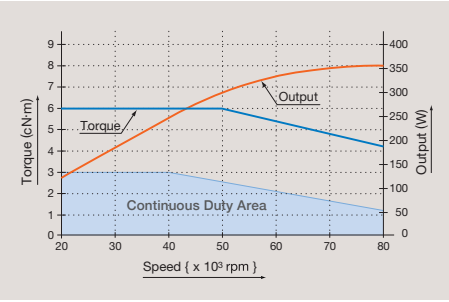

- Motor Speed ····· 20,000~80,000 rpm
- Max. Output Power ····· 350W
- Housing ····· Stainless steel (SUS416)
- Weight ····· 12.70 oz. (w/o Cord)

Brushless Motor with 1 ft Cord

Product Code	Product Name	Standard Equipment · Accessories	
1781	EM-3080J	• Wrench (22 x 27) : 1 pc.	

Brushless Motor with 6.5 ft Cord

Product Code	Product Name	Standard Equipment · Accessories	
1788	EM-3080J-2M	• Wrench (22 x 27) : 1 pc.	

*EMCD-3000J-8M (25.3 ft / 8m long) can not be used for this motor.

MOTOR CORD

Product	Product Code	Description · Product Name	Length	Std. Accessories	Fit to	
	1778	Motor Cord 3M EMCD-3000J-3M	10 ft (3.0m)	• Air Hose • Connector Cap (Provided)	EM-3080J EM-3080J-2M	
	1768	Motor Cord 4M EMCD-3000J-4M	12.1 ft (3.7m)			
	1767	Motor Cord 6M EMCD-3000J-6M	18.7 ft (5.7m)			
	1766	Motor Cord 8M EMCD-3000J-8M	25.3 ft (7.7m)		EM-3080J	

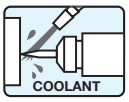

E3000 Series can be used in conjunction with water or oil based coolants.

Product Code 7588 SPINDLE NR-3080S (Ceramic Bearing) 80,000 rpm

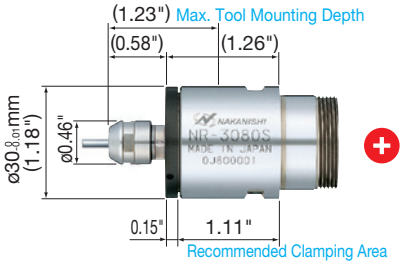

●This spindle can be used for small-diameter milling, drilling, slitting, chamfering, grinding, etc.

- Allowable Motor Speed ····· 80,000 rpm
- Spindle Accuracy ····· Within 1 µm
- Standard Size Collet (CHA-3.175) ····· ø1/8"
- Weight ····· 6.00 oz.

< Optional >

- Collet (CHA-[][]) ····· ø0.5 mm~ø4.0 mm

(See Page 6-p2 for details)

Spindle

Product Code	Product Name	Standard Equipment · Accessories	
7588	NR-3080S	• Collet ø1/8" (CHA-3.175) • Collet Nut (CHN-A) : 1 pc. • Wrench (8 x 5), (9 x 11), (22 x 27) : 1 pc. each	

Product Code 1793 AIR BEARING SPINDLE NRAF-5080 80,000 rpm

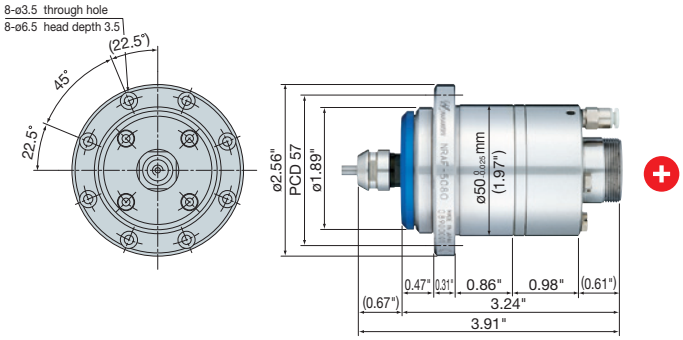

●This air bearing type spindle incorporates an air pressure bearing that floats the spindle resulting in almost no vibration and extremely high accuracy for extremely high precision machining.
*Air line kit AL-A1205 and AL-A0611 are recommendable as air supply system.

- Allowable Motor Speed ····· 80,000 rpm
- Spindle Accuracy ····· Within 1 µm
- Standard Size Collet (CHK-3.175) ····· ø1/8"
- Air Bearing Consumption ····· 1.24CFM (73PSI)
- Weight ····· 1 lb. 3.75 oz.
- Main body mount method ····· Flange mounting method, M3 bolt (8 locations, 45° Angle, PDC57)
- Bearing Type ····· Air static bearing
- Bearing Load Capacity ····· Radial : 20N, Thrust : 40N
- Useable Max. Diameter of Grindstone ····· Less than ø8mm (For ø6.0mm shank)
- Hose Diameter (Air Intake · Bearing) ····· ø4.0mm

< Optional >

- Collet (CHK-[][]) ····· ø0.5 mm~ø6.35 mm

(See Page 6-p3 for details)

Air Bearing Spindle

Product Code	Product Name	Standard Equipment · Accessories	
1793	NRAF-5080	• Collet ø1/8" (CHK-3.175) • Collet Nut (K-265A) : 1 pc. • Wrench (12 x 14) : 2 pcs., (22 x 27) : 1 pc. • Fitting (KQ2H04-M5-X2) : 1pc. • Plug (KQ2P-04) : 1pc. • Intake Air Hose : ø4mm x 13ft, 1pc. • Bar Wrench (K-236) : 1pc.	

*Do not exceed the allowable motor speed for the spindle.

Product Code 4504 AIR LINE KIT AL-C1204

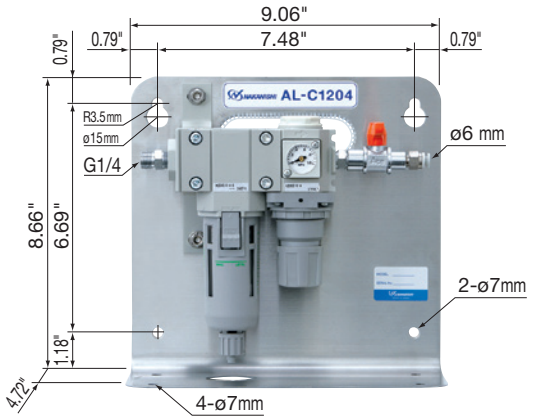

- The AL-C1204 Air Line Kit is designed to deliver clean, dry air to Electric Motors via the Controller. The filter removes small amounts of debris while the adjustable regulator provides the correct air pressure for cooling and purging.

Air Line Kit (For ø6 mm Hose · Filter Mesh 0.3 µm)

Product Code	Product Name	Standard Equipment · Accessories	
4504	AL-C1204	• Air Filter • Air Regulator • Air Pressure Gauge • Air ON-OFF Valve • Hose for Piping (K-275) : 6 ft	

Product Code 4505 AIR LINE KIT AL-A1205 (For Air Bearing Spindles)

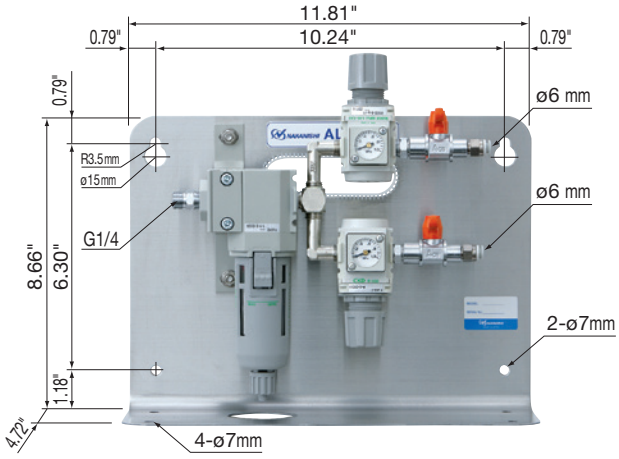

- The AL-A1205 is a dual output dry air, Air Line Kit designed for use on Electric Motor Systems that use the NRAF-5080 Air Bearing Spindle and the NE211 (E3000) Controller. One output is for the Electric Motor cooling, and the second output is for the Air Bearing operation. This unit is also designed for use on Air Turbine / Air Bearing Motor/Spindles such as the Xpeeds series and the ABT Series. One air output drives the Air Turbine Motor. The other air output drives the Air Bearing Spindle.
- Always supply air to the Air Bearing before starting the EM-3080 Motor. When stopping the spindle, always stop the motor before removing the air from the Air Bearing Spindle.
- Always supply air to the Air Bearing Spindle before starting the Air Turbine Motor. When stopping the spindle, always stop the Air Turbine Motor before removing the air from the Air Bearing Spindle.

Air Line Kit (For ø6 mm Hose · Filter Mesh 0.3 µm)

Product Code	Product Name	Standard Equipment · Accessories	
4505	AL-A1205	• Air Filter • Air Regulator • Air Pressure Gauge • Air ON-OFF Valve • Hose for Piping (K-275) : 6 ft	

Product Code 1548 AIR LINE KIT AL-A0611 (For Air Bearing Spindles)

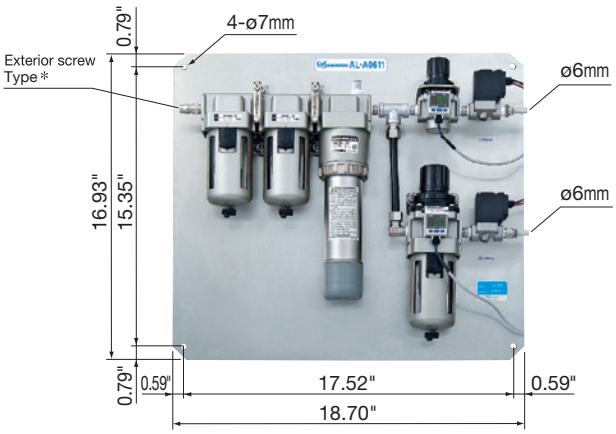

- The AL-A0611 is a high filtered Air Line Kit utilizing a *0.01µm micro mist filter system for NRAF-5080 Air Bearing Spindles combined with the NE211 (E3000) Controller.
- This Air Line Kit is highly recommended for use on all Xpeed Series and the ABT series (Air Turbine / Air Bearing motor/spindles).

*Exterior screw Type (Model KK13P-02M by SMC Corporation)

Air Line Kit (For ø6 mm Hose · Filter Mesh 0.01 µm)

Product Code	Product Name	Standard Equipment · Accessories	
1548	AL-A0611	• Mist Separator • Micro Mist Separator • Membrane Air Dryer • Regulator • Solenoid Valve • Digital Pressure Switch	

***Order by product code.**

Outside Diameter **ø1.57"(ø40 mm)**

1,000~40,000 rpm
Max. Output 1,200W

- Up to ø0.375" Collet Capacity
- Designed for use on CNC Lathes, Robots and Special Application Machines for precision milling, drilling grinding, slitting and deburring applications.

One Piece Type / Modular Type



1
EmaxEVO
ESPERT
ROTUS
IMPULSE
PRESTO II
Sheenus ZERO
2
iSpeed3
E2000 ø1.0"/ø0.98"/ø0.897"
E3000 – One Piece
E3000 – Modular ø1.18"
ø1.0"/ø0.98" ø0.897"
E3000 – 80,000rpm
E4000
3
MA
ø0.897"
ø1.0" ø0.98"
ø1.18"
MS
ø0.75" ø0.79"
ø0.87" ø0.91"
ø1.0" ø0.98"
4
HES
iSpeed5
HTS
HPS
PLANET
Xpeed
ABT
5
AIR LINE KIT
6
PARTS
7
TECHNICAL DATA
8
APPLICATION EXAMPLES
INDEX

- High Speed, Power and Torque in a Brushless DC Motor/Spindle
- 1,000 ~ 40,000 rpm with 1,200 Watts (1.6 HP) of Power
- 40 mm (1.57 Dia.) Body Diameter
- .375" Collet Capacity

1
EmaxEVO
ESPERT
ROTUS
IMPULSE
PRESTO II
Sheenus ZERO
2
iSpeed3
E2000 ø1.0"/ø0.98"/ø0.897"
E3000 – One Piece
E3000 – Modular
ø1.18"
ø1.0"/ø0.98" ø0.897"
E3000 – 80,000rpm
E4000
3
MA
ø0.897"
ø1.0" ø0.98"
ø1.18"
MS
ø0.75" ø0.79"
ø0.87" ø0.91"
ø1.0" ø0.98"
4
HES
iSpeed5
HTS
HPS
PLANET
Xpeed
ABT
5
AIR LINE KIT
6
PARTS
7
TECHNICAL DATA
8
APPLICATION EXAMPLES
INDEX

One Piece Type System Chart

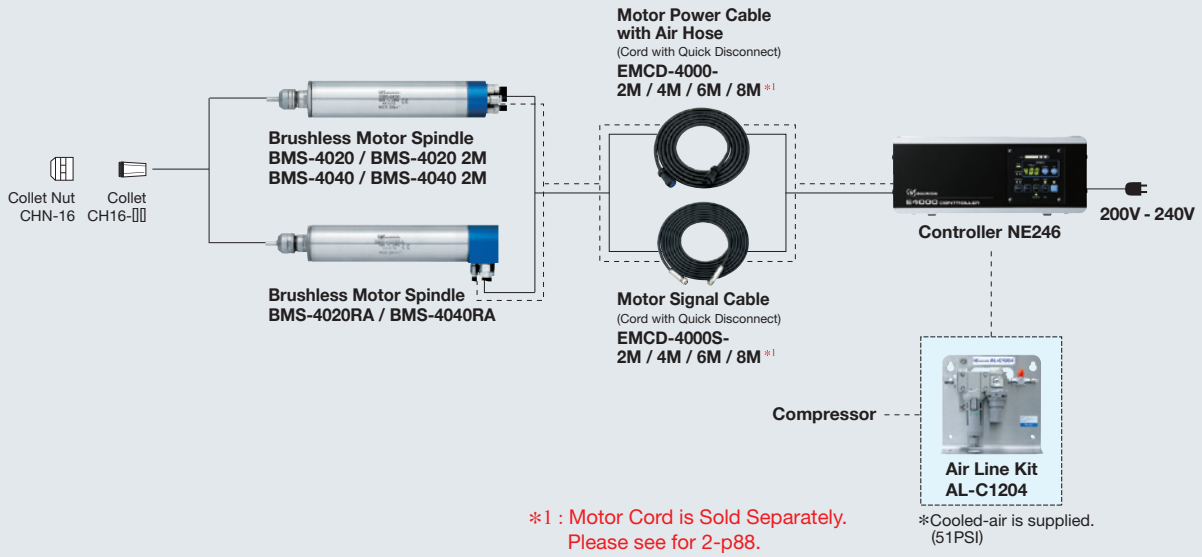

*1 : Motor Cord is Sold Separately.
Please see for 2-p88.

*Cooled-air is supplied.
(51PSI)

Modular Type System Chart

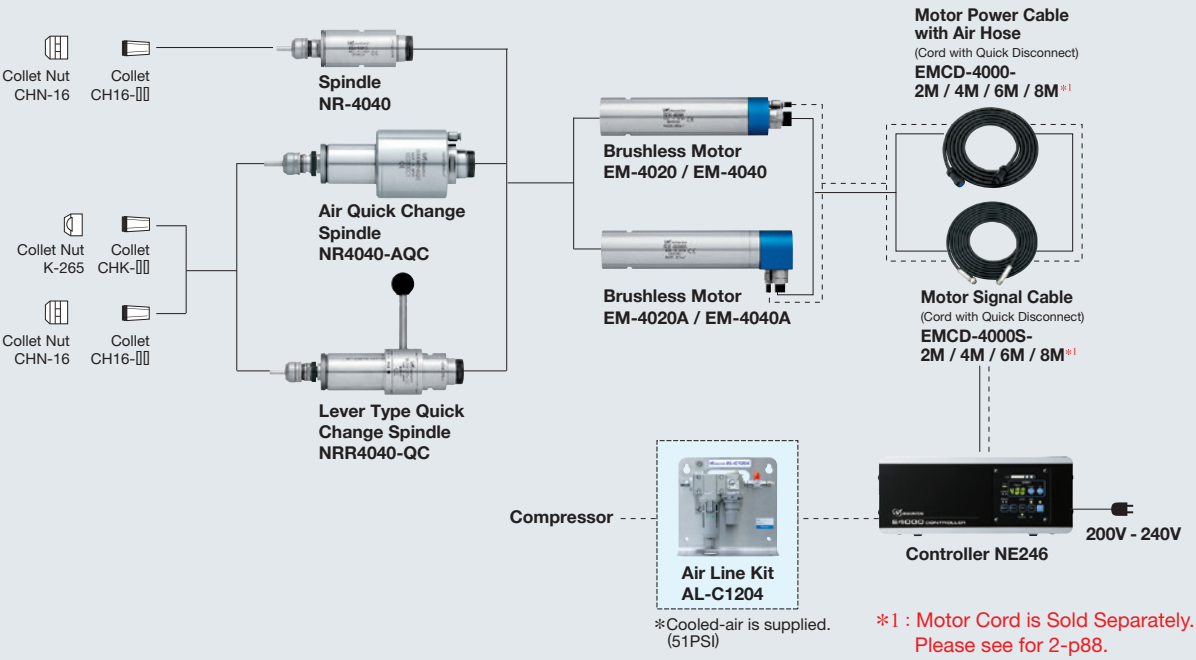

*Cooled-air is supplied.
(51PSI)

*1 : Motor Cord is Sold Separately.
Please see for 2-p88.

Features of E4000 Series

- 1,000~40,000 rpm, 500 rpm (for centering rotation)
- Rated output 400W (Max. output 1,200W) ● Spindle accuracy 1 μm or less.
- Achieved continuous run of over 5,000 hours.
  {NAKANISHI's factory test without load at 40,000 min-1(rpm)}
- Motor weight : 3 lb. 4.91 oz. (BMS-4020 / 4020 2M / 4040 / 4040 2M), 2 lb. 13.86 oz. (EM-4020 / 4040), 4 lb. 6.55 oz. (BMS-4020RA / 4040RA), 3 lb. 15.49 oz. (EM-4020A / 4040A)
- Proper cooling air pressure 51PSI ● Cooling air consumption 3.53CFM
- Extremely low vibration brushless DC motor.
- Utilizes a double pair of ultra-precision ceramic bearings to obtain high rigidity in both radial and thrust directions. Incorporates 2 ceramic bearings on the front side and 2 on the rear side.
- External housing made of precision ground stainless steel SUS-416.

■Automatic Control System Chart

Single Motor Spindle Operation

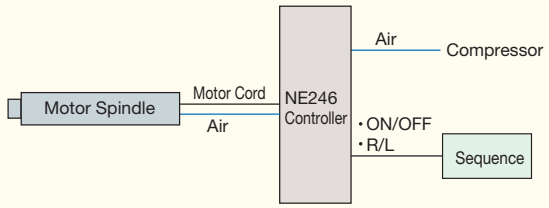

- Torque Characteristics

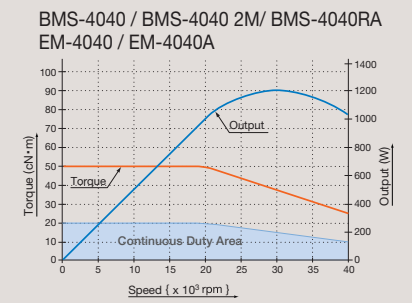

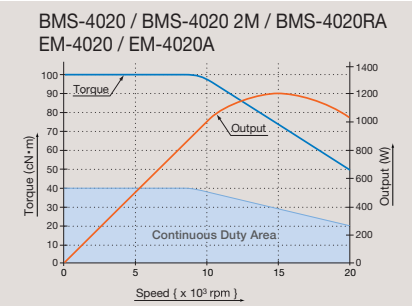

One Piece Type Combination Example 40,000 rpm



E4000, BMS-4040 Combination Example

Product Code	Product Name	Product	
8472	NE246	Controller	
1791	BMS-4040	Motor Spindle	
9253	EMCD-4000-2M	Motor Power Cable	
9257	EMCD-4000S-2M	Motor Signal Cable	
4504	AL-C1204	Air Line Kit	

Modular Type Combination Example 40,000 rpm



E4000, EM-4040, NR-4040 Combination Example

Product Code	Product Name	Product	
8472	NE246	Controller	
8346	EM-4040	Motor	
9213	NR-4040	Spindle	
9253	EMCD-4000-2M	Motor Power Cable	
9257	EMCD-4000S-2M	Motor Signal Cable	
4504	AL-C1204	Air Line Kit	

*Order by product code. 2–p79

Product Code 8472 CONTROLLER NE246 40,000 rpm

- **High-Performance Electric Circuit**
  'High grade feedback loop to maintain constant spindle speed even if load is varied', and 'Gentle start/Quick stop functions' are provided.
- **Warning/Error Function**
  Motor Spindle is stopped safely and quickly, Warning/Error LED is lit, Warning/Error Signal is output to external device when a problem or tool breakage is detected.
  Warning : • Air shortage • Overload operation
  • Motor Sensor Error • Controller Overheat
  Error : • Internal Circuit Error • Voltage/Currency Error
  • Overheat/Overload operation • Operation Error
  • Air shortage
- **Maximum RPM Setting by Parameter**
  Capable of setting a maximum allowable motor speed by Parameter Setting
- **External Input-Output Connector**
  (Refer to Technical Data 7-p18~p23 in detail)
  • **Input Signal Examples :**
  Start / Stop, Forward / Reverse, Pulse Speed Increase / Decrease, Speed Control, Error Code Release.
  • **Output Signal Examples :**
  Error / Warning, At-Speed, RPM Monitoring, Torque Monitoring, Rotating Signal.
- **Motor Speed Display**
  Motor speed is displayed precisely and digitally.
- **Operation Panel Extension Cord 4 meter (13 ft.) is available**



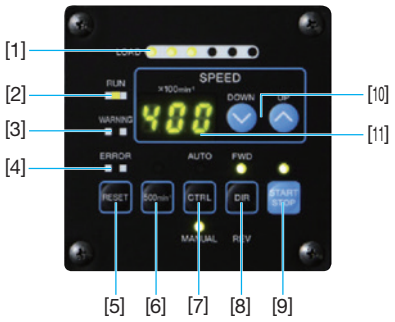

[1] Load Meter
[2] Running LED (RUN)
[3] Warning LED (WARNING)
[4] Error LED (ERROR)
[5] Error Reset Switch (RESET)
[6] Centering Mode
[7] Control Switch (AUTO/MANUAL)
[8] Rotating Direction Selector Switch (FWD./REV.)
[9] Start Switch (START)
[10] Motor Speed Adjustment Switch (SPEED)
[11] Display



● : Continuous load area
● : Intermittent load area
● : Overload

- **E4000 Optional Safety Relay Box**
  The Safety Relay Box is for use with the E4000 Controller. The Safety Relay "A" contacts switch the Motor Power Line and "B" contacts switch the external outputs to the machining center's CNC controller.

  • The Safety Relay utilizes Normally Open contacts. The Emergency Stop Signal lines must be supplied with power to hold the Safety Relay contacts closed and allow the E4000 Controller to supply power to the motor. Any system errors, trouble with the machining center or the connections between the E4000 Controller and the machining center's controller will cause the relay contacts to open and the E4000 motor to stop.
  • The Emergency Stop Signal Input can be connected to any and all portions of the machine's safety systems (E-Stop String) to stop the E4000 motor any time that stoppage of the spindle and motor is required.
  • The "B" contact outputs can be used to detect an open circuit on the motor line and integrated with the machines safety systems to stop the machine in case a problem occurs.

Specifications

Product Name	: NE246
Power Source	: AC 200-240V
Motor Speed	: 1,000-40,000 rpm
Max. Output Power	: 1,200 W
Power Consumption	: 3.2 A
Air Flow Volume	: 3.53 CFM (29~51PSI)
Weight	: 14 lb. 12.34 oz.
Dimensions	: W9.84" x D11.42" x H3.94"

E4000 Controller

Product Code	Plug Type	Product Name	Standard Equipment · Accessories	
8472	200 - 240V (Without Plug) 	NE246	• Power Cord : 13 ft • Air Hose with filter : 6 ft • Connector Cap (Provided) • Connector Cover (Provided) • Bracket : 4 pcs. • Rubber Pad : 4 pcs.	

*Please refer to Technical Data 7-p18~p23 in detail about External Input-Output Connector.

Interface Cable
Page 2-p89


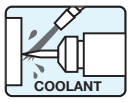

E4000 Series can be used in conjunction with water or oil based coolants.

BRUSHLESS MOTOR SPINDLE BMS SERIES 20,000 · 40,000 rpm

● **STRAIGHT TYPE**

BMS-4020 / BMS-4020 2M
BMS-4040 / BMS-4040 2M



● **90° ANGLE TYPE (RA)**

BMS-4020RA
BMS-4040RA

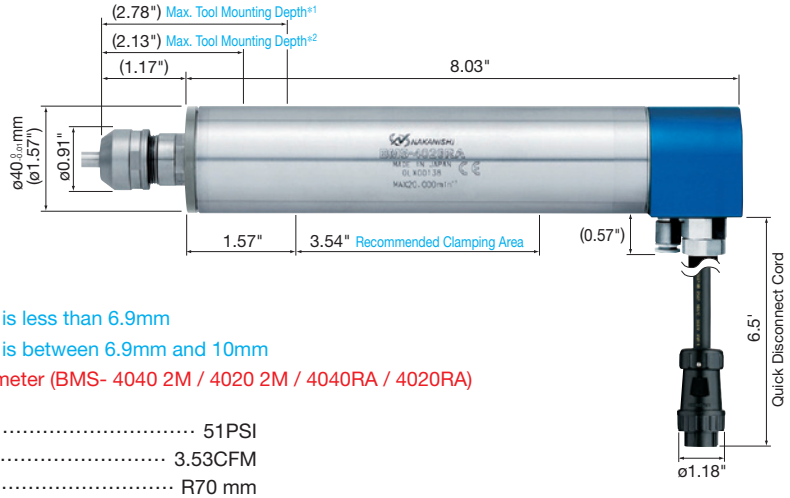

*1 : When the tool shank diameter is less than 6.9mm
*2 : When the tool shank diameter is between 6.9mm and 10mm
*3 : Max. Motor Cable length is 6 meter (BMS- 4040 2M / 4020 2M / 4040RA / 4020RA)

- Proper Air Pressure ····· 51PSI
- Air Consumption ····· 3.53CFM
- Min. Bending Cord Radius ····· R70 mm

< Optional >

- Collet (CH16-[][]) ····· ø3.0 mm~ø10.0 mm (See Page 6-p5 for details)
- Motor Power Cable*3 ····· ø1.18"
- Motor Signal Cable*3 ····· ø0.63"
- Air Hose ····· ø6mm

Note : Motor Cable is sold separately.

20,000 rpm

Product Code	Product Name	Shape	Max. Torque	Spindle Accuracy	Max. Output	Rated Output	Weight *	Cord Length	
1789	BMS-4020	Straight	1.0 N · m	Within 1 µm	1,200W	400W	3 lb 4.91 oz.	1 ft	
7683	BMS-4020 2M	Straight					3 lb 4.91 oz.	6.5 ft	
1790	BMS-4020RA	90° Angle					4 lb 6.55 oz.	6.5 ft	

* w/o Motor Cable

40,000 rpm

Product Code	Product Name	Shape	Max. Torque	Spindle Accuracy	Max. Output	Rated Output	Weight *	Cord Length	
1791	BMS-4040	Straight	0.5 N · m	Within 1 µm	1,200W	400W	3 lb 4.91 oz.	1 ft	
7685	BMS-4040 2M	Straight					3 lb 4.91 oz.	6.5 ft	
1792	BMS-4040RA	90° Angle					4 lb 6.55 oz.	6.5 ft	

* w/o Motor Cable

Standard Equipment · Accessories
• Collet ø1/4" (CH16-6.35) : 1 pc. • Collet Nut (CHN-16) • Wrench (17 x 22) : 2 pcs.

BRUSHLESS MOTOR

20,000 · 40,000 rpm

● STRAIGHT TYPE

EM-4020
EM-4040

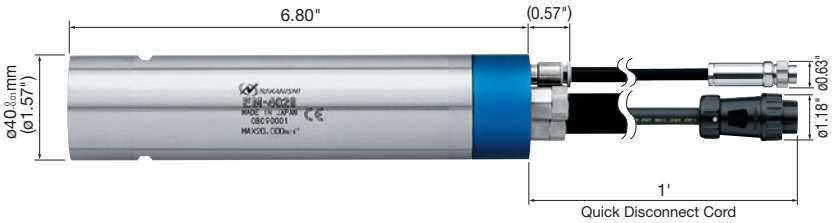

● 90˚ ANGLE TYPE (A)

EM-4020A
EM-4040A

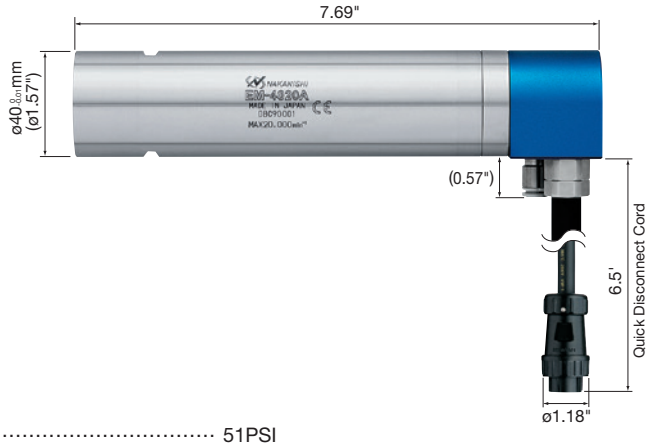

- Proper Air Pressure ····· 51PSI
- Air Consumption ····· 3.53CFM
- Min. Bending Cord Radius ····· R70 mm

< Optional >

- Motor Power Cable*3 ····· ø1.18"
- Motor Signal Cable*3 ····· ø0.63"
- Air Hose ····· ø6mm

*3 : Max. Motor Cable length is 6 meter (90˚ ANGLE TYPE)

Note : Motor Cable is sold separately.

20,000 rpm

Product Code	Product Name	Shape	Max. Torque	Max. Output	Rated Output	Weight *	Cord Length	
8348	EM-4020	Straight	1.0 N · m	1,200W	400W	2 lb 13.86 oz.	1 ft	
8349	EM-4020A	90˚ Angle				3 lb 15.49 oz.	6.5 ft	

* w/o Motor Cable

40,000 rpm

Product Code	Product Name	Shape	Max. Torque	Max. Output	Rated Output	Weight *	Cord Length	Price
8346	EM-4040	Straight	0.5 N · m	1,200W	400W	2 lb 13.86 oz.	1 ft	
8347	EM-4040A	90˚ Angle				3 lb 15.49 oz.	6.5 ft	

* w/o Motor Cable

Standard Equipment · Accessories
• Wrench (36) : 1 pc.

COOLANT

Product Code 9213 SPINDLE NR-4040 40,000 rpm

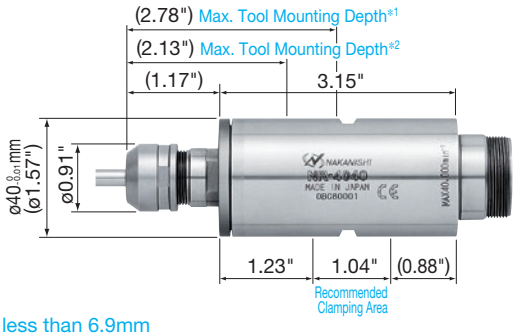

*1 : When the tool shank diameter is less than 6.9mm

*2 : When the tool shank diameter is between 6.9mm and 10mm

- Allowable Motor Speed ····· 40,000 rpm
- Spindle Accuracy ····· Within 1 µm
- Standard Size Collet (CH16-6.35) ····· ø1/4"
- Weight ····· 1 lb. 8.69 oz.

< Optional >

- Collet (CH16-[][]) ····· ø3.0 mm~ø10.0 mm (See Page 6-p3 for details)
- Collet Nut (CHN-16) ····· For Collet (CH16)

●This spindle can be used for small-diameter milling, drilling, slitting, chamfering, grinding, etc.

Spindle

Product Code	Product Name	Standard Equipment · Accessories	
9213	NR-4040	• Collet ø1/4" (CH16-6.35) • Collet Nut (CHN-16) : 1 pc. • Wrench (17 x 22) : 2 pcs., (36) : 1 pc.	

*Do not exceed the allowable motor speed for the spindle.

*Order by product code. 2–p83

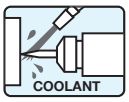

MOTOR SPINDLE BMS-4040-MQL 40,000 rpm



CENTER THROUGH COOLANT SPINDLE

- Pressurized coolant entered through the back of the spindle and through the cutting tool at a speed of 40,000 RPM.
- Through coolant improves chip clearance, accuracy, productivity and extends tool-life.
- "High pressure coolant device" or "oil mist supply device" to be arranged by the customer.

- Allowable Motor Speed ····· 40,000 rpm
- Spindle Runout ····· Within 1 μm
- Standard Size Collet ····· ø3.0-ø10.0 mm
- Weight ····· 2.3-2.8 kg
- Min. Bending Cord Radius ····· 70mm
- O.D. ····· ø40mm

Product Code	Product Name	Max. Torque	Max. Output	Max RPM	Weight	Cord Length	
7714	BMS-4040-MQL	0.5N • m	1,200W	40,000	2.3kg	0.3m	
7715	BMS-4040-MQL-2M				2.8kg	2.0m	

Standard Accessories
Collet Nut (CHN-16) / Insert / Ferrule Set
Spanner (17 x 22) 2 pcs.

Specifications
Coolant Pressure: 0.2 - 3.0MPa
Oil Mist Pressure: 0.2-1.0MPa
Power Cable with Air Hose: Connector Diameter: ø30mm
Signal Cable: Connector Diameter: ø16mm / Air hose: ø6mm

Options
Collet (Ch16OH Group): ø3.0 - ø10.0mm
Power Cable with Air Hose: Length 2m (9253), 4m (9254), 6m (9255), 8m (9256)
Signal cable: Length 2m (9257), 4m (9258), 6m (9259), 8m (9260)

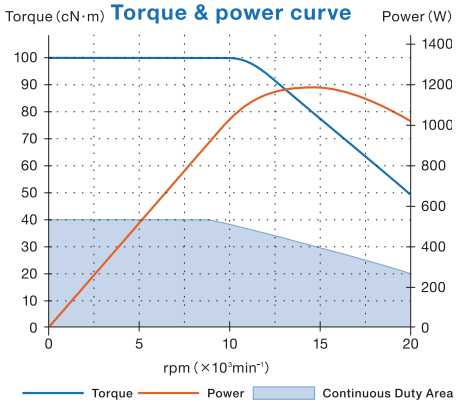

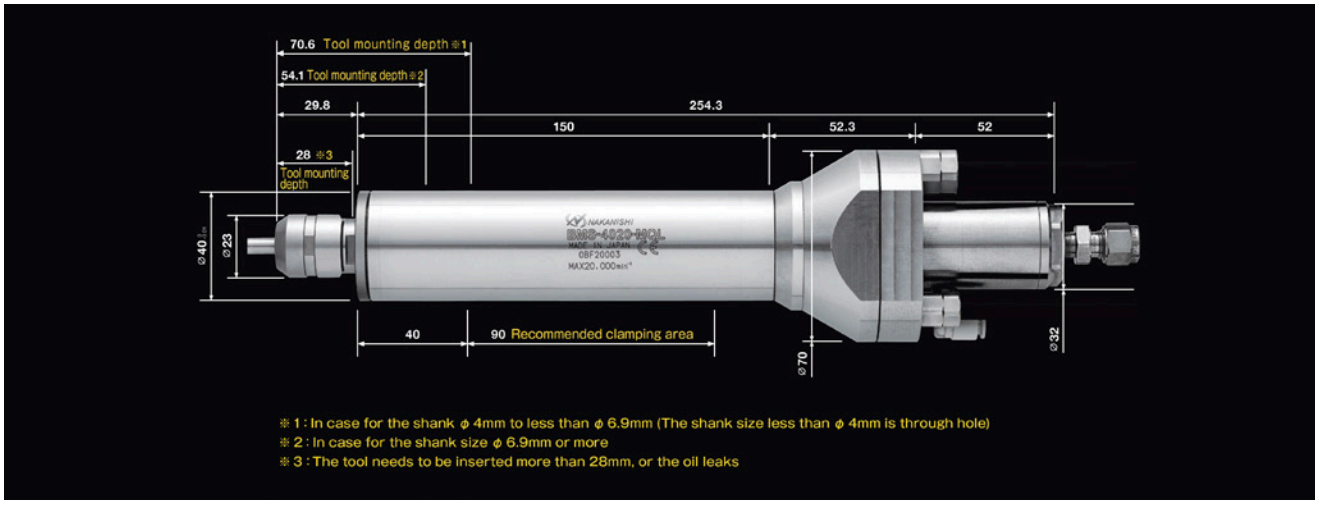

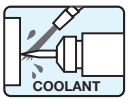

Collet CH16OH Group



※CH16OH-9.0, 10.0 Length 24.5

Product Code	Product Name	Inside Diameter d	Compatible Model	
93330	CH16OH-3.0	ø3.0	BMS-4020-MQL BMS-4040-MQL BMS-4020-MQL-2M BMS-4040-MQL-2M	
93331	CH16OH-3.175	ø3.175		
93340	CH16OH-4.0	ø4.0		
93350	CH16OH-5.0	ø5.0		
93360	CH16OH-6.0	ø6.0		
93363	CH16OH-6.35	ø6.35		
93370	CH16OH-7.0	ø7.0		
93380	CH16OH-8.0	ø8.0		
93390	CH16OH-9.0	ø9.0		
93400	CH16OH-10.0	ø10.0		

Adjuster Bolt

Product Code	Product Name	Dimensions	Compatible Model	
7739	Adjuster Bolt	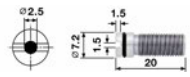	BMS-4020-MQL BMS-4040-MQL BMS-4020-MQL-2M BMS-4040-MQL-2M	

1
EmaxEVO
ESPERT
ROTUS
IMPULSE
PRESTO II
Sheenus ZERO
2
iSpeed3
E2000 ø1.0"/ø0.98"/ø0.897"
E3000 – One Piece
E3000 – Modular ø1.18"
ø1.0"/ø0.98" ø0.897"
E3000 – 80,000rpm
E4000
3
MA
ø0.897"
ø1.0" ø0.98"
ø1.18"
MS
ø0.75" ø0.79"
ø0.87" ø0.91"
ø1.0" ø0.98"
4
HES
iSpeed5
HTS
HPS
PLANET
Xpeed
ABT
5
AIR LINE KIT
6
PARTS
7
TECHNICAL DATA
8
APPLICATION EXAMPLES
INDEX

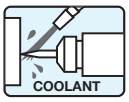

Product Code 9219 AIR QUICK CHANGE SPINDLE NR4040-AQC 40,000 rpm

Features:

- The collet holder can be replaced by using Air ON/OFF.
- The Spindle housing is made from precision ground, hardened, stainless steel (SUS).
- There are 2 models of collet holders. The collet holder model depends on the collet type selected.

  Various sizes of collets are available.
  (CHK 0.5mm - 6.35mm, CH16 3.0mm, 3.175mm, 4.0mm, 6.0mm, 6.35mm, 8.0mm and 10.0mm)

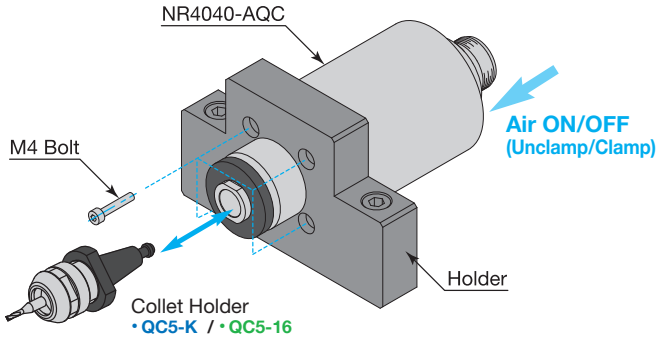

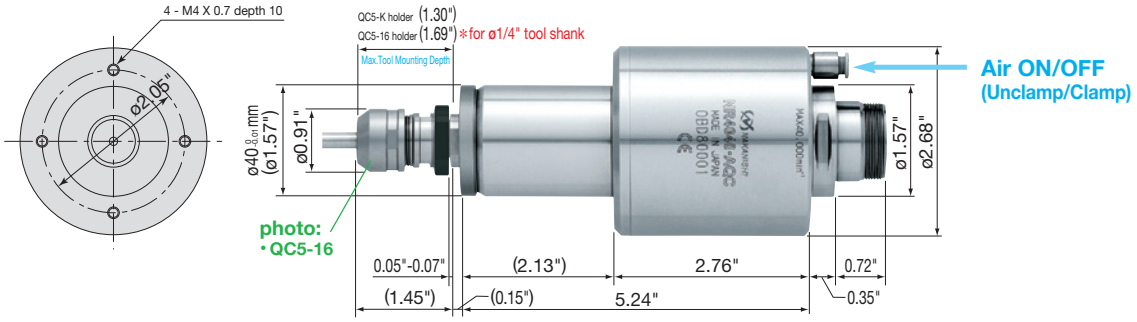

- Allowable Motor Speed ····· 40,000 rpm
- Spindle Accuracy ····· Within 1 µm
- Air for Collet Opening ····· 80~87PSI
- Weight ····· 4 lb. 12.19 oz.

< Optional >

- Collet Holder ····· **QC5-K**
- Collet (CHK-[][]) ····· ø0.5 mm~ø6.35 mm (See Page 6-p3 for details)
- Collet Nut (K-265) ····· for Collet (CHK)
- Preset Adapter ····· QC5-K ADP
- Wrench ····· 12 x 14 (2 pcs. not included)

< Optional >

- Collet Holder ····· **QC5-16**
- Collet (CH16-[][]) ····· ø3.0 mm~ø10.0 mm (See Page 6-p5 for details)
- Collet Nut (CHN-16) ····· for Collet (CH16)
- Preset Adapter ····· QC5-16 ADP
- Wrench ····· 17 x 22 (2 pcs. not included)

Air Quick Change Spindle

Product Code	Product Name	Standard Equipment · Accessories	
9219	NR4040-AQC	• Air Hose with filter (K-251) : ø6 mm x 6 ft • Wrench (36) : 1 pc.	

Note : The collet holder with collet nut, collet and wrenches for collet holder are sold separately.

*Do not exceed the allowable motor speed for the spindle.

COLLET HOLDER Taper Shank Tools and Collet Nut

Product	Product Code	Product Name	Collet	Std. Accessories	Attaches to	
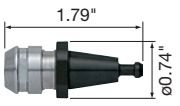	9215	• QC5-K	CHK	• Collet Nut (K-265) : 1 pc.	NR4040-AQC NRR4040-QC	
	9216	• QC5-16	CH16	• Collet Nut (CHN-16) : 1 pc.	NR4040-AQC NRR4040-QC	

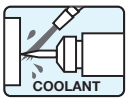

Product Code 9214 LEVER TYPE QUICK CHANGE SPINDLE NRR4040-QC 40,000 rpm

Features:

- Quick, easy and accurate tool change without the need for wrenches.
- Makes tool pre-setting outside of the machine possible.
- There are 2 models of collet holders. The collet holder model depends on the collet type selected.
  Various sizes of collets are available.
  (CHK 0.5mm - 6.35mm, CH16 3.0mm, 3.175mm, 4.0mm, 6.0mm, 6.35mm, 8.0mm and 10.0mm)
- 10 times the retention force as compared to the NRR-2651.

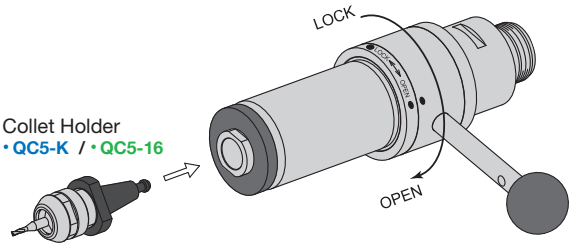

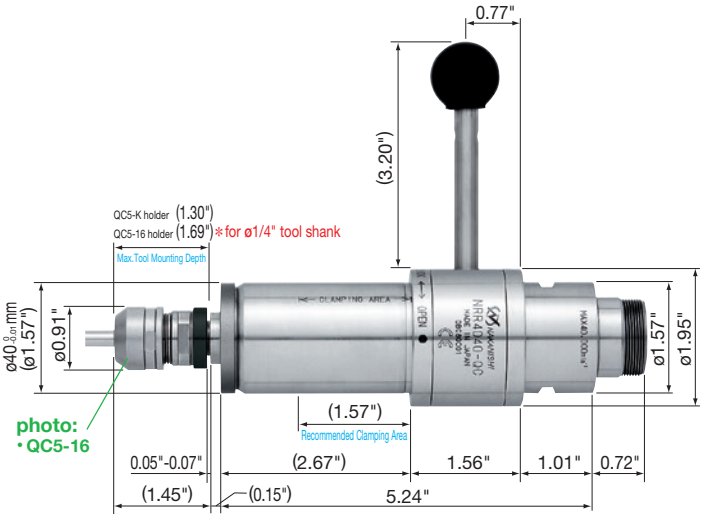

- Allowable Motor Speed ..... 40,000 rpm
- Spindle Accuracy ..... Within 1 µm
- Lever Operating Angle ..... 90˚
- Weight ..... 2 lb. 13.86 oz.

< Optional >

- Collet Holder **QC5-K**
- Collet (CHK-[][]) ..... ø0.5 mm~ø6.35 mm
  (See Page 6-p3 for details)
- Collet Nut (K-265) ..... for Collet (CHK)
- Preset Adapter ..... QC5-K ADP
- Wrench ..... 12 x 14 (2 pcs. not included)

< Optional >

- Collet Holder **QC5-16**
- Collet (CH16-[][]) ..... ø3.0 mm~ø10.0 mm
  (See Page 6-p5 for details)
- Collet Nut (CHN-16) ..... for Collet (CH16)
- Preset Adapter ..... QC5-16 ADP
- Wrench ..... 17 x 22 (2 pcs. not included)

Lever Type Quick Change Spindle

Product Code	Product Name	Standard Equipment · Accessories	
9214	NRR4040-QC	• Wrench (36) : 1 pc.	

Note : The collet holder with collet nut, collet and wrenches for collet holder are sold separately.

*Do not exceed the allowable motor speed for the spindle.

PRESET ADAPTER

Product	Product Code	Product Name	
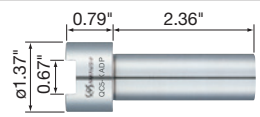	9217	• QC5-K ADP	
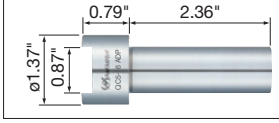	9218	• QC5-16 ADP	

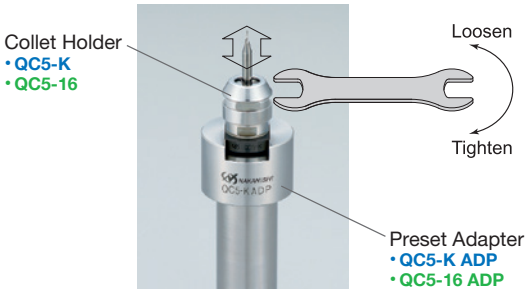

*Order by product code. 2–p87

Product Code 4504 AIR LINE KIT AL-C1204

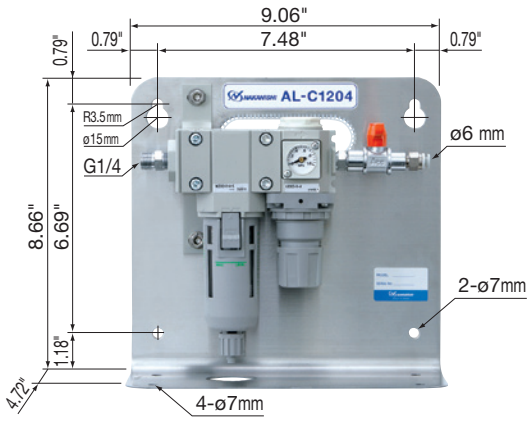

● The AL-C1204 Air Line Kit is designed to deliver clean, dry air to Electric Motors via the Controller. The filter removes small amounts of debris while the adjustable regulator provides the correct air pressure for cooling and purging.

Air Line Kit (For ø6 mm Hose · Filter Mesh 0.3 μm)

Product Code	Product Name	Standard Equipment · Accessories	
4504	AL-C1204	• Air Filter • Air Regulator • Air Pressure Gauge • Air ON-OFF Valve • Hose for Piping (K-275) : 6 ft	

MOTOR POWER CABLE with Air Hose

Product	Product Code	Product Name	Length	Std. Accessories	Fit to	Price
 Connector Diameter : ø1.18"	9253	EMCD-4000-2M	6.5 ft (2.0m)	• Air Hose	BMS-4020 · BMS-4020 2M BMS-4040 · BMS-4040 2M BMS-4020RA BMS-4040RA EM-4020 · EM-4040 EM-4020A · EM-4040A	
	9254	EMCD-4000-4M	13 ft (4.0m)			
	9255	EMCD-4000-6M	20 ft (6.0m)			
	9256	EMCD-4000-8M	26 ft * (8.0m)		BMS-4020 · BMS-4040 EM-4020 · EM-4040	

*Not for use with the 90-Degree Angle Motor (RA/A), BMS-4020 2M, BMS-4040 2M.

MOTOR SIGNAL CABLE

Product	Product Code	Product Name	Length	Std. Accessories	Fit to	Price
 Connector Diameter : ø0.63"	9257	EMCD-4000S-2M	6.5 ft (2.0m)	———	BMS-4020 · BMS-4020 2M BMS-4040 · BMS-4040 2M BMS-4020RA BMS-4040RA EM-4020 · EM-4040 EM-4020A · EM-4040A	
	9258	EMCD-4000S-4M	13 ft (4.0m)			
	9259	EMCD-4000S-6M	20 ft (6.0m)			
	9260	EMCD-4000S-8M	26 ft * (8.0m)		BMS-4020 · BMS-4040 EM-4020 · EM-4040	

*Not for use with the 90-Degree Angle Motor (RA/A), BMS-4020 2M, BMS-4040 2M.

⚠ Please purchase both the Motor Power Cable and the Motor Signal Cable

Product Code 8475 SAFETY RELAY BOX

● Mounts directly on E4000 Controller.
Allows Emergency Stop Signal from the CNC to stop the E4000 Motor Spindle or the E4000 Controller to stop the machine operation.



Weight : 11 lb. 13.98 oz.
Size : W3.54" x H2.80"

Safety Relay Box

Product Code	Product Name	Standard Equipment · Accessories	
8475	E4000-SRB	• Relay Cord (Motor Power Line) : 1.3 ft • Emergency Stop Cord : 1.3 ft	

Please contact NSK America for specification and pricing.

▼ **Example of mounting an E4000 controller with the Safety Relay Box**

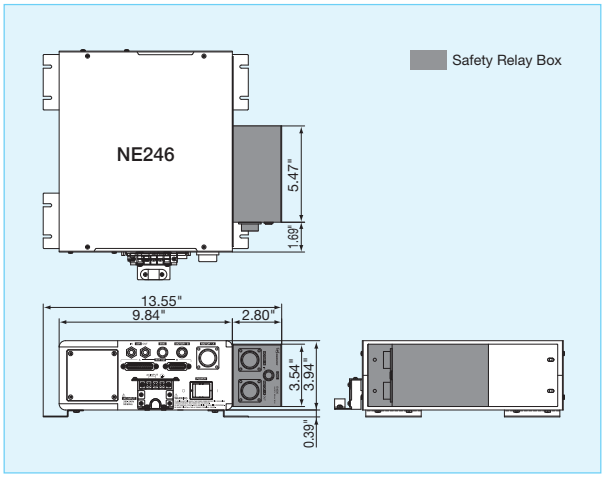

Operation Panel Extension Cord / Box For Control Panel

Product Code	Product Name	Product	Description / Specifications	Fit to	
8474	E4000-PEX4		**Operation Panel Extension Cord (4m)** • Screw (M3) : 4 pcs.	E4000 Controller	
8473	E4000-PB		**Box For Control Panel** Weight : 7.62 oz. Size : W3.46" x H3.46" • Case • Blind Plate • Screw (M3) : 6 pcs. • Screw (M4) : 2 pcs.	E4000 Controller	

25 Pin INTERFACE CABLE



● 3 Meter long Interface Cable provides a DB25 Male Connector at one end and a blunt cut on the opposite end. Includes a pin-out wire diagram for easy interfacing of I/O signals from any NSK Control to a CNC Control.

25 Pin Interface Cable

Product Code	Product Name		
DB25M	DB25M	For NSK Control Connector A	

15 Pin INTERFACE CABLE



● 3 Meter long Interface Cable provides a DB15 Male Connector at one end and a blunt cut on the opposite end. Includes a pin-out wire diagram for easy interfacing of the (OP1) "E-Stop Input Circuit" and "Safety Relay Circuit" from the NSK Control to a CNC Control.

15 Pin Interface Cable

Product Code	Product Name		
DB15M	DB15M	For NSK Control Connector B	

1
EmaxEVO
ESPERT
ROTUS
IMPULSE
PRESTO II
Sheenus ZERO
2
iSpeed3
E2000 ø1.0"/ø0.98"/ø0.897"
E3000 – One Piece
E3000 – Modular
ø1.18"
ø1.0"/ø0.98" ø0.897"
E3000 – 80,000rpm
E4000
3
MA
ø0.897"
ø1.0" ø0.98"
ø1.18"
MS
ø0.75" ø0.79"
ø0.87" ø0.91"
ø1.0" ø0.98"
4
HES
iSpeed5
HTS
HPS
PLANET
Xpeed
ABT
5
AIR LINE KIT
6
PARTS
7
TECHNICAL DATA
8
APPLICATION EXAMPLES
INDEX

Air-speed

MA SERIES

- **Modular Type**
- **Outside Diameter :**
  ø0.897", ø0.98", ø1.0" and ø1.18"
  (ø22.8, ø25, ø25.4 and ø30 mm)



MS SERIES

- **One Piece Type**
- **Outside Diameter :**
  ø0.75", ø0.79", ø0.87", ø0.91",
  ø0.98" and ø1.0"
  (ø19.05, ø20, ø22, ø23, ø25 and ø25.4 mm)



Modular Type Spindle

- Separate motor and spindle for flexible application changes.
- Easy to interchange components.



O.D. ø0.897" (ø22.8mm)
(Modular Type)
Angle Spindles and Straight Spindles are available.



O.D. ø1.18" (ø30mm)
(Modular Type)
Angle Spindles and Straight Spindles are available.

O.D. ø0.98"/1.0" (ø25/25.4mm)
(Modular Type)
Straight Spindles are available.

MA Series Features

- Gang slide NC lathes can be transformed into complex machining centers.
- Specialized machine design will be made compact and universal.
- Mounting MA Series on existing equipment can eliminate secondary operations or the equipment can be turned into a special purpose machine.
- The MA Series is applicable to secondary operation machines, single purpose machines or special machining and grinding machines.
- The air motors are explosion proof and do not generate heat even in continuous use.
- When MA Series is used at low motor speed, a speed reducer (ARG-01, or other selections) is added in order to obtain the speed of your choice.
- Collet, Jacobs drill chuck, saw arbor and grinding stone arbor are available for grinding, drilling, milling, slitting, chamfer and deburring operations.

■ Application Examples

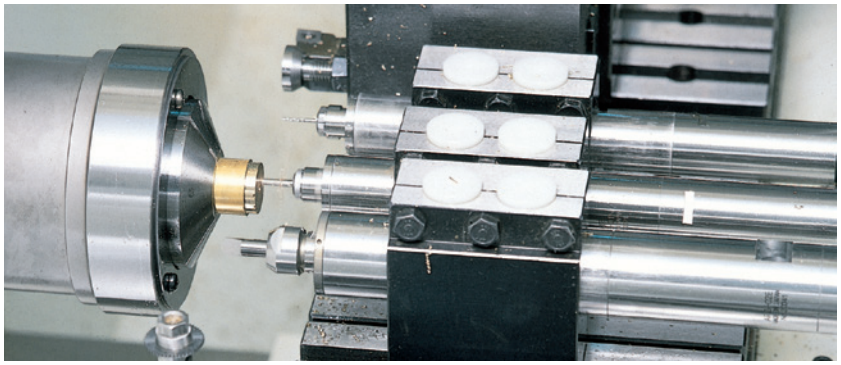
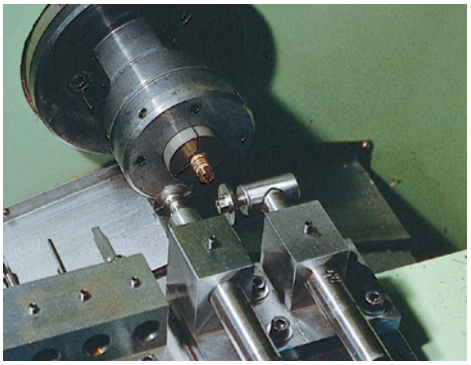
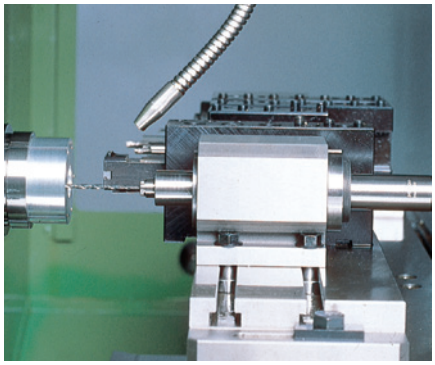
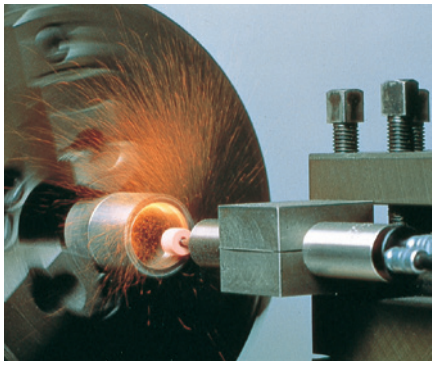
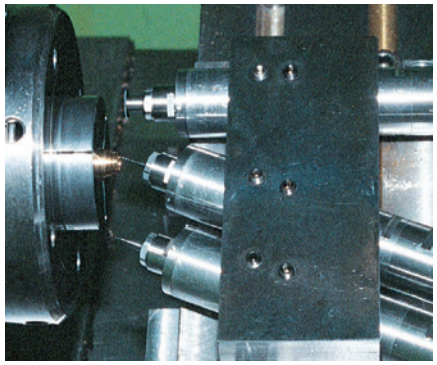

Drilling Capacity Reference Table

This table summarizes the drilling capacity for the MA Series spindles. Please use this table as a guide for the selection of the proper model given the torque, speed and size requirements for your application. Data is given for three materials Medium Carbon Steel (S45C), aluminum and brass.

*Conditions : High speed steel drill was used with a feed rate of 60mm/min. Tool life was not considered in determining the above capacities. Use this table as a reference to extrapolate suitability for a given application.

Combination as System			Speed {min⁻¹(rpm)}	Output (W)	Max. Torque (cN·m)	Max. Drill Diameter for drilling (mm)		
Motor	Speed Reducer	Spindle				S45C	Aluminum	Brass
AM-300R	———	NR-2351	30,000	57	6.9	ø1.0	ø1.5	ø2.0
AM-300R	ARG-01 (1/3.92)	NR-2351	8,000	57	26.5	ø1.9	ø2.9	ø3.4
AM-300R	ARG-02 (1/15.39)	NR-2351	2,000	57	100.9	ø2.8	ø3.8	ø4.5
AM-310R	———	NR-2351	30,000	108	13.7	ø1.5	ø2.0	ø3.0
AM-310R	ARG-01 (1/3.92)	NR-2351	8,000	108	51.9	ø2.5	ø3.5	ø4.0
AM-310R	ARG-02 (1/15.39)	NR-2351	2,000	108	201.9	ø3.5	ø4.3	ø4.8
AM-2526R	———	NR-2551	24,000	130	22.5	ø2.0	ø3.0	ø3.5
AM-2526R	ARG-2504N (1/4)	NR-2551	6,000	130	85.3	ø2.7	ø3.8	ø4.4
AM-2526R	ARG-2516N (1/16)	NR-2551	1,500	130	332.2	ø4.3	ø5.2	ø5.5
AM-3020R	———	NR-453E	19,000	130	27	ø2.3	ø4.0	ø4.5
AM-3020R	ARG-011E (1/4)	NR-453E	4,750	130	108	ø3.2	ø5.0	ø5.5
AM-3020R	ARG-021E (1/16)	NR-453E	1,190	130	432	ø4.0	ø6.0	ø6.0

MA Series ø0.897"(ø22.8 mm) System Chart

- MA Series has been designed to operate smoothly at high speed for long continuous cutting and grinding by connecting an air line kit directly between the air compressor and the air motor. (Air Line Kit Refer to 3-p10 in detail)
- Air supply and exhaust air hoses are supplied with an air motor. Air supply hose is provided with metal fitting to connect to ø0.24"(ø6 mm) one-touch joint. Air exhaust hose is supplied with silencer.

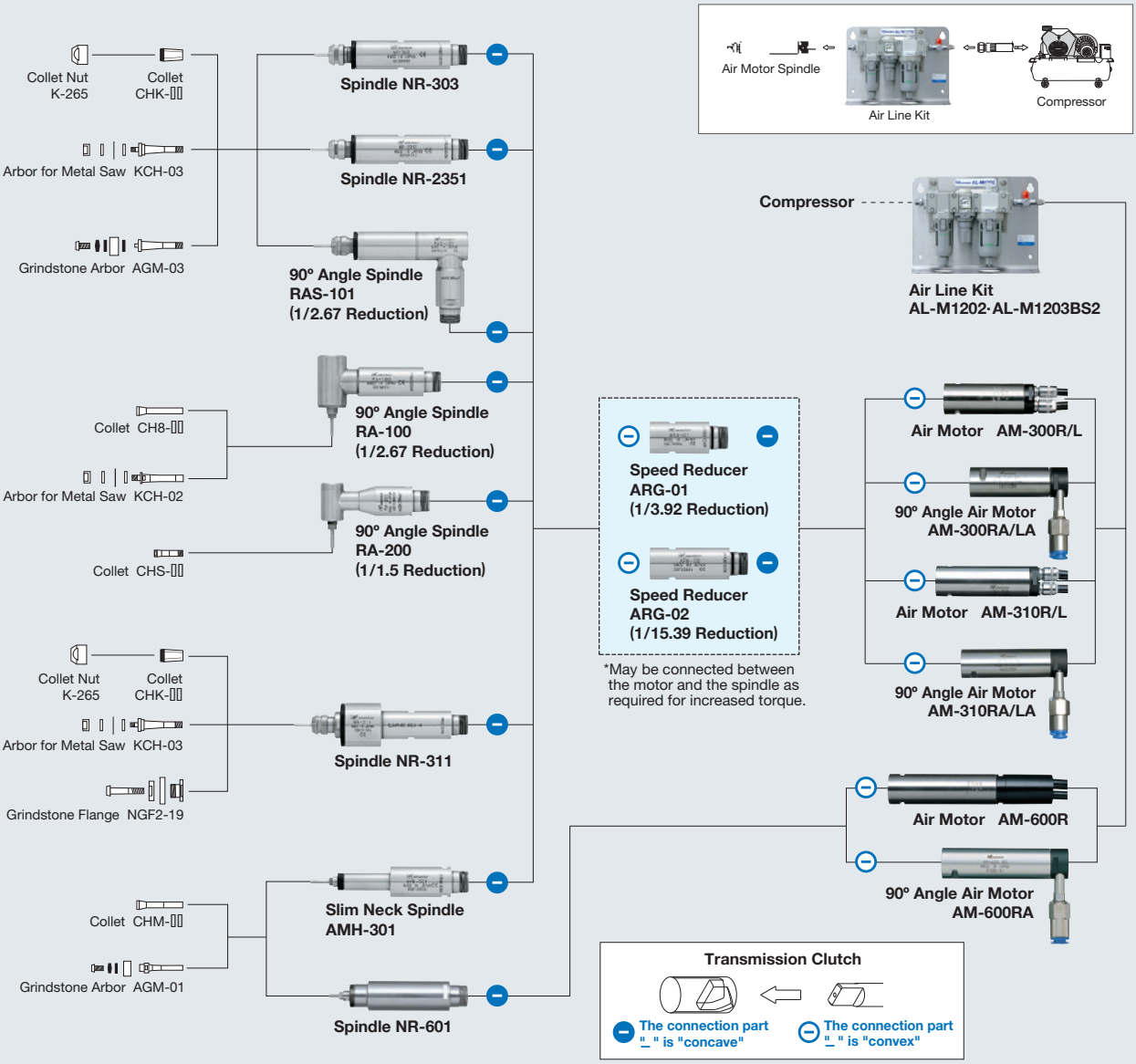

- AM-300R Torque-Speed Characteristics

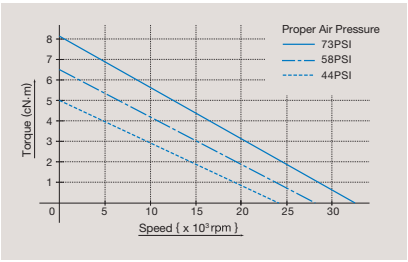

- AM-310R Torque-Speed Characteristics

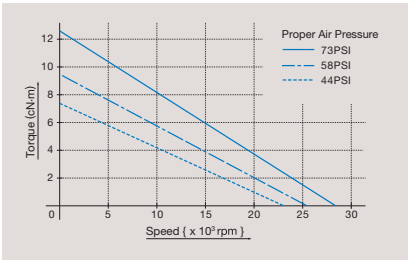

- AM-600R Torque-Speed Characteristics

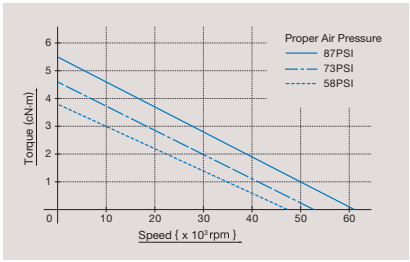

*Do not exceed the maximum motor speed recommendation for the spindles. Excess speed will dramatically reduce bearing life.

- **Small diameter ø0.897"(ø22.8 mm).**
- **Ultra-precision vane type air motor.**
- **Outside housing is made of stainless steel (SUS416).**

Product Code AS11397 AIR MOTOR AM-300R (Forward Rotation) 57W 30,000 rpm

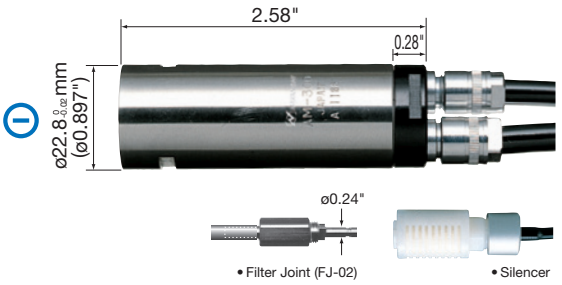

- Motor Speed ····· 30,000 rpm(58PSI)
- Max. Output Power ····· 57W
- Proper Air Pressure ····· 44~73PSI
- Air Consumption ····· 3.18CFM
- Motor Hose (Diameter / Length)
  Air Intake ····· ø3.7 (I.D.) x ø5.7 (O.D.) mm / 6 ft
  Exhaust Air ····· ø5.0 (I.D.) x ø6.5 (O.D.) mm / 3 ft
- Weight (w/o hose) ····· 4.76 oz.

● Ultra precision, compact, vane-type air motor provides high torque with small volume of air consumption. Withstands long continuous operation without heat generation. Silencer keeps noise to a minimum.

Air Motor (R=Forward, L=Reverse)

Product Code	Product Name	Standard Equipment · Accessories	
AS11397	AM-300R	• Hose (K-221) : 6 ft • Filter Joint (FJ-02) • Silencer (K-209) • Wrench (20 x 24) : 1 pc.	
AS81083	AM-300L		

Product Code AS11395 90° ANGLE TYPE AIR MOTOR AM-300RA (Forward Rotation) 57W 30,000 rpm

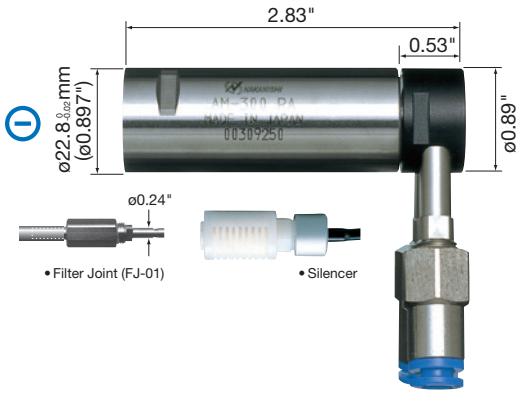

- Motor Speed ····· 30,000 rpm(58PSI)
- Max. Output Power ····· 57W
- Proper Air Pressure ····· 44~73PSI
- Air Consumption ····· 3.18CFM
- Motor Hose (Diameter / Length)
  Air Intake ····· ø4.0 (I.D.) x ø6.0 (O.D.) mm / 6 ft
  Exhaust Air ····· ø5.5 (I.D.) x ø8.0 (O.D.) mm / 3 ft
- Weight (w/o hose) ····· 6.21 oz.

● Air hose is attached on the rear end of air motor at 90° angle which decreases the installation space.

90° Angle Type Air Motor (RA=Forward, LA=Reverse)

Product Code	Product Name	Standard Equipment · Accessories	
AS11395	AM-300RA	• Hose (K-215) : ø6 mm x 6 ft • Hose (K-216) : ø8 mm x 3 ft • Filter Joint (FJ-01) • Silencer (K-208) • Wrench (20 x 24) : 1 pc.	
AS81084	AM-300LA		

Product Code AS41079 AIR MOTOR AM-310R (Forward Rotation) 108W 30,000 rpm



- Motor Speed ····· 30,000 rpm(73PSI)
- Max. Output Power ····· 108W
- Proper Air Pressure ····· 44~73PSI
- Air Consumption ····· 6.71CFM
- Motor Hose (Diameter / Length)
  Air Intake ····· ø4.5 (I.D.) x ø6.7 (O.D.) mm / 6 ft
  Exhaust Air ····· ø5.5 (I.D.) x ø7.5 (O.D.) mm / 3 ft
- Weight (w/o hose) ····· 7.16 oz.

● Ultra-precision, compact, vane-type air motor provides high torque with small volume of air consumption. Withstands long continuous operation without heat generation. Silencer keeps noise to a minimum.

Air Motor (R=Forward, L=Reverse)

Product Code	Product Name	Standard Equipment · Accessories	
AS41079	AM-310R	• Hose (K-204) : 6 ft • Filter Joint (FJ-02) • Silencer (K-208) • Wrench (20 x 24) : 1 pc.	
AS81085	AM-310L		

Product Code AS41081 — 90° ANGLE TYPE AIR MOTOR AM-310RA (Forward Rotation) 108W 30,000 rpm

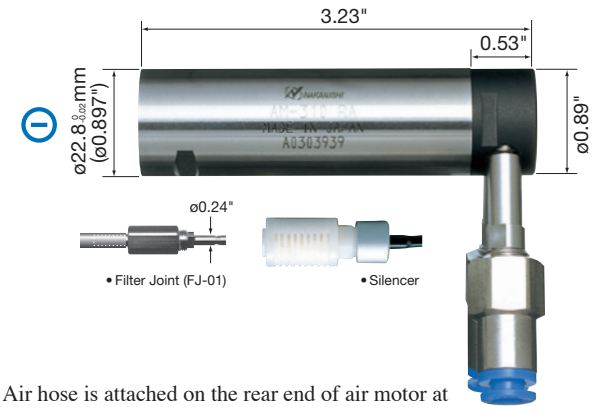

- Motor Speed ····· 30,000 rpm (73PSI)
- Max. Output Power ····· 108W
- Proper Air Pressure ····· 44~73PSI
- Air Consumption ····· 6.00CFM
- Motor Hose (Diameter / Length)
  Air Intake ····· ø4.0 (I.D.) x ø6.0 (O.D.) mm / 6 ft
  Exhaust Air ····· ø5.5 (I.D.) x ø8.0 (O.D.) mm / 3 ft
- Weight (w/o hose) ····· 8.61 oz.

● Air hose is attached on the rear end of air motor at 90° angle which decreases the installation space.

90° Angle Type Air Motor (RA=Forward, LA=Reverse)

Product Code	Product Name	Standard Equipment · Accessories	
AS41081	AM-310RA	• Hose (K-215) : ø6 mm x 6 ft • Hose (K-216) : ø8 mm x 3 ft • Filter Joint (FJ-01) • Silencer (K-208) • Wrench (20 x 24) : 1 pc.	
AS81082	AM-310LA		

Product Code AS11071 — AIR MOTOR AM-600R (Forward Rotation) 76W 58,000 rpm

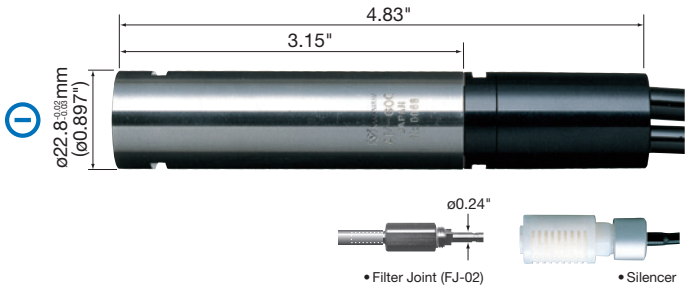

- Motor Speed ····· 58,000 rpm (87PSI)
- Max. Output Power ····· 76W
- Proper Air Pressure ····· 58~87PSI
- Air Consumption ····· 5.12CFM
- Motor Hose (Diameter / Length)
  Air Intake ····· ø4.5 (I.D.) x ø6.7 (O.D.) mm / 6 ft
  Exhaust Air ····· ø5.5 (I.D.) x ø7.5 (O.D.) mm / 3 ft
- Weight (w/o hose) ····· 7.58 oz.

● Assembled with high quality ball bearings enabling higher grinding power at a maximum speed of 58,000 min-1(rpm). Suitable for very precise processing works.

Air Motor

Product Code	Product Name	Standard Equipment · Accessories	
AS11071	AM-600R	• Hose (K-204) : 6 ft • Filter Joint (FJ-02) • Silencer (K-208) • Wrench (20 x 24) : 1 pc.	

Product Code AS12512 — 90° ANGLE TYPE AIR MOTOR AM-600RA (Forward Rotation) 69W 55,000 rpm

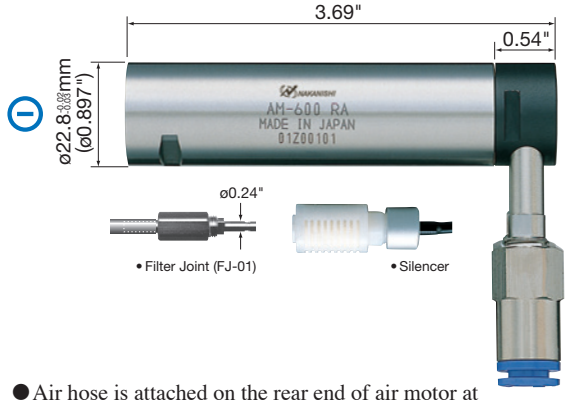

- Motor Speed ····· 55,000 rpm (87PSI)
- Max. Output Power ····· 69W
- Proper Air Pressure ····· 58~87PSI
- Air Consumption ····· 4.94CFM
- Motor Hose (Diameter / Length)
  Air Intake ····· ø4.0 (I.D.) x ø6.0 (O.D.) mm / 6 ft
  Exhaust Air ····· ø5.5 (I.D.) x ø8.0 (O.D.) mm / 3 ft
- Weight (w/o hose) ····· 8.99 oz.

● Air hose is attached on the rear end of air motor at 90° angle which decreases the installation space.

90° Angle Type Air Motor

Product Code	Product Name	Standard Equipment · Accessories	
AS12512	AM-600RA	• Hose (K-215) : ø6 mm x 6 ft • Hose (K-216) : ø8 mm x 3 ft • Filter Joint (FJ-01) • Silencer (K-208) • Wrench (20 x 24) : 1 pc.	

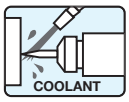

MA Series can be used in conjunction with water or oil based coolants.

1
EmaxEVO
ESPERT
ROTUS
IMPULSE
PRESTO II
Sheenus ZERO
2
iSpeed3
E2000 ø1.0"/ø0.98"/ø0.897"
E3000 – One Piece
E3000 – Modular
ø1.18"
ø1.0"/ø0.98" ø0.897"
E3000 – 80,000rpm
E4000
3
MA
ø0.897"
ø1.0" ø0.98"
ø1.18"
MS
ø0.75" ø0.79"
ø0.87" ø0.91"
ø1.0" ø0.98"
4
HES
iSpeed5
HTS
HPS
PLANET
Xpeed
ABT
5
AIR LINE KIT
6
PARTS
7
TECHNICAL DATA
8
APPLICATION EXAMPLES
INDEX

Product Code AS41830 SPINDLE NR-303 30,000 rpm

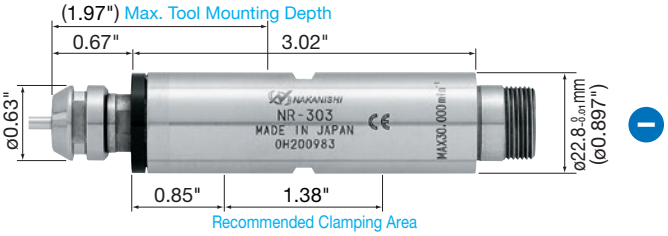

- Allowable Motor Speed ····· 30,000 rpm
- Spindle Accuracy ····· Within 2 µm
- Standard Size Collet (CHK-3.175) ····· ø1/8"
- Weight ····· 7.58 oz.

< Optional >

- Collet (CHK-□□) ····· ø0.5 mm~ø6.35 mm (See Page 6-p3 for details)
- Collet Nut (K-265) ····· For Collet (CHK)
- Metal Saw Arbor (KCH-03) ····· For ø0.24" (I.D.) x ø1.18" (O.D.)
- Grindstone Arbor (AGM-03) ···· For grinding wheel with I.D. of ø5 mm

● This spindle is ideal for small diameter drilling, milling and grinding. A wide selection of collets and accessories is available.

Spindle

Product Code	Product Name	Standard Equipment · Accessories	
AS41830	NR-303	• Collet ø1/8" (CHK-3.175) : 1 pc. • Collet Nut (K-265) : 1 pc. • Wrench (12 x 14) : 2 pcs., (20 x 24) : 1 pc.	

Product Code AS18220 SPINDLE NR-2351 (Ceramic Bearings) 50,000 rpm

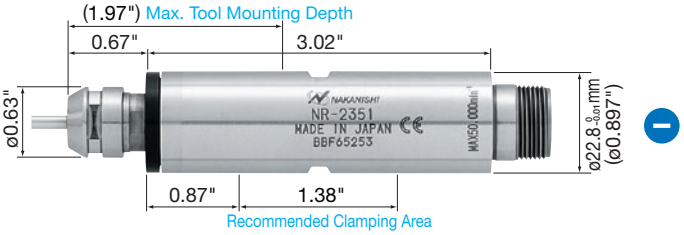

- Allowable Motor Speed ····· 50,000 rpm
- Spindle Accuracy ····· Within 1 µm
- Standard Size Collet (CHK-3.175) ····· ø1/8"
- Weight ····· 7.58 oz.

< Optional >

- Collet (CHK-□□) ····· ø0.5 mm~ø6.35 mm (See Page 6-p3 for details)
- Collet Nut (K-265) ····· For Collet (CHK)
- Metal Saw Arbor (KCH-03) ····· For ø0.24" (I.D.) x ø1.18" (O.D.)
- Grindstone Arbor (AGM-03) ···· For grinding wheel with I.D. of ø5 mm

● This spindle is ideal for ultra-precision, small diameter drilling, milling and grinding. A wide selection of collets and accessories is available.

Spindle

Product Code	Product Name	Standard Equipment · Accessories	
AS18220	NR-2351	• Collet ø1/8" (CHK-3.175) : 1 pc. • Collet Nut (K-265) : 1 pc. • Wrench (12 x 14) : 2 pcs., (20 x 24) : 1 pc.	

*Do not exceed the allowable motor speed for the spindle.

COOLANT

Caution : Use the motor at motor speed less than maximum allowable speed or use the speed reducer. DO NOT exceed the allowable motor speed for the spindle and the reducer.

Product Code AS51094 90° ANGLE SPINDLE RAS-101

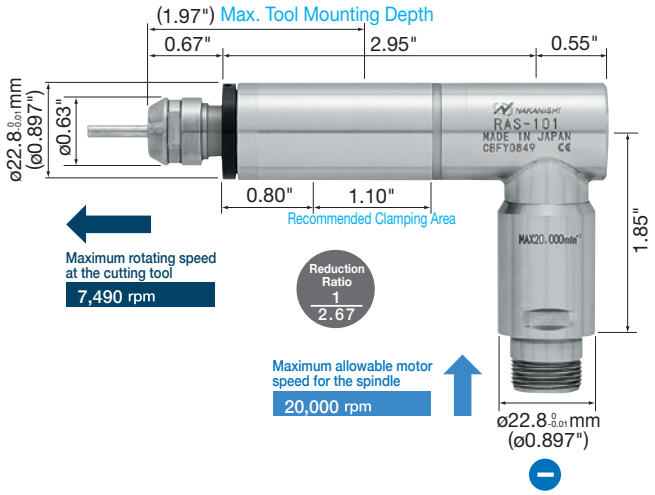

Maximum allowable motor speed for the spindle 20,000 rpm

Maximum rotating speed at the cutting tool <Reduction Ratio : 1/2.67> 7,490 rpm

- Spindle Accuracy ····· Within 2 µm
- Standard Size Collet (CHK-3.175) ····· ø1/8"
- Weight ····· 11.46 oz.

< Optional >

- Collet (CHK-[][]) ····· ø0.5 mm~ø6.35 mm (See Page 6-p3 for details)
- Collet Nut (K-265) ····· For Collet (CHK)
- Metal Saw Arbor (KCH-03)····· For ø0.24" (I.D.) x ø1.18" (O.D.)
- Grindstone Arbor (AGM-03) ····· For grinding wheel I.D. of ø5 mm

●90°Angle type spindle with wide chucking range up to ø1/4"(ø6.35 mm) is suitable for installations where space restrictions exist.

90° Angle Spindle

Product Code	Product Name	Standard Equipment · Accessories	
AS51094	RAS-101	• Collet ø1/8" (CHK-3.175) : 1 pc. • Collet Nut (K-265) : 1 pc. • Wrench (12 x 14) : 2 pcs., (20 x 24) : 1 pc.	

Product Code AS11411 90° ANGLE SPINDLE RA-100

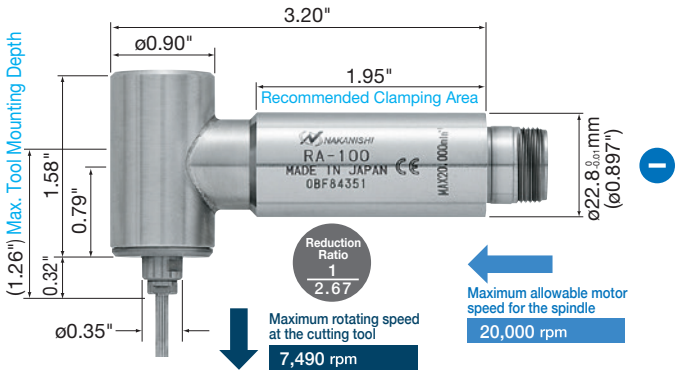

Maximum allowable motor speed for the spindle 20,000 rpm

Maximum rotating speed at the cutting tool <Reduction Ratio : 1/2.67> 7,490 rpm

- Standard Size Collet (CH8-3.175) ····· ø1/8"
- Weight ····· 9.56 oz.

< Optional >

- Collet (CH8-[][]) ····· ø0.8 mm~ø3.175 mm (See Page 6-p5 for details)
- Metal Saw Arbor (KCH-02) ····· For ø0.24" (I.D.) x ø1.18" (O.D.)

●This spindle is capable of working on corners difficult to work with straight type, drilling on side face and, slitting of aluminum, brass, etc. with the use of ø1.18"(ø30 mm) Metal Saw.

90° Angle Spindle

Product Code	Product Name	Standard Equipment · Accessories	
AS11411	RA-100	• Collet ø1/8" (CH8-3.175) : 1 pc. • Wrench (7 x 5.5), (8 x 5), (20 x 24) : 1 pc. each.	

Product Code AS11412 90° ANGLE SPINDLE RA-200

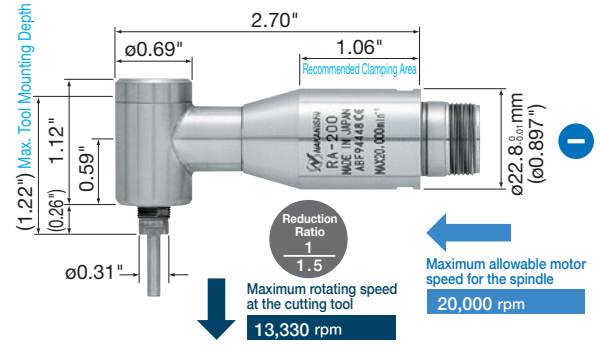

Maximum allowable motor speed for the spindle 20,000 rpm

Maximum rotating speed at the cutting tool <Reduction Ratio : 1/1.5> 13,330 rpm

- Standard Size Collet (CHS-3.175) ····· ø1/8"
- Weight ····· 5.82 oz.

< Optional >

- Collet (CHS-[][]) ····· ø0.8 mm~ø3.175 mm (See Page 6-p4 for details)

●This spindle can be used for working on corners difficult to work or unfit for working with straight type, drilling on side face, etc.

90° Angle Spindle

Product Code	Product Name	Standard Equipment · Accessories	
AS11412	RA-200	• Collet ø1/8" (CHS-3.175) : 1 pc. • Wrench (7 x 5.1), (8 x 5), (20 x 24) : 1 pc. each.	

*Order by product code.

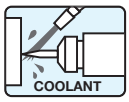

Product Code AS42511 SPINDLE NR-311 30,000 rpm

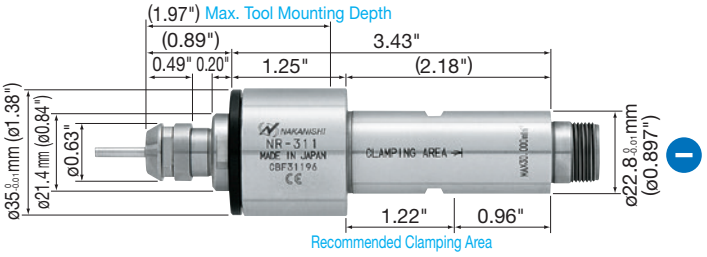

- Allowable Motor Spe e d ..... 30,000 rpm
- Spindle Accuracy ..... Within 2 µm
- Standard Size Collet (CHK-3.175) ..... ø1/8"
- Weight ..... 13.05 oz.

< Optional >

- Collet (CHK-□□) ..... ø0.5 mm~ø6.35 mm (See Page 6-p3 for details)
- Collet Nut (K-265) ..... For Collet (CHK)
- Metal Saw Arbor (KCH-03) ..... For ø0.24" (I.D.) x ø1.18" (O.D.)
- Grindstone Flange (NGF2-19) ... ø19.05 (I.D.) x ø40 (O.D.) x 7 (W) mm

● Large precision angular ball bearings are assembled on the front part of the spindle to provide rigidity on both the radial and the thrust sides. This spindle is suitable for grinding of deep hole, grinding by ø1.57" (40 mm) grindstone and small-diameter end milling.

Spindle

Product Code	Product Name	Standard Equipment · Accessories	
AS42511	NR-311	• Collet ø1/8" (CHK-3.175) : 1 pc. • Collet Nut (K-265) : 1 pc. • Wrench (12 x 14), (20 x 24) : 1 pc. each	

Product Code AS11510 SPINDLE AMH-301 30,000 rpm

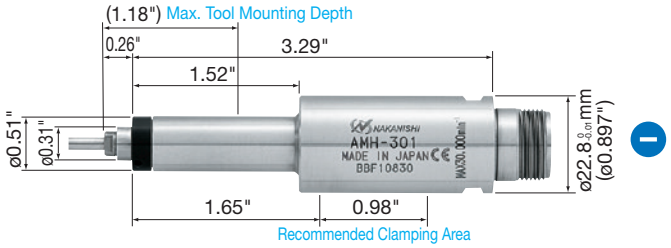

- Allowable Motor Spe e d ..... 30,000 rpm
- Standard Size Collet (CHM-3.175) ..... ø1/8"
- Weight ..... 6.03 oz.

< Optional >

- Collet (CHM-□□) ..... ø1.0 mm~ø3.175 mm (See Page 6-p4 for details)
- Grindstone Arbor (AGM-01) ..... For grinding wheel with I.D. of ø5 mm

● Suitable for the grinding of the inner surface of slender and deep holes. (Example) If a ø0.55" grindstone is mounted on the grinding arbor AGM-01, this spindle is suitable for the inner grinding of ø0.59" or more and with the depth of 1.57" or less.

Spindle

Product Code	Product Name	Standard Equipment · Accessories	
AS11510	AMH-301	• Collet ø1/8" (CHM-3.175) : 1 pc. • Wrench (7 x 5.1), (6 x 4.5), (20 x 24) : 1 pc. each	

Product Code AS11073 SPINDLE NR-601 60,000 rpm

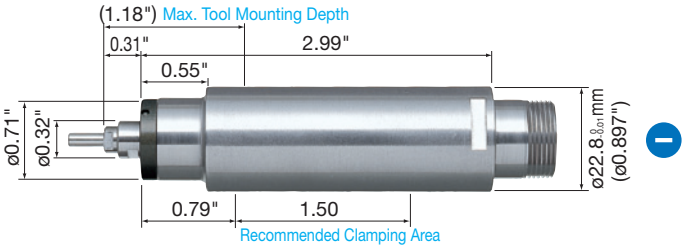

- Adaptable Motor ..... AM-600R (RA)
- Allowable Motor Spe e d ..... 60,000 rpm
- Standard Size Collet (CHM-3.175) ..... ø1/8"
- Weight ..... 7.34 oz.

< Optional >

- Collet (CHM-□□) ..... ø1.0 mm~ø3.175 mm (See Page 6-p4 for details)
- Grindstone Arbor (AGM-01) ..... For grinding wheel with I.D. of ø5 mm

● This spindle with high-speed rotation is suitable for internal grinding. Also ideal for small-diameter drilling of higher accuracy.

Spindle

Product Code	Product Name	Standard Equipment · Accessories	
AS10073	NR-601	• Collet ø1/8" (CHM-3.175) : 1 pc. • Wrench (7 x 5.1), (6 x 4.5), (20 x 24) : 1 pc. each	

*Do not exceed the allowable motor speed for the spindle.

Caution : Use the motor at motor speed less than maximum allowable speed or use the speed reducer. DO NOT exceed the allowable motor speed for the spindle and the reducer.

Product Code AS11414 SPEED REDUCER 1/3.92 ARG-01

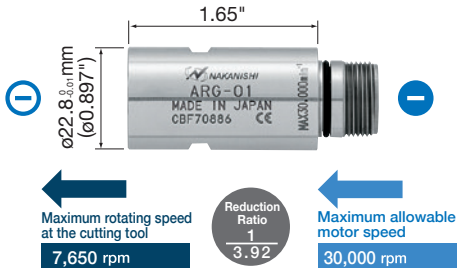

Maximum allowable motor speed 30,000 rpm

Maximum rotating speed at the cutting tool <Reduction Ratio : 1/3.92> 7,650 rpm

- Speed Reducing Mechanism ····· By planetary gear system
- Weight ····· 3.81 oz.

● If the speed reducer is connected between the motor and the spindle, it reduces the rotating speed and increases the torque while keeping the motor speed unchanged.

Speed Reducer 1/3.92

Product Code	Product Name	Speed Reduction Ratio	
AS11414	ARG-01	Speed Reduction Ratio 1/3.92	

Product Code AS11428 SPEED REDUCER 1/15.39 ARG-02

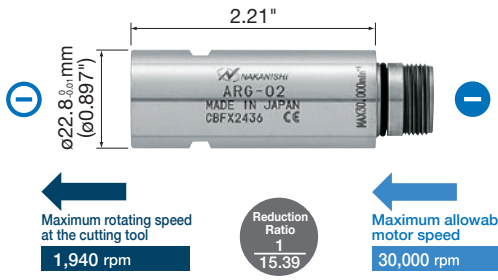

Maximum allowable motor speed 30,000 rpm

Maximum rotating speed at the cutting tool <Reduction Ratio : 1/15.39> 1,940 rpm

- Speed Reducing Mechanism ····· By planetary gear system
- Weight ····· 5.22 oz.

● If the speed reducer is connected between the motor and the spindle, it reduces the rotating speed and increases the torque while keeping the motor speed unchanged.

Speed Reducer 1/15.39

Product Code	Product Name	Speed Reduction Ratio	
AS11428	ARG-02	Speed Reduction Ratio 1/15.39	

*Order by product code.

Product Code 4502 AIR LINE KIT AL-M1202

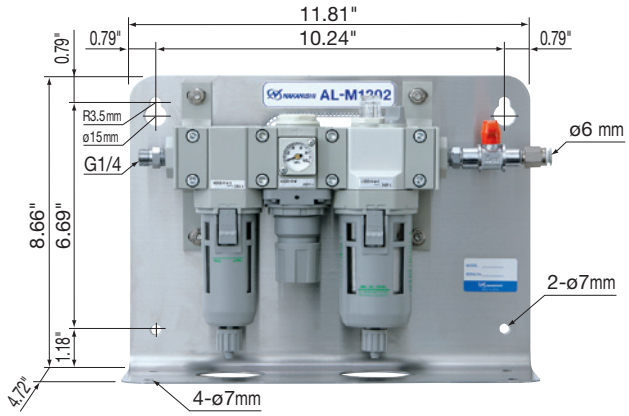

●The AL-M1202 provides simple, automatic conditioning of the air supplied to NAKANISHI Air Motors. The filter removes water and impure substances from the input air supply. The regulator maintains the proper air pressure, and the lubricator ensures proper oil flow to the motor and spindle. This Air Line Kit is wall mountable.

Air Line Kit (For ø6 mm Hose · **Filter Mesh 0.3 µm**)

Product Code	Product Name	Standard Equipment · Accessories	
4502	AL-M1202	• Air Filter • Air Regulator • Air Pressure Gauge • Lubricator • Air ON-OFF Valve • Hose for Piping (K-275) : 6 ft • Lubricating Oil (K-211) : 1 pc.	

Product Code 4503 AIR LINE KIT AL-M1203BS2

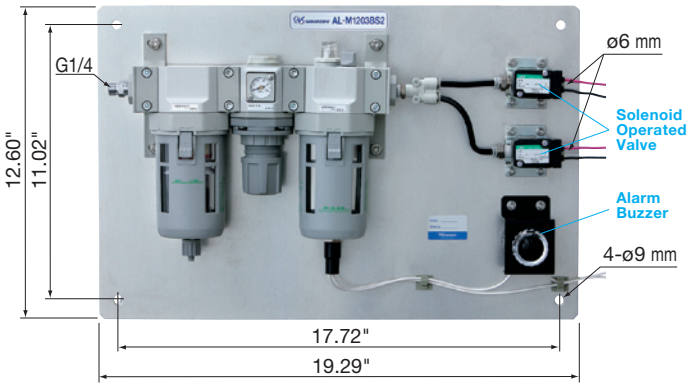

●The AL-M1203BS2 is equipped with 2 (DC+24V) Air Solenoids, a large capacity filter, large capacity oil reservoir, high flow regulator and a low oil level warning alarm, making this unit ideal for use on CNC machines. This Air Line Kit allows for the operation of 2 Air Motors.

Air Line Kit (For ø6 mm Hose · **Filter Mesh 0.3 µm**)

Product Code	Product Name	Standard Equipment · Accessories	
4503	AL-M1203 BS2	• Air Filter • Air Regulator • Air Pressure Gauge • Lubricator • Solenoid Valve (DC 24V) : 2 pcs. • Buzzer (DC 24V) • Hose for Piping (K-275) : 6 ft • Lubricating Oil (K-202) : 1 pc.	

LUBRICATING OIL

Lubricating Oil (4 oz.)

Product Code	Product Name	Product	
AA10478	K-211		

Lubricating Oil (32 oz.)

Product Code	Product Name	Product	
AA10480	K-202		

*Order by product code.

1
EmaxEVO
ESPERT
ROTUS
IMPULSE
PRESTO II
Sheenus ZERO
2
iSpeed3
E2000
ø1.0"/ø0.98"/ø0.897"
E3000
– One Piece
E3000
– Modular
ø1.18"
ø1.0"/ø0.98"
ø0.897"
E3000
– 80,000rpm
E4000
3
MA
ø0.897"
ø1.0"
ø0.98"
ø1.18"
MS
ø0.75"
ø0.79"
ø0.87"
ø0.91"
ø1.0"
ø0.98"
4
HES
iSpeed5
HTS
HPS
PLANET
Xpeed
ABT
5
AIR LINE KIT
6
PARTS
7
TECHNICAL DATA
8
APPLICATION EXAMPLES
INDEX

MA Series ø1.0"(ø25.4 mm), ø0.98"(ø25 mm) System Chart

- MA Series has been designed to operate smoothly at high speed for long continuous cutting and grinding by connecting an air line kit directly between the air compressor and the air motor. (Air Line Kit Refer to 3-p16 in detail)
- Air supply and exhaust air hoses are supplied with an air motor. Air supply hose is provided with metal fitting to connect to ø0.24"(ø6 mm) one-touch joint. Air exhaust hose is supplied with silencer.

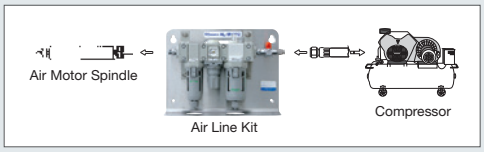

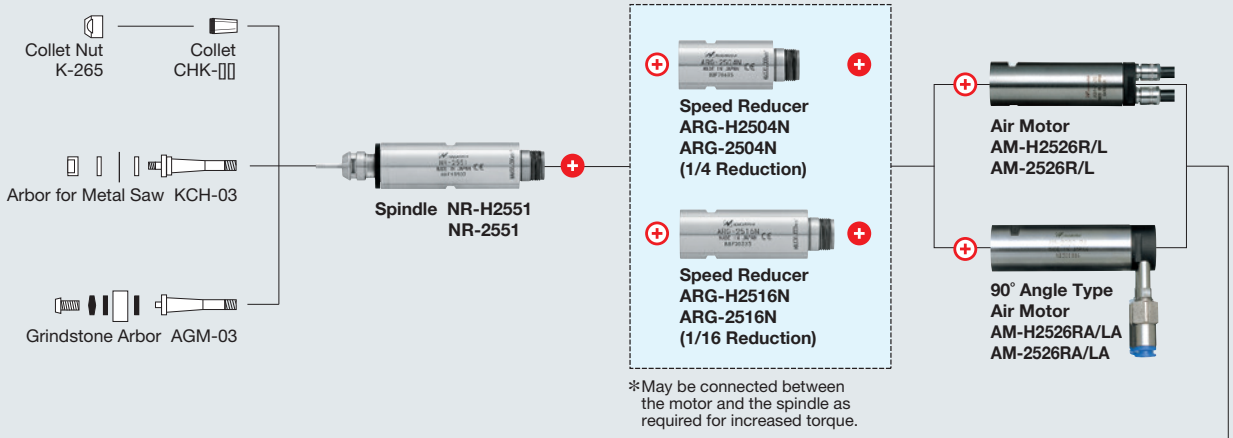

*May be connected between the motor and the spindle as required for increased torque.

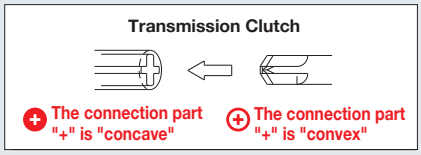



*Do not exceed the maximum motor speed recommendation for the spindles. Excess speed will dramatically reduce bearing life.

- **Small diameter ø1.0"(ø25.4 mm), ø0.98"(ø25 mm).**
- **Ultra-precision vane type air motor.**
  Rigid stainless steel (SUS416) outer housing.

Product Code AS81805P AIR MOTOR AM-H2526R (Forward Rotation) 130W 24,000 rpm

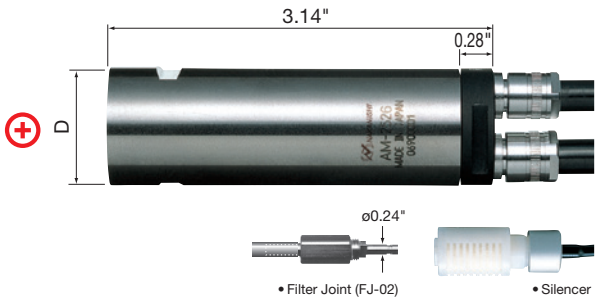

- Motor Speed ····· 24,000 rpm (73PSI)
- Max. Output Power ····· 130W
- Proper Air Pressure ····· 44~73PSI
- Air Consumption ····· 7.24CFM
- Motor Hose (Diameter / Length)
  Air Intake ····· ø4.5 (I.D.) x ø6.7 (O.D.) mm / 6 ft
  Exhaust Air ····· ø5.5 (I.D.) x ø7.5 (O.D.) mm / 3 ft
- Weight (w/o hose) ····· 7.05 oz.

● Ultra precision, compact, vane-type air motor provides high torque with small volume of air consumption. Withstands long continuous operation without heat generation. Silencer keeps noise to a minimum.

Air Motor D=ø1.0"(ø25.4 mm), ø0.98"(ø25 mm) (R=Forward, L=Reverse)

Product Code	Product Name	Outside Diameter	Standard Equipment · Accessories	
AS81805P	AM-H2526R	ø1.0" (ø25.4 mm)	• Hose (K-204) : 6 ft • Filter Joint (FJ-02) • Silencer (K-208) • Wrench (22 x 27) : 1 pc.	
AS81806P	AM-H2526L			
AS81801P	AM-2526R	ø0.98" (ø25 mm)		
AS81802P	AM-2526L			

Product Code AS81807P AIR MOTOR AM-H2526RA (Forward Rotation) 120W 22,000 rpm

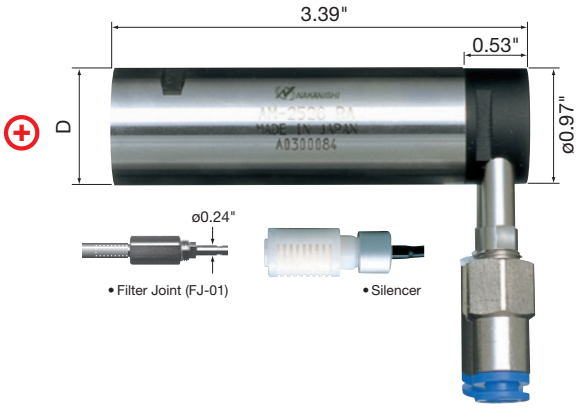

- Motor Speed ····· 22,000 rpm (73PSI)
- Max. Output Power ····· 120W
- Proper Air Pressure ····· 44~73PSI
- Air Consumption ····· 6.00CFM
- Motor Hose (Diameter / Length)
  Air Intake ····· ø4.0 (I.D.) x ø6.0 (O.D.) mm / 6 ft
  Exhaust Air ····· ø5.5 (I.D.) x ø8.0 (O.D.) mm / 3 ft
- Weight (w/o hose) ····· 8.50 oz.

● The installation space is reduced by installing the air intake and exhaust air hoses at 90° angle from the rear end of the motor.

Air Motor D=ø1.0" (ø25.4 mm), ø0.98" (ø25 mm) (R=Forward, L=Reverse)

Product Code	Product Name	Outside Diameter	Standard Equipment · Accessories	
AS81807P	AM-H2526RA	ø1.0" (ø25.4 mm)	• Hose (K-215) : ø6 mm x 6 ft • Hose (K-256) : ø8 mm x 3 ft • Filter Joint (FJ-01) • Silencer (K-209) • Wrench (22 x 27) : 1 pc.	
AS81808P	AM-H2526LA			
AS81803P	AM-2526RA	ø0.98" (ø25 mm)		
AS81804P	AM-2526LA			

● AM-2526R Torque-Speed Characteristics

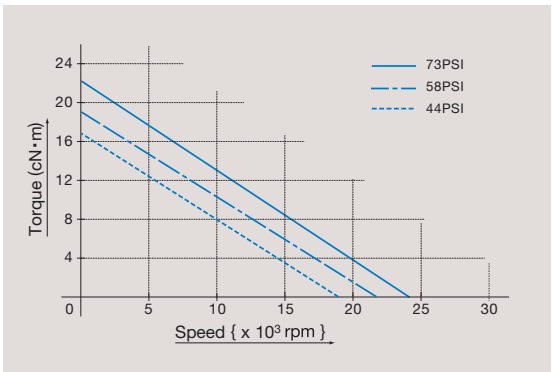

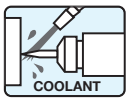

MA Series can be used in conjunction with water or oil based coolants.

Product Code AS81820P SPINDLE NR-H2551 (Ceramic Bearing) 50,000 rpm

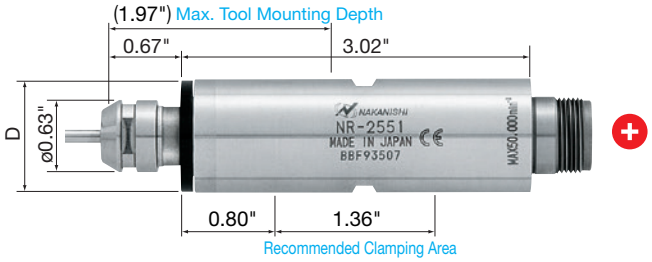

- Allowable Motor Speed ····· 50,000 rpm
- Spindle Accuracy ····· Within 1 µm
- Standard Size Collet (CHK-3.175) ····· ø1/8"
- Weight ····· 8.92 oz.

< Optional >

- Collet (CHK-□□) ····· ø0.5 mm~ø6.35 mm (See Page 6-p3 for details)
- Collet Nut (K-265) ····· For Collet (CHK)
- Metal Saw Arbor (KCH-03) ····· For ø0.24" (I.D.) x ø1.18" (O.D.)
- Grindstone Arbor (AGM-03) ····· For grinding wheel with I.D. of ø5 mm

● Designed for increased durability by utilizing ceramic bearings, for obtaining strong rigidity in both radial direction and thrust directions by utilizing 2 super-precision ceramic bearings on the front side and 2 on the rear side. This spindle can be used for small-diameter milling, drilling, slitting, chamfering, grinding, etc.

Spindle D = ø1.0"(ø25.4 mm), ø0.98"(ø25 mm)

Product Code	Product Name	Outside Diameter	Standard Equipment · Accessories	
AS81820P	NR-H2551	ø1.0" (ø25.4 mm)	• Collet ø1/8" (CHK-3.175) : 1 pc. • Collet Nut (K-265) : 1 pc. • Wrench (12 x 14) : 2 pcs., (22 x 27) : 1 pc.	
AS81819P	NR-2551	ø0.98" (ø25 mm)		

*Do not exceed the allowable motor speed for the spindle.

Caution : Use the motor at motor speed less than maximum allowable speed or use the speed reducer. DO NOT exceed the allowable motor speed for the spindle and the reducer.

Product Code AS81826P SPEED REDUCER 1/4 ARG-H2504N

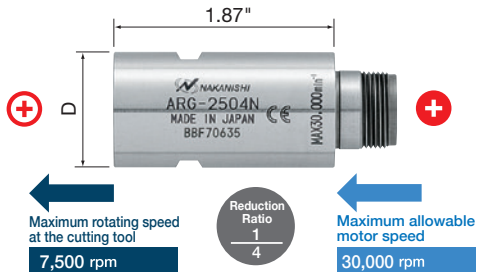

Maximum allowable motor speed 30,000 rpm

Maximum rotating speed at the cutting tool <Reduction Ratio : 1/4> 7,500 rpm

- Speed Reducing Mechanism ····· By planetary gear system
- Weight ····· 5.29 oz.

●If the speed reducer is connected between the motor and the spindle, it reduces the rotating speed and increases the torque while keeping the motor speed unchanged.

Speed Reducer D=ø1.0"(ø25.4 mm), ø0.98"(ø25 mm)

Product Code	Product Name	Outside Diameter	Speed Reduction Ratio	
AS81826P	ARG-H2504N	ø1.0" (ø25.4 mm)	Speed Reduction Ratio 1/4	
AS81822P	ARG-2504N	ø0.98" (ø25 mm)		

Product Code AS81828P SPEED REDUCER 1/16 ARG-H2516N

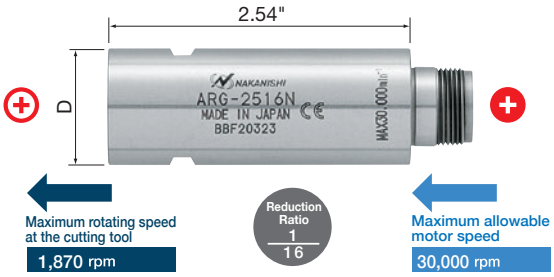

Maximum allowable motor speed 30,000 rpm

Maximum rotating speed at the cutting tool <Reduction Ratio : 1/16> 1,870 rpm

- Speed Reducing Mechanism ····· By planetary gear system
- Weight ····· 7.23 oz.

●If the speed reducer is connected between the motor and the spindle, it reduces the rotating speed and increases the torque while keeping the motor speed unchanged.

Speed Reducer D=ø1.0"(ø25.4 mm), ø0.98"(ø25 mm)

Product Code	Product Name	Outside Diameter	Speed Reduction Ratio	
AS81828P	ARG-H2516N	ø1.0" (ø25.4 mm)	Speed Reduction Ratio 1/16	
AS81824P	ARG-2516N	ø0.98" (ø25 mm)		

1
EmaxEVO
ESPERT
ROTUS
IMPULSE
PRESTO II
Sheenus ZERO
2
iSpeed3
E2000 ø1.0"/ø0.98"/ø0.897"
E3000 – One Piece
E3000 – Modular
ø1.18"
ø1.0"/ø0.98" ø0.897"
E3000 – 80,000rpm
E4000
3
MA
ø0.897"
ø1.0" ø0.98"
ø1.18"
MS
ø0.75" ø0.79"
ø0.87" ø0.91"
ø1.0" ø0.98"
4
HES
iSpeed5
HTS
HPS
PLANET
Xpeed
ABT
5
AIR LINE KIT
6
PARTS
7
TECHNICAL DATA
8
APPLICATION EXAMPLES
INDEX

Product Code 4502 AIR LINE KIT AL-M1202

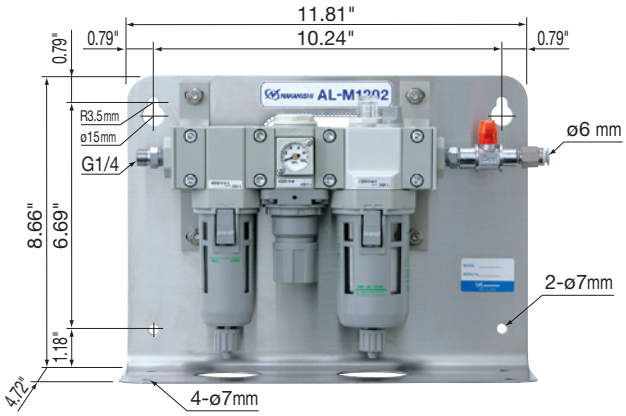

●The AL-M1202 provides simple, automatic conditioning of the air supplied to NAKANISHI Air Motors. The filter removes water and impure substances from the input air supply. The regulator maintains the proper air pressure, and the lubricator ensures proper oil flow to the motor and spindle. This Air Line Kit is wall mountable.

Air Line Kit (For ø6 mm Hose · **Filter Mesh 0.3 µm**)

Product Code	Product Name	Standard Equipment · Accessories	
4502	AL-M1202	• Air Filter • Air Regulator • Air Pressure Gauge • Lubricator • Air ON-OFF Valve • Hose for Piping (K-275) : 6 ft • Lubricating Oil (K-211) : 1 pc.	

Product Code 4503 AIR LINE KIT AL-M1203BS2

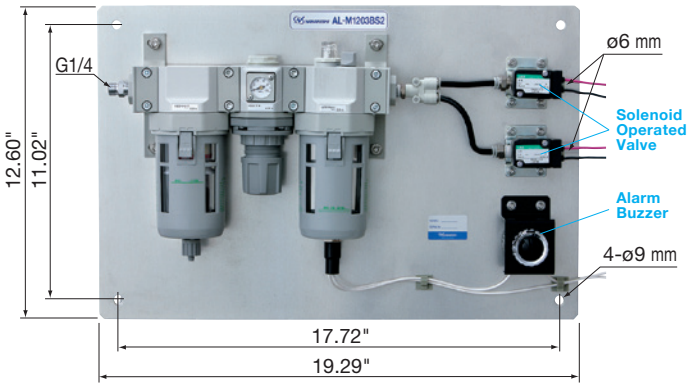

●The AL-M1203BS2 is equipped with 2 (DC+24V) Air Solenoids, a large capacity filter, large capacity oil reservoir, high flow regulator and a low oil level warning alarm, making this unit ideal for use on CNC machines. This Air Line Kit allows for the operation of 2 Air Motors.

Air Line Kit (For ø6 mm Hose · **Filter Mesh 0.3 µm**)

Product Code	Product Name	Standard Equipment · Accessories	
4503	AL-M1203 BS2	• Air Filter • Air Regulator • Air Pressure Gauge • Lubricator • Solenoid Valve (DC 24V) : 2 pcs. • Buzzer (DC 24V) • Hose for Piping (K-275) : 6 ft • Lubricating Oil (K-202) : 1 pc.	

LUBRICATING OIL

Lubricating Oil (4 oz.)

Product Code	Product Name	Product	
AA10478	K-211		

Lubricating Oil (32 oz.)

Product Code	Product Name	Product	
AA10480	K-202		

*Order by product code.

1
EmaxEVO
ESPERT
ROTUS
IMPULSE
PRESTO II
Sheenus ZERO
2
iSpeed3
E2000
ø1.0"/ø0.98"/ø0.897"
E3000
– One Piece
E3000
– Modular
ø1.18"
ø1.0"/ø0.98"
ø0.897"
E3000
– 80,000rpm
E4000
3
MA
ø0.897"
ø1.0"
ø0.98"
ø1.18"
MS
ø0.75"
ø0.79"
ø0.87"
ø0.91"
ø1.0"
ø0.98"
4
HES
iSpeed5
HTS
HPS
PLANET
Xpeed
ABT
5
AIR LINE KIT
6
PARTS
7
TECHNICAL DATA
8
APPLICATION EXAMPLES
INDEX

- **MA Series consists of 3 kinds of air motors, AM-3020R {19,000 rpm, 130W}, AM-3020RA {18,000 rpm, 125W}, enabling a wide variety of operations by the combination of various kinds of spindles. Higher torque is provided by connecting speed reducers.**

MA Series ø1.18"(ø30 mm) System Chart

- MA Series has been designed to operate smoothly at high speed for long continuous cutting and grinding by connecting an air line kit directly between the air compressor and the air motor. (Air Line Kit Refer to 3-p25 in detail)
- Air supply and exhaust air hoses are supplied with an air motor. Air supply hose is provided with metal fitting to connect to ø6 mm one-touch joint. Air exhaust hose is supplied with silencer.

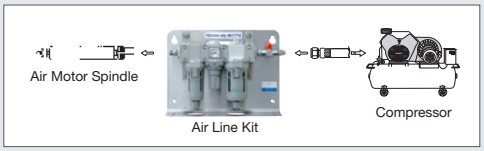

*May be connected between the motor and the spindle as the need of torque.
*(1/OO) indicates reduction ratio.
*Reduction Gears can be used only with NR-3060S, NR-453E, and NR-403E.

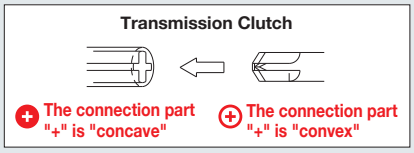

*Do not exceed the maximum motor speed recommendation for the spindles. Excess speed will dramatically reduce bearing life.

AM-3020R Torque-Speed Characteristics

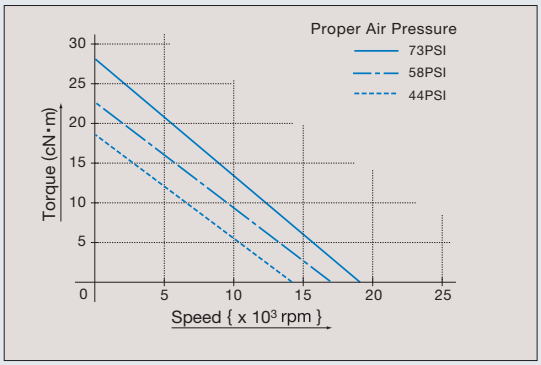

- **Ultra-precision vane type air motor.**
- **Rigid stainless steel (SUS416) outer housing.**

Product Code	AS11797	AIR MOTOR AM-3020R	(Forward Rotation)	130W	19,000 rpm
Product Code	AS11798	AIR MOTOR AM-3020L	(Reverse Rotation)		

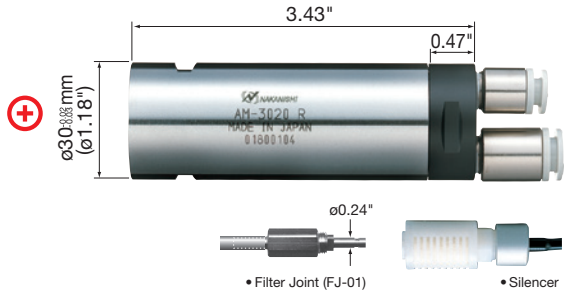

- Motor Speed ····· 19,000 rpm (73PSI)
- Max. Output Power ····· 130W
- Proper Air Pressure ····· 44~73PSI
- Air Consumption ····· 6.36CFM
- Motor Hose (Diameter / Length)
  Air Intake ····· ø4.0 (I.D.) x ø6.0 (O.D.) mm / 6 ft
  Exhaust Air ····· ø6.0 (I.D.) x ø8.0 (O.D.) mm / 3 ft
- Weight (w/o hose) ····· 10.51 oz.

● Ultra precision, compact, vane-type air motor provides high torque with small volume of air consumption. Withstands long continuous operation without heat generation. Silencer keeps noise to a minimum.

Air Motor (R=Forward, L=Reverse)

Product Code	Product Name	Standard Equipment · Accessories	
AS11797	AM-3020R	• Hose (K-215) : ø6 mm x 6 ft • Hose (K-256) : ø8 mm x 3 ft • Filter Joint (FJ-01) • Silencer (K-208) • Wrench (22 x 27) : 1 pc.	
AS11798	AM-3020L		

Product Code	AS11799	AIR MOTOR AM-3020RA	(Forward Rotation)	125W	18,000 rpm
Product Code	AS11800	AIR MOTOR AM-3020LA	(Reverse Rotation)		

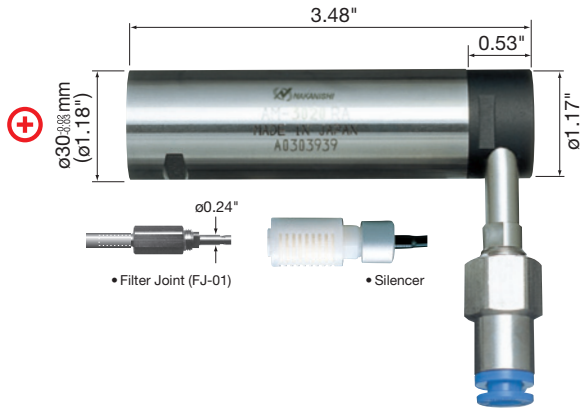

- Motor Speed ····· 18,000 rpm (73PSI)
- Max. Output Power ····· 125W
- Proper Air Pressure ····· 44~73PSI
- Air Consumption ····· 6.18CFM
- Motor Hose (Diameter / Length)
  Air Intake ····· ø4.0 (I.D.) x ø6.0 (O.D.) mm / 6 ft
  Exhaust Air ····· ø6.0 (I.D.) x ø8.0 (O.D.) mm / 3 ft
- Weight (w/o hose) ····· 11.96 oz.

● The installation space is reduced by installing the air intake and exhaust air hoses at 90° angle from the rear end of the motor.

90° Angle Type Air Motor (RA=Forward, LA=Reverse)

Product Code	Product Name	Standard Equipment · Accessories	
AS11799	AM-3020RA	• Hose (K-215) : ø6 mm x 6 ft • Hose (K-256) : ø8 mm x 3 ft • Filter Joint (FJ-01) • Silencer (K-208) • Wrench (22 x 27) : 1 pc.	
AS11800	AM-3020LA		

Torque type attachment used with ø1/4" chuck diameter as standard and nicely fits in hand-grip.

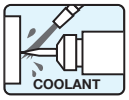

MA Series can be used in conjunction with water or oil based coolants.

Product Code 7590 SPINDLE NR-3060S (Ceramic Bearing) 60,000 rpm

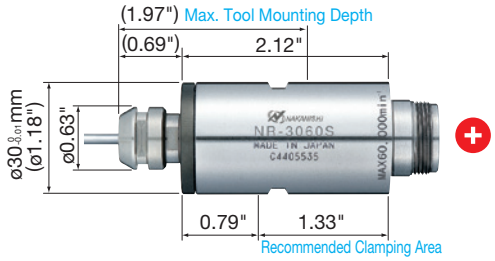

- Allowable Motor Speed ····· 60,000 rpm
- Spindle Accuracy ····· Within 1 µm
- Standard Size Collet (CHK-3.175) ····· ø1/8"
- Weight ····· 9.17 oz.

< Optional >

- Collet (CHK-[][]) ····· ø0.5 mm~ø6.35 mm (See Page 6-p3 for details)
- Collet Nut (K-265) ····· For Collet (CHK)
- Metal Saw Arbor (KCH-03) ····· For ø0.24" (I.D.) x ø1.18" (O.D.)
- Grindstone Arbor (AGM-03) ···· For grinding wheel with I.D. of ø5 mm
- Grindstone Flange (EGF-19) ····· ø19.05 (I.D.) x ø40 (O.D.) x 7 (W) mm

● This spindle can be used for small-diameter milling, drilling, slitting, chamfering, grinding, etc.

Spindle

Product Code	Product Name	Standard Equipment · Accessories	
7590	NR-3060S	• Collet ø1/8" (CHK-3.175) • Collet Nut (K-265) : 1 pc. • Wrench (12 x 14) : 2 pcs., (22 x 27) : 1 pc.	

Product Code ASE1566 SPINDLE NR-453E (Ceramic Bearing) 50,000 rpm



- Allowable Motor Speed ····· 50,000 rpm
- Spindle Accuracy ····· Within 1 µm
- Standard Size Collet (CHK-3.175) ····· ø1/8"
- Weight ····· 15.52 oz.

< Optional >

- Collet (CHK-[][]) ····· ø0.5 mm~ø6.35 mm (See Page 6-p3 for details)
- Collet Nut (K-265) ····· For Collet (CHK)
- Metal Saw Arbor (KCH-03) ····· For ø0.24" (I.D.) x ø1.18" (O.D.)
- Grindstone Arbor (AGM-03) ···· For grinding wheel with I.D. of ø5 mm
- Grindstone Flange (EGF-19) ····· ø19.05 (I.D.) x ø40 (O.D.) x 7 (W) mm

● This spindle can be used for small-diameter milling, drilling, slitting, chamfering, grinding, etc.

Spindle

Product Code	Product Name	Standard Equipment · Accessories	
ASE1566	NR-453E	• Collet ø1/8" (CHK-3.175) • Collet Nut (K-265) : 1 pc. • Wrench (12 x 14) : 2 pcs., (22 x 27) : 1 pc.	

*Do not exceed the allowable motor speed for the spindle.

COOLANT

Product Code ASE1514 SPINDLE NR-403E 40,000 rpm



- Allowable Motor Speed ····· 40,000 rpm
- Spindle Accuracy ····· Within 1 µm
- Standard Size Collet (CHK-3.175) ····· ø1/8"
- Weight ····· 15.52 oz.

< Optional >

- Collet (CHK-[][]) ····· ø0.5 mm~ø6.35 mm (See Page 6-p3 for details)
- Collet Nut (K-265) ····· For Collet (CHK)
- Metal Saw Arbor (KCH-03) ····· For ø0.24" (I.D.) x ø1.18" (O.D.)
- Grindstone Arbor (AGM-03) ··· For grinding wheel with I.D. of ø5 mm
- Grindstone Flange (EGF-19) ····· ø19.05 (I.D.) x ø40 (O.D.) x 7 (W) mm

● This spindle can be used for small-diameter milling, drilling, slitting, chamfering, grinding, etc.

Spindle

Product Code	Product Name	Standard Equipment · Accessories	
ASE1514	NR-403E	• Collet ø1/8" (CHK-3.175) • Collet Nut (K-265) : 1 pc. • Wrench (12 x 14) : 2 pcs., (22 x 27) : 1 pc.	

*Do not exceed the allowable motor speed for the spindle.

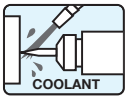

Caution : Use the motor at motor speed less than maximum allowable speed or use the speed reducer. DO NOT exceed the allowable motor speed for the spindle and the reducer.

Product Code ASE1559 — 90°ANGLE SPINDLE RAS-151E

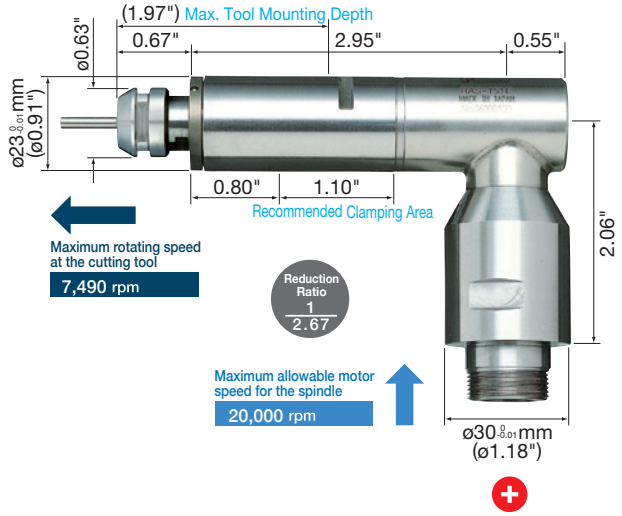

Maximum allowable motor speed for the spindle **20,000 rpm**

Maximum rotating speed at the cutting tool <Reduction Ratio : 1/2.67> **7,490 rpm**

- Spindle Accuracy ····· Within 2 µm
- Standard Size Collet (CHK-3.175) ····· ø1/8"
- Weight ····· 14.57 oz.

< Optional >

- Collet (CHK-▯▯) ····· ø0.5 mm~ø6.35 mm (See Page 6-p3 for details)
- Collet Nut (K-265) ····· For Collet (CHK)
- Metal Saw Arbor (KCH-03) ····· For ø0.24" (I.D.) x ø1.18" (O.D.)
- Grindstone Arbor (AGM-03)···· For grinding wheel with I.D. of ø5 mm

●90˚Angle Type Spindle can use up to a ø1/4"(ø6.35 mm) collet and is suitable for installation where space restrictions exist.

90˚ Angle Spindle

Product Code	Product Name	Standard Equipment · Accessories	
ASE1559	RAS-151E	• Collet ø1/8" (CHK-3.175) • Collet Nut (K-265) : 1 pc. • Wrench (12 x 14) : 2 pcs., (22 x 27) : 1 pc.	

Product Code ASE1579 — 90° ANGLE SPINDLE RAX-271E (Speed Reduction Ratio 1/1.5)

Product Code ASE1576 — 90° ANGLE SPINDLE RAX-71E (Speed Reduction Ratio 1/6)

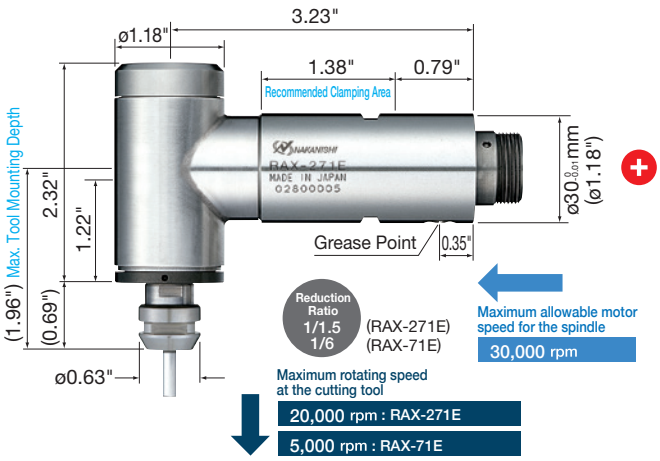

Maximum allowable motor speed for the spindle **30,000 rpm**

Maximum rotating speed at the cutting tool
RAX-271E <Reduction Ratio : 1/1.5> **20,000 rpm**
RAX-71E <Reduction Ratio : 1/6> **5,000 rpm**

- Spindle Accuracy ····· Within 2 µm
- Standard Size Collet (CHK-3.175) ····· ø1/8"
- Weight ····· 1 lb. 4.46 oz.

< Optional >

- Collet (CHK-▯▯) ····· ø0.5 mm~ø6.35 mm (See Page 6-p3 for details)
- Collet Nut (K-265) ····· For Collet (CHK)
- Metal Saw Arbor (KCH-03) ····· For ø0.24" (I.D.) x ø1.18" (O.D.)
- Grindstone Arbor (AGM-03)···· For grinding wheel with I.D. of ø5 mm

●This spindle is capable of working on corners difficult to work with straight type, drilling on side faces and milling of grooves.

90˚ Angle Spindle

Product Code	Product Name	Standard Equipment · Accessories	
ASE1579	RAX-271E	• Collet ø1/8" (CHK-3.175) • Collet Nut (K-265) : 1 pc. • Wrench (12 x 14) : 2 pcs., (22 x 27) : 1 pc. • Gear Grease (10mL) • Grease Nipple : 1 pc.	
ASE1576	RAX-71E		

To extend the life expectancy of the Speed Reducer, inject grease every 70 to 100 hours. Grease injection prevents friction of the internal gears as well as heat generation. Adding grease also prevents the degradation of the existing grease in the reducer. Please maintain a reducer grease maintenance program.

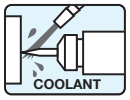

Caution : Use the motor at motor speed less than maximum allowable speed or use the speed reducer. DO NOT exceed the allowable motor speed for the spindle and the reducer.

Product Code ASE1505 — 90°ANGLE SPINDLE RA-151E

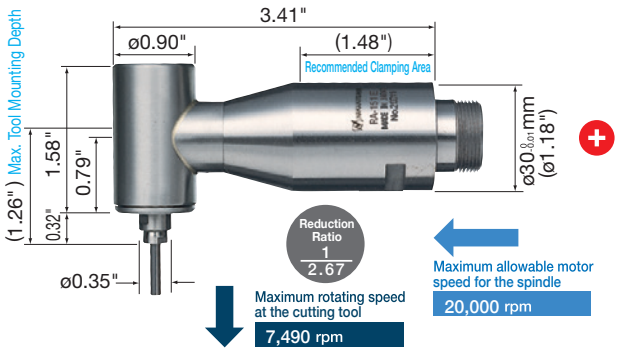

● This spindle is capable of working on corners difficult to work or unfit for working with straight type, drilling on side face and, slitting of aluminum, brass, etc. with the use of ø1.18"(ø30 mm) Metal Saw.

Maximum allowable motor speed for the spindle 20,000 rpm

Maximum rotating speed at the cutting tool <Reduction Ratio : 1/2.67> 7,490 rpm

- Standard Size Collet (CH8-3.175) ····· ø1/8"
- Weight ····· 13.58 oz.

< Optional >

- Collet (CH8-[][]) ····· ø0.8 mm~ø3.175 mm
  (See Page 6-p5 for details)
- Metal Saw Arbor (KCH-02) ····· For ø0.24" (I.D.) x ø1.18" (O.D.)

90˚ Angle Spindle

Product Code	Product Name	Standard Equipment · Accessories	
ASE1505	RA-151E	• Collet ø1/8" (CH8-3.175) : 1 pc. • Wrench (7 x 5.5), (8 x 5), (22 x 27) : 1 pc. each	

Product Code ASE1506 — 90°ANGLE SPINDLE RA-271E

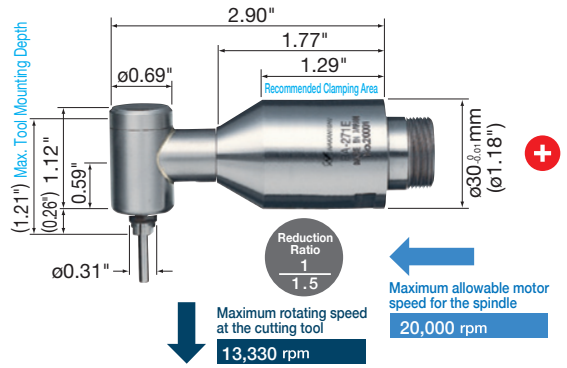

● This spindle can be used for working on corners difficult to work or unfit for working with straight type, drilling on side face, etc.

Maximum allowable motor speed for the spindle 20,000 rpm

Maximum rotating speed at the cutting tool <Reduction Ratio : 1/1.5> 13,330 rpm

- Standard Size Collet (CHS-3.175) ····· ø1/8"
- Weight ····· 8.47 oz.

< Optional >

- Collet (CHS-[][]) ····· ø0.8 mm~ø3.175 mm
  (See Page 6-p4 for details)

90˚ Angle Spindle

Product Code	Product Name	Standard Equipment · Accessories	
ASE1506	RA-271E	• Collet ø1/8" (CHS-3.175) : 1 pc. • Wrench (7 x 5.1), (8 x 5), (22 x 27) : 1 pc. each	

Caution : Use the motor at motor speed less than maximum allowable speed or use the speed reducer. DO NOT exceed the allowable motor speed for the spindle and the reducer.

Product Code ASE1507 SPEED REDUCER 1/4 ARG-011E

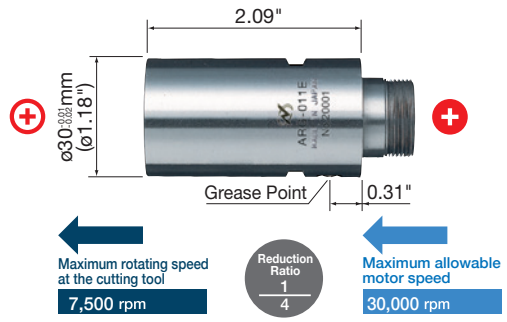

- If the speed reducer is connected between the motor and the spindle, it reduces the rotating speed and increases the torque while keeping the motor speed unchanged.

Maximum allowable motor speed 30,000 rpm

Maximum rotating speed at the cutting tool <Reduction Ratio : 1/4> 7,500 rpm

- Speed Reducing Mechanism ····· By planetary gear system
- Speed Reduction Ratio ····· 1/4
- Weight ····· 8.54 oz.

Speed Reducer 1/4

Product Code	Product Name	Standard Equipment · Accessories	
ASE1507	ARG-011E	• Gear Grease (10mL) • Grease Nipple : 1 pc.	

To extend the life expectancy of the Speed Reducer, inject grease every 70 to 100 hours. Grease injection prevents friction of the internal gears as well as heat generation. Adding grease also prevents the degradation of the existing grease in the reducer. Please maintain a reducer grease maintenance program.

Product Code ASE1508 SPEED REDUCER 1/16 ARG-021E

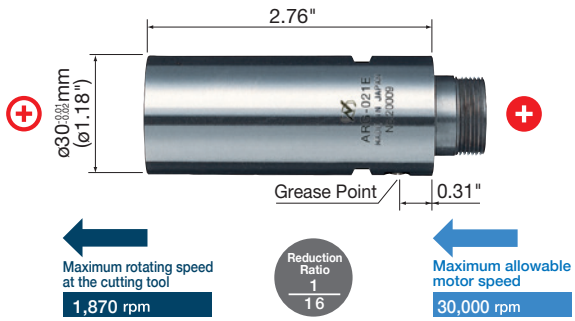

- If the speed reducer is connected between the motor and the spindle, it reduces the rotating speed and increases the torque while keeping the motor speed unchanged.

Maximum allowable motor speed 30,000 rpm

Maximum rotating speed at the cutting tool <Reduction Ratio : 1/16> 1,870 rpm

- Speed Reducing Mechanism ····· By planetary gear system
- Speed Reduction Ratio ····· 1/16
- Weight ····· 11.46 oz.

Speed Reducer 1/16

Product Code	Product Name	Standard Equipment · Accessories	
ASE1508	ARG-021E	• Gear Grease (10mL) • Grease Nipple : 1 pc.	

To extend the life expectancy of the Speed Reducer, inject grease every 70 to 100 hours. Grease injection prevents friction of the internal gears as well as heat generation. Adding grease also prevents the degradation of the existing grease in the reducer. Please maintain a reducer grease maintenance program.

Product Code 4502 AIR LINE KIT AL-M1202

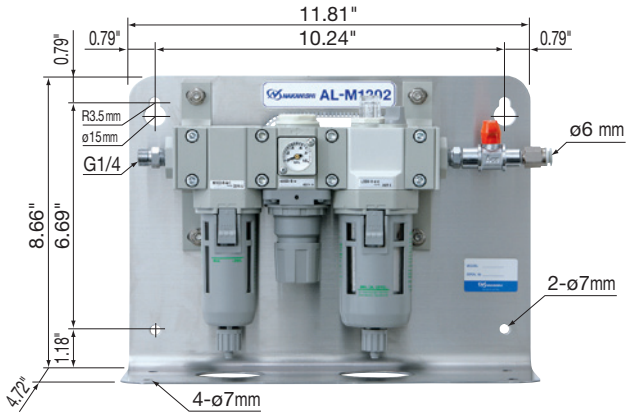

●The AL-M1202 provides simple, automatic conditioning of the air supplied to NAKANISHI Air Motors. The filter removes water and impure substances from the input air supply. The regulator maintains the proper air pressure, and the lubricator ensures proper oil flow to the motor and spindle. This Air Line Kit is wall mountable.

Air Line Kit (For ø6 mm Hose · **Filter Mesh 0.3 µm**)

Product Code	Product Name	Standard Equipment · Accessories	
4502	AL-M1202	• Air Filter • Air Regulator • Air Pressure Gauge • Lubricator • Air ON-OFF Valve • Hose for Piping (K-275) : 6 ft • Lubricating Oil (K-211) : 1 pc.	

Product Code 4503 AIR LINE KIT AL-M1203BS2

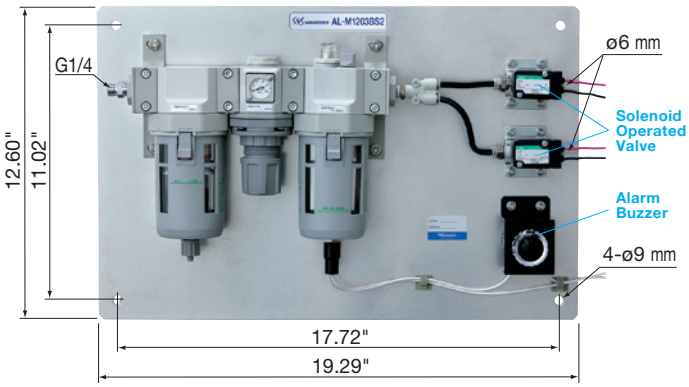

●The AL-M1203BS2 is equipped with 2 (DC+24V) Air Solenoids, a large capacity filter, large capacity oil reservoir, high flow regulator and a low oil level warning alarm, making this unit ideal for use on CNC machines. This Air Line Kit allows for the operation of 2 Air Motors.

Air Line Kit (For ø6 mm Hose · **Filter Mesh 0.3 µm**)

Product Code	Product Name	Standard Equipment · Accessories	
4503	AL-M1203 BS2	• Air Filter • Air Regulator • Air Pressure Gauge • Lubricator • Solenoid Valve (DC 24V) : 2 pcs. • Buzzer (DC 24V) • Hose for Piping (K-275) : 6 ft • Lubricating Oil (K-202) : 1 pc.	

LUBRICATING OIL

Lubricating Oil (4 oz.)

Product Code	Product Name	Product	
AA10478	K-211		

Lubricating Oil (32 oz.)

Product Code	Product Name	Product	Price
AA10480	K-202		

1 EmaxEVO ESPERT ROTUS IMPULSE PRESTO II Sheenus ZERO
2 iSpeed3 E2000 ø1.0"/ø0.98"/ø0.897" E3000 – One Piece E3000 – Modular ø1.18" ø1.0"/ø0.98" ø0.897" E3000 – 80,000rpm E4000
3 MA ø0.897" ø1.0" ø0.98" ø1.18" MS ø0.75" ø0.79" ø0.87" ø0.91" ø1.0" ø0.98"
4 HES iSpeed5 HTS HPS PLANET Xpeed ABT
5 AIR LINE KIT
6 PARTS
7 TECHNICAL DATA
8 APPLICATION EXAMPLES
INDEX

1
EmaxEVO
ESPERT
ROTUS
IMPULSE
PRESTO II
Sheenus ZERO
2
iSpeed3
E2000
ø1.0"/ø0.98"/ø0.897"
E3000
– One Piece
E3000
– Modular
ø1.18"
ø1.0"/ø0.98"
ø0.897"
E3000
– 80,000rpm
E4000
3
MA
ø0.897"
ø1.0"
ø0.98"
ø1.18"
MS
ø0.75"
ø0.79"
ø0.87"
ø0.91"
ø1.0"
ø0.98"
4
HES
iSpeed5
HTS
HPS
PLANET
Xpeed
ABT
5
AIR LINE KIT
6
PARTS
7
TECHNICAL DATA
8
APPLICATION EXAMPLES
INDEX

One Piece Type Spindle

- Shorter overall length suitable for CNC lathes and special purpose machines.
- Hardened and precision ground for high rigidity & excellent durability.
- External one-piece housing includes both the motor & spindle.



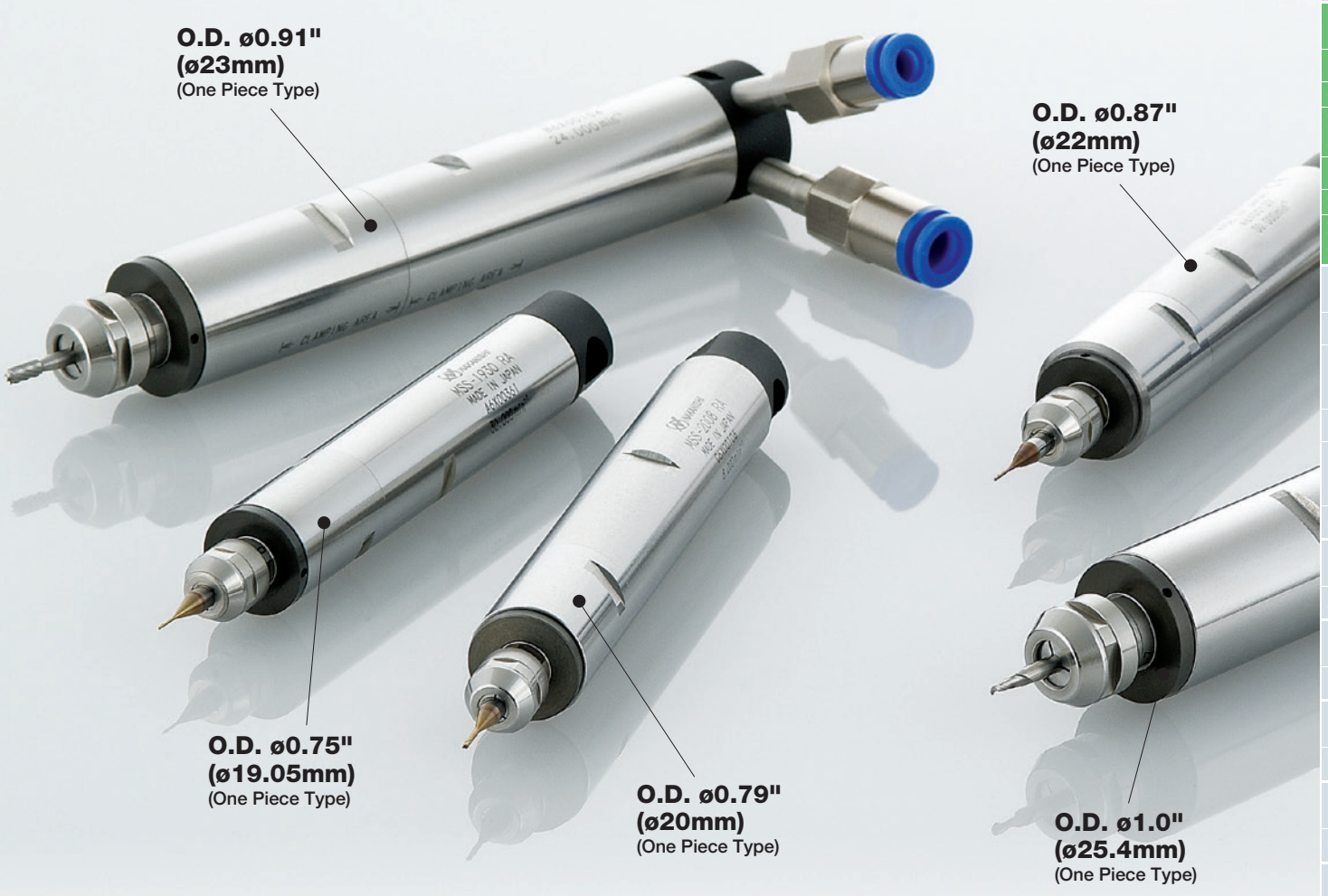

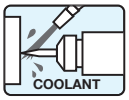

MS Series can be used in conjunction with water or oil based coolants.

1
EmaxEVO
ESPERT
ROTUS
IMPULSE
PRESTO II
Sheenus ZERO
2
iSpeed3
E2000 ø1.0"/ø0.98"/ø0.897"
E3000 – One Piece
E3000 – Modular
ø1.18"
ø1.0"/ø0.98" ø0.897"
E3000 – 80,000rpm
E4000
3
MA
ø0.897"
ø1.0" ø0.98"
ø1.18"
MS
ø0.75" ø0.79"
ø0.87" ø0.91"
ø1.0" ø0.98"
4
HES
iSpeed5
HTS
HPS
PLANET
Xpeed
ABT
5
AIR LINE KIT
6
PARTS
7
TECHNICAL DATA
8
APPLICATION EXAMPLES
INDEX

MS Series System Chart

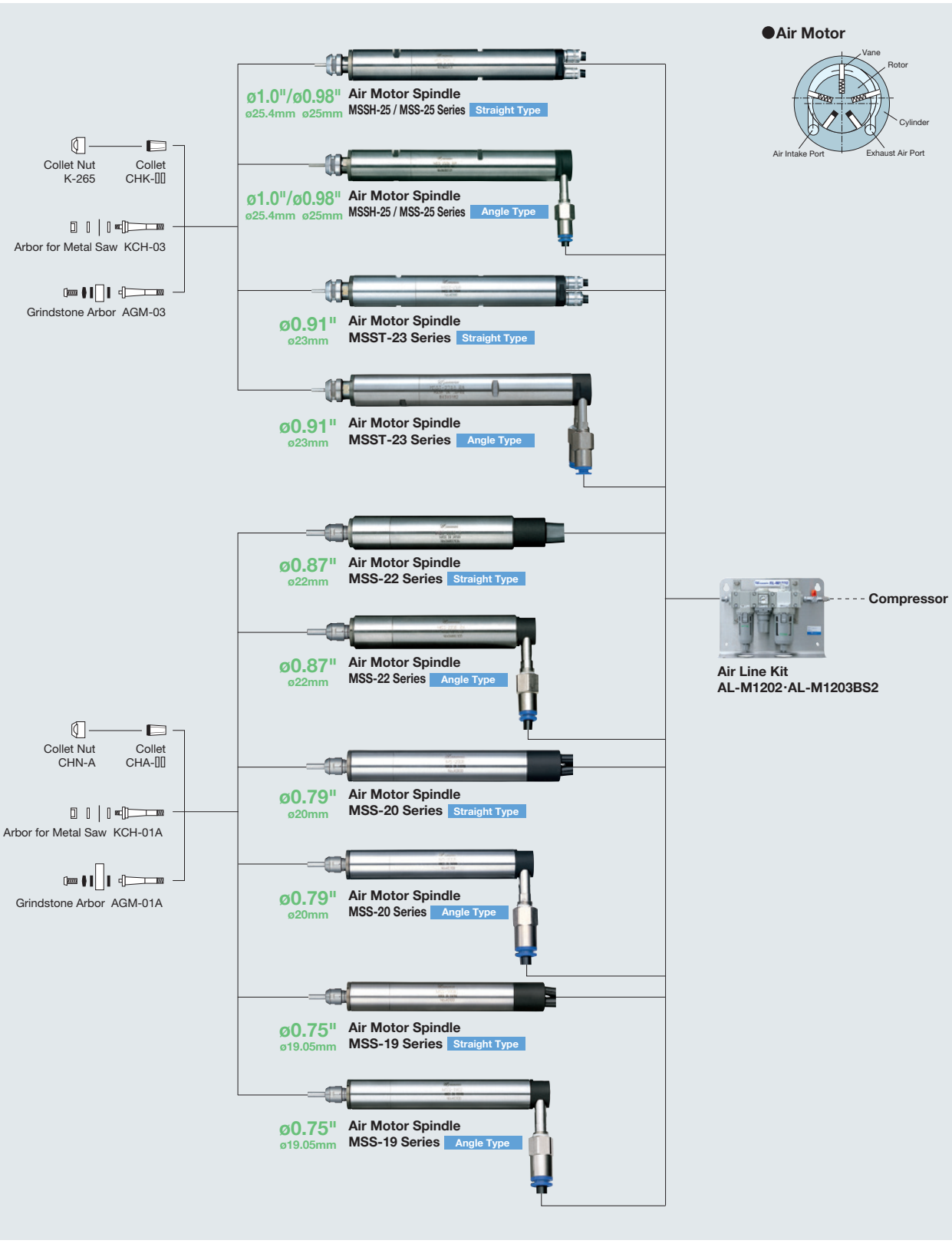

Configuration & Characteristics

Model Code Example

• Straight Type
[1] SERIES CODE
[2] OUTSIDE DIAMETER
[3] SPEED
[4] R=FORWARD (Right)

MSS [1] 19 [2] 08 [3] R [4]

• 90˚ Angle Type
[1] SERIES CODE
[2] OUTSIDE DIAMETER
[3] SPEED
[4] R=FORWARD (Right)
[5] CODE FOR 90˚ ANGLE TYPE

MSS [1] 19 [2] 08 [3] R [4] A [5]

●The design of NAKANISHI's air motors gives the highest output power in this small spindle class.

• Air Motor

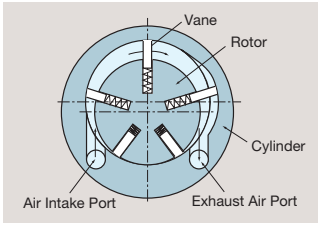

The rotor of the air motor rotates off center in the cylinder. The vanes are pushed by compressed air and this rotates the rotor. This small air motor produces high torque making it suitable for small diameter drilling, milling, slitting and grinding.

●Silencer

By utilizing a silencer on the exhaust air tubing the noise generated by the motor or turbine is greatly reduced.

●Speed Reduction System

A planetary gear speed reduction system is incorporated in some of the MS Series motor/spindles. The speed reduction ratio is either 1/4 or 1/16. This maintains a high motor speed while giving very high torque, low speed rotation at the spindle. By carefully selecting only the highest grade materials for the planetary gear reducers we can ensure high load capacity.



1/4 · 1/16 :
Planetary Gear System

●Outer Housing Material

The outer housing is (SUS416) precision ground to +0/-0.01mm.

●Configuration

Either straight or 90˚ air connection types are available depending on the mounting and plumbing restrictions in your installation.

●Very high spindle accuracy makes ultra-precision machining possible.

• Spindle Accuracy

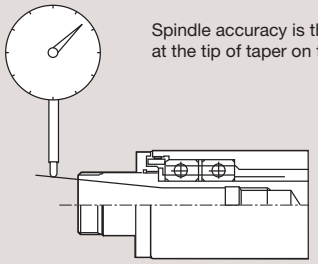

Spindle accuracy is the spindle runout as measured at the tip of taper on the ID of the spindle.

●MS Series Set-Up Chart
(Air line kit is required for operation)

The MS Series spindles are specifically designed for long term continuous use in high speed machining applications such as small diameter drilling, milling, slitting and grinding applications.

It runs by connecting the air line kit to Compressor [1] directly. Stably adjusted air pressure is supplied through Air Regulator [2] that also controls the speed of spindle. Air is purified by Air Filter [3] and Lubricator [4] supplies lubricant automatically to the air spindle while in operation. Switch [5] controls the operation of air spindle ON and OFF.

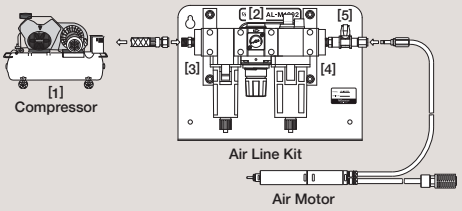

Air Line Kit Refer to 3-p34

●Installation of 90˚Angle Type

● MSS · MSST · MSSH series angle (RA) type drive air and exhaust air pipes can be removed enabling the motor spindle installed through the front of a holder with backside restriction as shown in the illustration.

Installation
[1] Remove Intake and Exhaust Air Pipes from motor spindle.
[2] Insert the straight spindle from the front side of holder and fix it.
[3] Mount the intake and exhaust air pipes to the spindle fixed on the holder and attach a hose to the quick disconnect joint.
・Urethane hose of 6 x 4 for intake air and 8 x 5 for exhaust air can be installed.

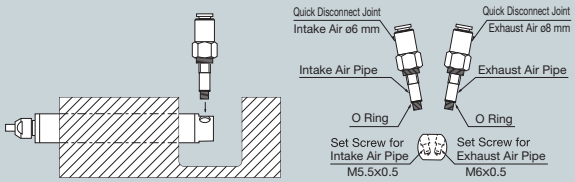

*The motor speed of 90˚ Angle air connection type motor / spindles are 10% less than that of the straight type.

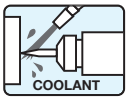

MSS-19 · MSS-20 SERIES STRAIGHT · 90° ANGLE TYPE 30,000 · 8,000 · 2,000 rpm

● STRAIGHT TYPE (R)

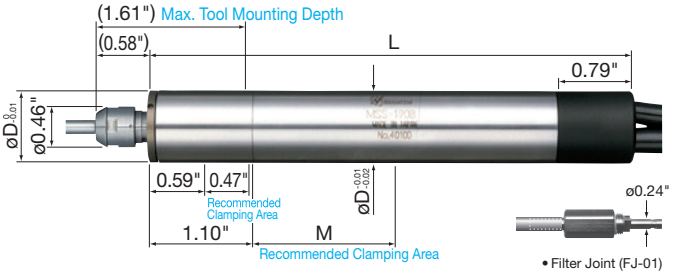

- Proper Air Pressure ····· 44~73PSI
- Air Consumption ····· 5.47CFM
- Spindle Accuracy ····· Within 2 μm
- Motor Hose (Diameter / Length)
  - [R-type] Air Intake ····· ø3.7 (I.D.) x ø5.7 (O.D.) mm / 6 ft
  - Exhaust Air ····· ø5.0 (I.D.) x ø6.5 (O.D.) mm / 3 ft
  - [RA-type] Air Intake ····· ø4.0 (I.D.) x ø6.0 (O.D.) mm / 6 ft
  - Exhaust Air ····· ø5.5 (I.D.) x ø8.0 (O.D.) mm / 3 ft
- Standard Size Collet (CHA-3.175) ····· ø1/8"

< Optional >

- Collet (CHA-[][]) ····· ø0.5 mm~ø4.0 mm (See Page 6-p2 for details)
- Collet Nut (CHN-A) ····· For Collet (CHA)
- Metal Saw Arbor (KCH-01A) ···· For ø0.24" (I.D.) x ø1.18" (O.D.)
- Grindstone Arbor (AGM-01A) ··· For grinding wheel with I.D. of ø5 mm

● 90° ANGLE TYPE (RA)

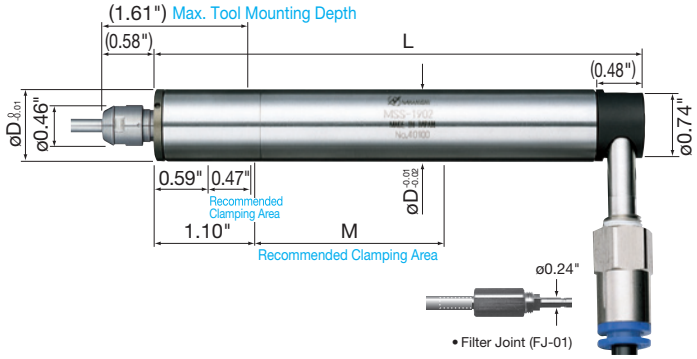

Caution : Two recommended clamp areas are laser-marked on the spindle. Select one of them for clamping, and do not clamp both areas.

MSS-19 · MSS-20 SERIES Torque-Speed Characteristics

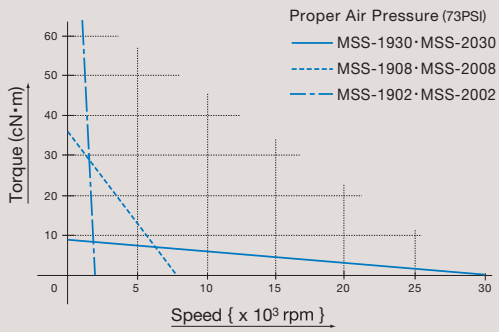

MSS-19 Series D = ø0.75"(ø19.05 mm)		MSS-20 Series D = ø0.79"(ø20 mm)		**30,000 rpm** (73PSI)						
Product Code	Product Name	Product Code	Product Name	Shape	Rotating Direction	Max. Output	Max. Torque	Length	M	Weight (MSS-19 / MSS-20)
AS91676	MSS-1930R	AS41710	MSS-2030R	Straight	FWD. (CW)	72W	9.2 cN · m	4.37"	0.91"	6.03 oz. / 6.70 oz.
AS91678	MSS-1930RA	AS41712	MSS-2030RA	90° Angle				4.06"		7.73 oz. / 8.43 oz.
				8,000 rpm (73PSI) **1/4 Speed Reduction**						
Product Code	Product Name	Product Code	Product Name	Shape	Rotating Direction	Max. Output	Max. Torque	Length	M	Weight (MSS-19 / MSS-20)
AS41601	MSS-1908R	AS41609	MSS-2008R	Straight	FWD. (CW)	72W	36 cN · m	4.99"	1.54"	7.13 oz. / 7.94 oz.
AS41603	MSS-1908RA	AS41611	MSS-2008RA	90° Angle				4.69"		8.82 oz. / 9.67 oz.
				2,000 rpm (73PSI) **1/16 Speed Reduction**						
Product Code	Product Name	Product Code	Product Name	Shape	Rotating Direction	Max. Output	Max. Torque	Length	M	Weight (MSS-19 / MSS-20)
AS41605	MSS-1902R	AS41613	MSS-2002R	Straight	FWD. (CW)	72W	141 cN · m	5.55"	2.09"	7.62 oz. / 8.50 oz.
AS41607	MSS-1902RA	AS41615	MSS-2002RA	90° Angle				5.24"		9.31 oz. / 10.23 oz.

Standard Equipment · Accessories
• Collet ø1/8" (CHA-3.175) : 1 pc. • Collet Nut (CHN-A) • Wrench (8 x 5), (9 x 11) : 1 pc. each • Hose (K-221 : R type) : 6 ft • Hose (K-215 : RA type) : ø6 mm x 6 ft • Hose (K-216 : RA type) : ø8 mm x 3 ft • Filter Joint (FJ-01) • Silencer (K-209 : R type), (K-208 : RA type)

*Refer to Page 3-p29 for mounting instructions for the 90° Angle Type.

COOLANT

MSS-22 SERIES STRAIGHT · 90° ANGLE TYPE 30,000 · 8,000 · 2,000 rpm

● STRAIGHT TYPE (R)

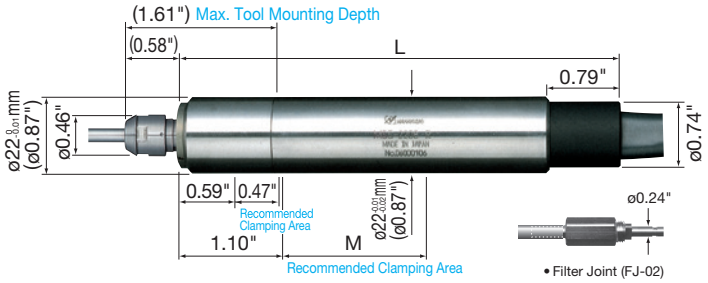

- Proper Air Pressure ····· 44~73PSI
- Air Consumption ····· 5.47CFM
- Spindle Accuracy ····· Within 2 µm
- Motor Hose (Diameter / Length)
  - [R-type] Air Intake ····· ø3.7 (I.D.) x ø5.7 (O.D.) mm / 6 ft
  - Exhaust Air ····· ø5.0 (I.D.) x ø6.5 (O.D.) mm / 3 ft
  - [RA-type] Air Intake ····· ø4.0 (I.D.) x ø6.0 (O.D.) mm / 6 ft
  - Exhaust Air ····· ø5.5 (I.D.) x ø8.0 (O.D.) mm / 3 ft
- Standard Size Collet (CHA-3.175) ····· ø1/8"

< Optional >

- Collet (CHA-[][]) ····· ø0.5 mm~ø4.0 mm (See Page 6-p2 for details)
- Collet Nut (CHN-A) ····· For Collet (CHA)
- Metal Saw Arbor (KCH-01A) ···· For ø0.24" (I.D.) x ø1.18" (O.D.)
- Grindstone Arbor (AGM-01A) ··· For grinding wheel with I.D. of ø5 mm

● 90° ANGLE TYPE (RA)

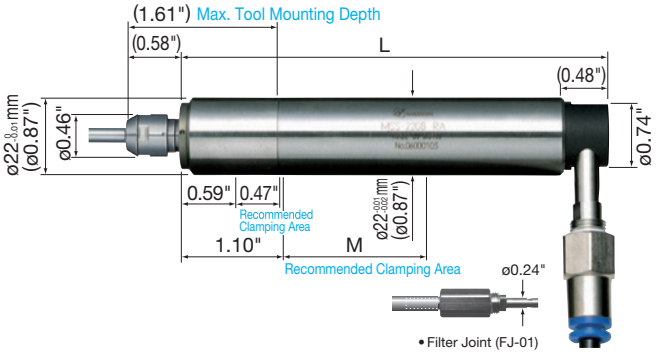

Caution : Two recommended clamp areas are laser-marked on the spindle. Select one of them for clamping, and do not clamp both areas.

MSS-22 SERIES Torque-Speed Characteristics

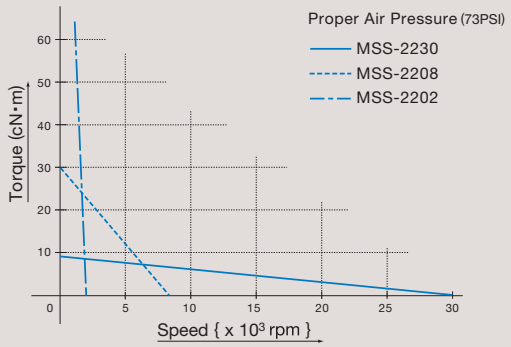

30,000 rpm (73PSI)

Product Code	Product Name	Shape	Rotating Direction	Max. Output	Max. Torque	Length	M	Weight	
AS91710	MSS-2230R	Straight	FWD. (CW)	72W	9.2 cN · m	4.37"	0.91"	8.18 oz.	
AS91712	MSS-2230RA	90° Angle				4.06"		9.88 oz.	

8,000 rpm (73PSI) **1/4 Speed Reduction**

Product Code	Product Name	Shape	Rotating Direction	Max. Output	Max. Torque	Length	M	Weight	
AS81680	MSS-2208R	Straight	FWD. (CW)	72W	36 cN · m	4.99"	1.54"	9.70 oz.	
AS81682	MSS-2208RA	90° Angle				4.69"		11.39 oz.	

2,000 rpm (73PSI) **1/16 Speed Reduction**

Product Code	Product Name	Shape	Rotating Direction	Max. Output	Max. Torque	Length	M	Weight	
AS81684	MSS-2202R	Straight	FWD. (CW)	72W	141 cN · m	5.55"	2.09"	10.23 oz.	
AS81686	MSS-2202RA	90° Angle				5.24"		11.92 oz.	

Standard Equipment · Accessories
• Collet ø1/8" (CHA-3.175) : 1 pc. • Collet Nut (CHN-A) • Wrench (8 x 5), (9 x 11) : 1 pc. each • Hose (K-221 : R type) : 6 ft • Hose (K-215 : RA type) : ø6 mm x 6 ft • Hose (K-216 : RA type) : ø8 mm x 3 ft • Filter Joint (FJ-02 : R type), (FJ-01 : RA type) • Silencer (K-209 : R type), (K-208 : RA type)

COOLANT

MSST-23 SERIES STRAIGHT · 90° ANGLE TYPE 30,000 · 8,000 · 2,000 rpm

● STRAIGHT TYPE (R)

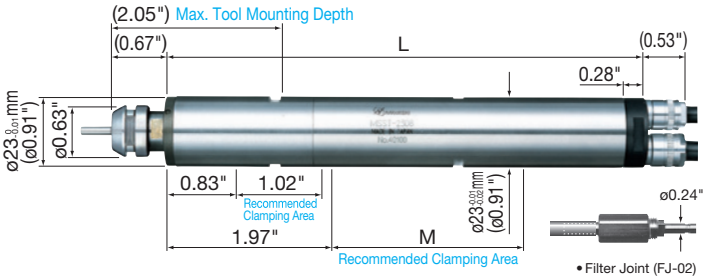

● 90° ANGLE TYPE (RA)

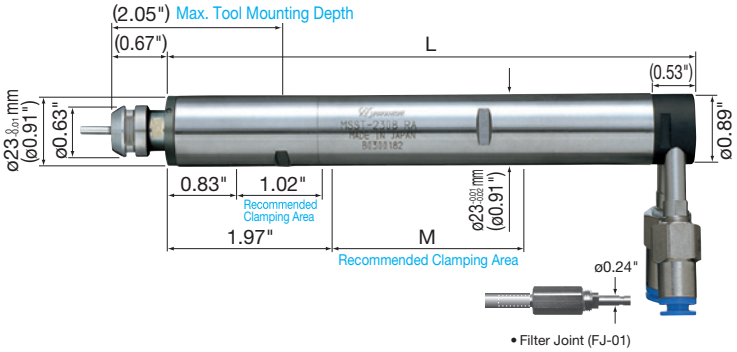

- Proper Air Pressure ····· 44~73PSI
- Air Consumption (R-type) : ····· 6.71CFM
  (RA-type) : ····· 6.00CFM
- Spindle Accuracy ····· Within 2 µm
- Motor Hose (Diameter / Length)
  [R-type] Air Intake ····· ø4.5 (I.D.) x ø6.7 (O.D.) mm / 6 ft
  Exhaust Air ····· ø5.5 (I.D.) x ø7.5 (O.D.) mm / 3 ft
  [RA-type] Air Intake ····· ø4.0 (I.D.) x ø6.0 (O.D.) mm / 6 ft
  Exhaust Air ····· ø5.5 (I.D.) x ø8.0 (O.D.) mm / 3 ft
- Standard Size Collet (CHK-3.175) ····· ø1/8"

< Optional >

- Collet (CHK-[][]) ····· ø0.5 mm~ø6.35 mm
  (See Page 6-p3 for details)
- Collet Nut (K-265) ····· For Collet (CHK)
- Metal Saw Arbor (KCH-03) ····· For ø0.24" (I.D.) x ø1.18" (O.D.)
- Grindstone Arbor (AGM-03) ··· For grinding wheel with I.D. of ø5 mm

MSST-23 SERIES Torque-Speed Characteristics

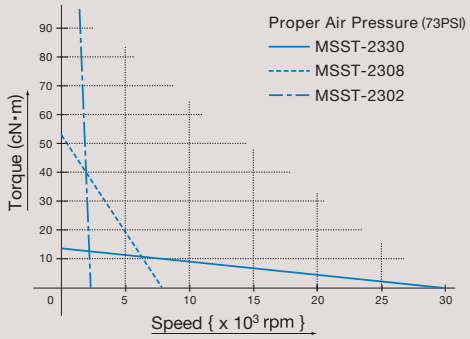

Caution : Two recommended clamp areas are laser-marked on the spindle. Select one of them for clamping, and do not clamp both areas.

R : 30,000 rpm (73PSI) / **RA : 27,000 rpm** (73PSI)

Product Code	Product Name	Shape	Rotating Direction	Max. Output	Max. Torque	Length	M	Weight	
AS41637	MSST-2330R	Straight	FWD. (CW)	108W	13.7 cN · m	5.01"	0.98"	11.57 oz.	
AS41639	MSST-2330RA	90° Angle				5.27"		13.02 oz.	

R : 8,000 rpm (73PSI) / **RA : 7,200 rpm** (73PSI) **1/4 Speed Reduction**

Product Code	Product Name	Shape	Rotating Direction	Max. Output	Max. Torque	Length	M	Weight	
AS41645	MSST-2308R	Straight	FWD. (CW)	108W	52 cN · m	6.30"	2.28"	14.64 oz.	
AS41647	MSST-2308RA	90° Angle				6.56"		16.08 oz.	

R : 2,000 rpm (73PSI) / **RA : 1,900 rpm** (73PSI) **1/16 Speed Reduction**

Product Code	Product Name	Shape	Rotating Direction	Max. Output	Max. Torque	Length	M	Weight	
AS41653	MSST-2302R	Straight	FWD. (CW)	108W	202 cN · m	6.47"	2.44"	14.29 oz.	
AS41655	MSST-2302RA	90° Angle				6.73"		15.73 oz.	

Standard Equipment · Accessories
• Collet ø1/8" (CHK-3.175) : 1 pc. • Collet Nut (K-265) • Wrench (12 x 14) : 2 pcs. • Hose (K-204 : R type) : 6 ft • Hose (K-215 : RA type) : ø6 mm x 6 ft • Hose (K-216 : RA type) : ø8 mm x 3 ft • Filter Joint (FJ-02 : R type), (FJ-01 : RA type) • Silencer (K-209 : R type), (K-208 : RA type)

*Refer to Page 3-p29 for mounting instructions for the 90° Angle Type.

COOLANT

MSSH-25 · MSS-25 SERIES STRAIGHT · 90° ANGLE TYPE 24,000 · 6,000 · 1,500 rpm

● STRAIGHT TYPE (R)

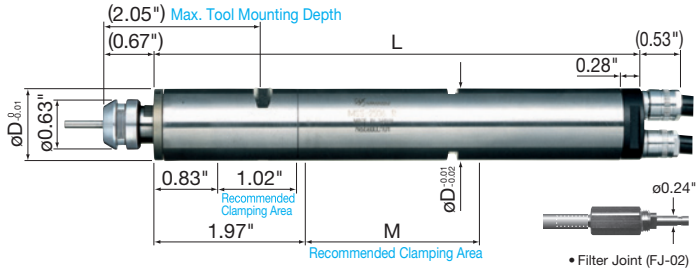

- Proper Air Pressure ····· 44~73PSI
- Air Consumption (R-type) : ····· 7.24CFM
  (RA-type) : ····· 6.00CFM
- Spindle Accuracy ····· Within 2 µm
- Motor Hose (Diameter / Length)
  [R-type] Air Intake ····· ø4.5 (I.D.) x ø6.7 (O.D.) mm / 6 ft
  Exhaust Air ····· ø5.5 (I.D.) x ø7.5 (O.D.) mm / 3 ft
  [RA-type] Air Intake ····· ø4.0 (I.D.) x ø6.0 (O.D.) mm / 6 ft
  Exhaust Air ····· ø5.5 (I.D.) x ø8.0 (O.D.) mm / 3 ft
- Standard Size Collet (CHK-3.175) ····· ø1/8"

< Optional >

- Collet (CHK-[][]) ····· ø0.5 mm~ø6.35 mm
  (See Page 6-p3 for details)
- Collet Nut (K-265) ····· For Collet (CHK)
- Metal Saw Arbor (KCH-03) ····· For ø0.24" (I.D.) x ø1.18" (O.D.)
- Grindstone Arbor (AGM-03) ··· For grinding wheel with I.D. of ø5 mm

● 90° ANGLE TYPE (RA)

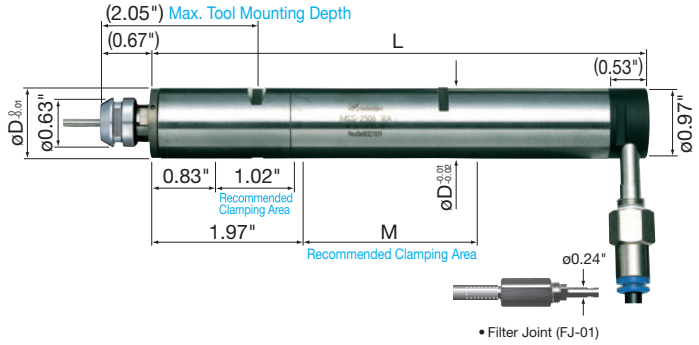

MSSH · MSS-25 SERIES Torque-Speed Characteristics

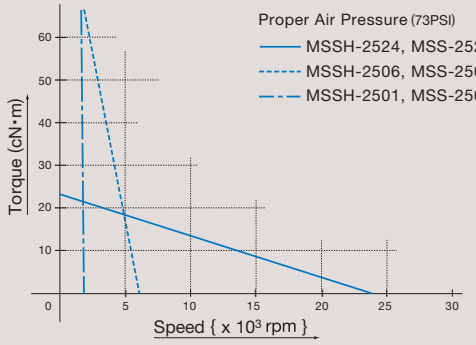

Caution : Two recommended clamp areas are laser-marked on the spindle. Select one of them for clamping, and do not clamp both areas.

R : 24,000 rpm (73PSI) / **RA : 22,000 rpm** (73PSI)

MSSH Series D = ø1.0"(ø25.4 mm)		MSS Series D = ø0.98"(ø25 mm)								
Product Code	Product Name	Product Code	Product Name	Shape	Rotating Direction	Max. Output	Max. Torque	Length	M	Weight
AS81721	MSSH-2524R	AS81690	MSS-2524R	Straight	FWD. (CW)	130W	22.5 cN · m	5.17"	0.98"	13.93 oz.
AS81723	MSSH-2524RA	AS81692	MSS-2524RA	90° Angle				5.43"		15.38 oz.

R : 6,000 rpm (73PSI) / **RA : 5,500 rpm** (73PSI) **1/4 Speed Reduction**

Product Code	Product Name	Product Code	Product Name	Shape	Rotating Direction	Max. Output	Max. Torque	Length	M	Weight
AS81729	MSSH-2506R	AS81698	MSS-2506R	Straight	FWD. (CW)	130W	85 cN · m	6.46"	2.28"	1 lb. 1.11 oz.
AS81731	MSSH-2506RA	AS81700	MSS-2506RA	90° Angle				6.72"		1 lb. 2.55 oz.

R : 1,500 rpm (73PSI) / **RA : 1,400 rpm** (73PSI) **1/16 Speed Reduction**

Product Code	Product Name	Product Code	Product Name	Shape	Rotating Direction	Max. Output	Max. Torque	Length	M	Weight
AS81737	MSSH-2501R	AS81706	MSS-2501R	Straight	FWD. (CW)	130W	332 cN · m	6.63"	2.44"	1 lb. 0.76 oz.
AS81739	MSSH-2501RA	AS81708	MSS-2501RA	90° Angle				6.89"		1 lb. 2.20 oz.

Standard Equipment · Accessories
• Collet ø1/8" (CHK-3.175) : 1 pc. • Collet Nut (K-265) • Wrench (12 x 14) : 2 pcs. • Hose (K-204 : R type) : 6 ft • Hose (K-215 : RA type) : ø6 mm x 6 ft • Hose (K-216 : RA type) : ø8 mm x 3 ft • Filter Joint (FJ-02 : R type), (FJ-01 : RA type) • Silencer (K-209 : R type), (K-208 : RA type)

*Order by product code.

Product Code 4502 AIR LINE KIT AL-M1202

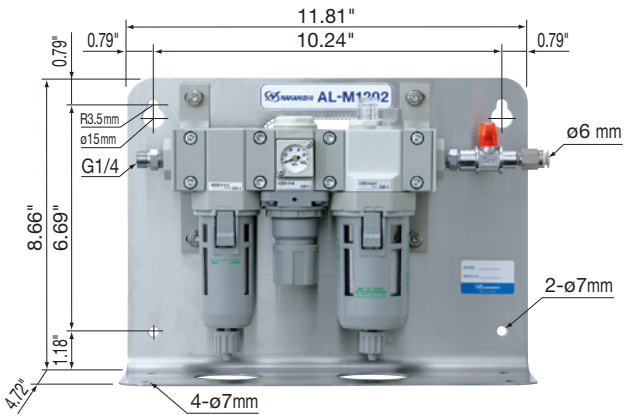

●The AL-M1202 provides simple, automatic conditioning of the air supplied to NAKANISHI Air Motors. The filter removes water and impure substances from the input air supply. The regulator maintains the proper air pressure, and the lubricator ensures proper oil flow to the motor and spindle. This Air Line Kit is wall mountable.

Air Line Kit (For ø6 mm Hose · **Filter Mesh 0.3 µm**)

Product Code	Product Name	Standard Equipment · Accessories	
4502	AL-M1202	• Air Filter • Air Regulator • Air Pressure Gauge • Lubricator • Air ON-OFF Valve • Hose for Piping (K-275) : 6 ft • Lubricating Oil (K-211) : 1 pc.	

Product Code 4503 AIR LINE KIT AL-M1203BS2

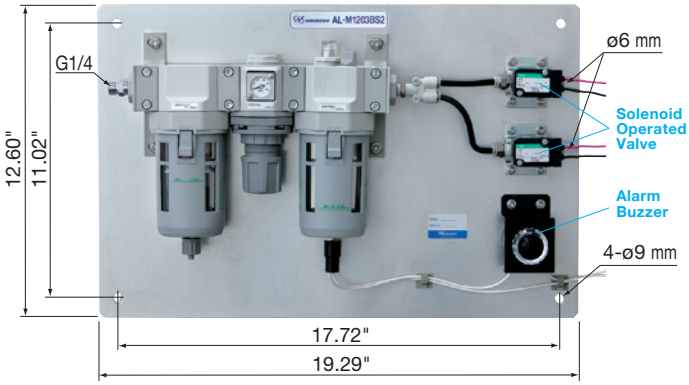

●The AL-M1203BS2 is equipped with 2 (DC+24V) Air Solenoids, a large capacity filter, large capacity oil reservoir, high flow regulator and a low oil level warning alarm, making this unit ideal for use on CNC machines. This Air Line Kit allows for the operation of 2 Air Motors.

Air Line Kit (For ø6 mm Hose · **Filter Mesh 0.3 µm**)

Product Code	Product Name	Standard Equipment · Accessories	
4503	AL-M1203 BS2	• Air Filter • Air Regulator • Air Pressure Gauge • Lubricator • Solenoid Valve (DC 24V) : 2 pcs. • Buzzer (DC 24V) • Hose for Piping (K-275) : 6 ft • Lubricating Oil (K-202) : 1 pc.	

LUBRICATING OIL

Lubricating Oil (4 oz.)

Product Code	Product Name	Product	
AA10478	K-211		

Lubricating Oil (32 oz.)

Product Code	Product Name	Product	Price
AA10480	K-202		

*Order by product code.

1
EmaxEVO
ESPERT
ROTUS
IMPULSE
PRESTO II
Sheenus ZERO
2
iSpeed3
E2000
ø1.0"/ø0.98"/ø0.897"
E3000
– One Piece
E3000
– Modular
ø1.18"
ø1.0"/ø0.98"
ø0.897"
E3000
– 80,000rpm
E4000
3
MA
ø0.897"
ø1.0"
ø0.98"
ø1.18"
MS
ø0.75"
ø0.79"
ø0.87"
ø0.91"
ø1.0"
ø0.98"
4
HES
iSpeed5
HTS
HPS
PLANET
Xpeed
ABT
5
AIR LINE KIT
6
PARTS
7
TECHNICAL DATA
8
APPLICATION EXAMPLES
INDEX

1
EmaxEVO
ESPERT
ROTUS
IMPULSE
PRESTO II
Sheenus ZERO
2
iSpeed3
E2000 ø1.0"/ø0.98"/ø0.897"
E3000 – One Piece
E3000 – Modular
ø1.18"
ø1.0"/ø0.98" ø0.897"
E3000 – 80,000rpm
E4000
3
MA
ø0.897"
ø1.0" ø0.98"
ø1.18"
MS
ø0.75" ø0.79"
ø0.87" ø0.91"
ø1.0" ø0.98"
4
HES
iSpeed5
HTS
HPS
PLANET
Xpeed
ABT
5
AIR LINE KIT
6
PARTS
7
TECHNICAL DATA
8
APPLICATION EXAMPLES
INDEX

THE TRANSFORMER

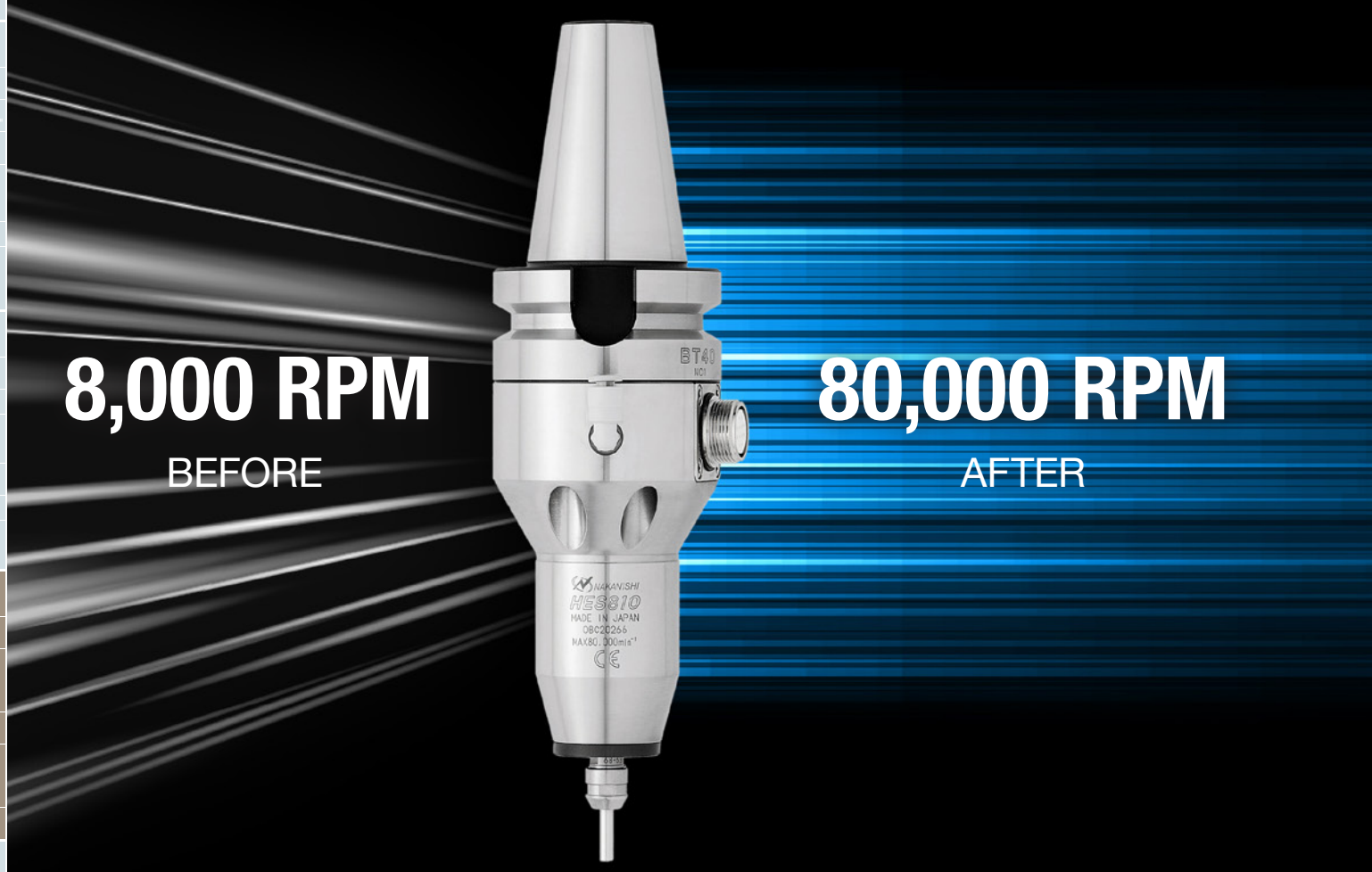

HES SERIES

Transform your Conventional Machine into a High-Speed Machining Center

Upgrade your existing NC Milling machines and CNC machining centers to high speed machines.

HES510

5,000~50,000 rpm Output : 340W

BT30 / 40 / 50, NT30 / 40 / 50 (M), CAT40 / 50
IT40 / 50, ST32, R8, HSK A63 / A100



HES810

20,000~80,000 rpm Output : 350W

BT30 / 40 / 50, NT40, CAT40
HSK A63, ST32



1
EmaxEVO
ESPERT
ROTUS
IMPULSE
PRESTO II
Sheenus ZERO
2
iSpeed3
E2000 ø1.0"/ø0.98"/ø0.897"
E3000 – One Piece
E3000 – Modular ø1.18"
ø1.0"/ø0.98" ø0.897"
E3000 – 80,000rpm
E4000
3
MA ø0.897"
ø1.0" ø0.98"
ø1.18"
MS ø0.75" ø0.79"
ø0.87" ø0.91"
ø1.0" ø0.98"
4
HES
iSpeed5
HTS
HPS
PLANET
Xpeed
ABT
5
AIR LINE KIT
6
PARTS
7
TECHNICAL DATA
8
APPLICATION EXAMPLES
INDEX

UPGRADE YOUR EXISTING NC MILLING MACHINES AND CNC MACHINING CENTERS TO HIGH SPEED MACHINES

1
EmaxEVO
ESPERT
ROTUS
IMPULSE
PRESTO II
Sheenus ZERO
2
iSpeed3
E2000 ø1.0"/ø0.98"/ø0.897"
E3000 – One Piece
E3000 – Modular
ø1.18"
ø1.0"/ø0.98" ø0.897"
E3000 – 80,000rpm
E4000
3
MA
ø0.897"
ø1.0" ø0.98"
ø1.18"
MS
ø0.75" ø0.79"
ø0.87" ø0.91"
ø1.0" ø0.98"
4
HES
iSpeed5
HTS
HPS
PLANET
Xpeed
ABT
5
AIR LINE KIT
6
PARTS
7
TECHNICAL DATA
8
APPLICATION EXAMPLES
INDEX

● ULTRA-PRECISION HIGH-SPEED MILLING SPINDLE

HES SERIES

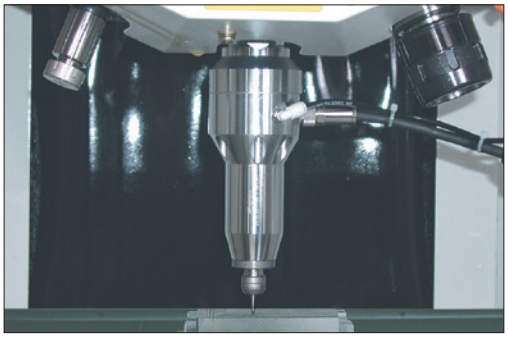

● FULLY TOOL CHANGEABLE ULTRA-PRECISION HIGH-SPEED MILLING SPINDLE

iSpeed5 SERIES



● HIGH-SPEED AIR MOTOR MILLING SPINDLE

HPS SERIES

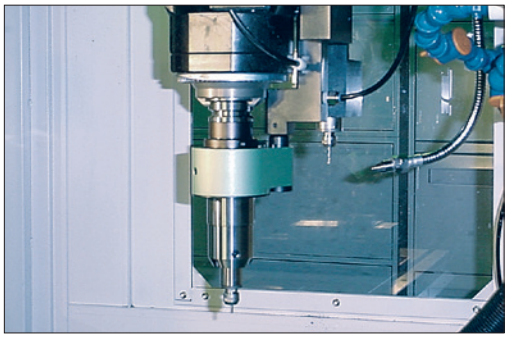

● ULTRA-HIGH SPEED AIR TURBINE MILLING SPINDLE

HTS SERIES

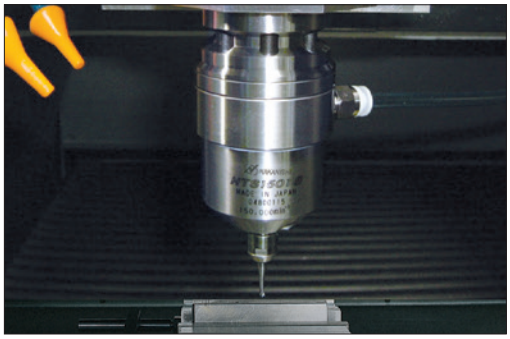

Milling System Comparison

Series	Drive Type	Type		Consumption	Product Name	Max Speed	Output Power	Max Collet Size	Shank
HES 	Electric	Brushless DC	120V	1.0 CFM (cooling)	HES510	50,000	340W	1/4"	BT30 / 40 / 50 NT30 / 40 / 50 (M) CAT40 / 50, IT40 / 50 ST32, R8 HSK A63 / A100
	Electric	Brushless DC	120V	0.53 CFM (cooling)	HES810	80,000	350W	4.0 mm	BT30 / 40 / 50 NT40 CAT40 HSK A63, ST32
iSpeed5 	Electric	Brushless DC	120V	1.0 CFM (cooling)	5ATC60	60,000	350W	6.35 mm	BT30 / 40 / 50 CAT40 / 50, IT40 / 50 HSK A63 / A100
	Electric	Brushless DC	120V	1.0 CFM (cooling)	5ATC80	80,000	350W	4.0 mm	BT30 / 40 / 50 CAT40 / 50, IT40 / 50 HSK A63 / A100
HPS 	Pneumatic	Vanes	73PSI	6.36 CFM	HPS250	25,000	77W	1/4"	BT30 CAT40
	Pneumatic	Vanes	73PSI	5.12 CFM	HPS500	50,000	51W	4.0 mm	BT30 CAT40
HTS 	Pneumatic	Air Turbine	73PSI	3.18 CFM	HTS1501	150,000	25W	4.0 mm	Straight ø20 mm BT30 / 40 / 50 HSK E25 / 32 / 40 / 50 HSK A63, HSK F63
Xpeed 	Pneumatic	Air Turbine	87PSI	10.60 CFM	Xpeed1200	120,000	192W	4.0 mm	Flange
	Pneumatic	Air Turbine	87PSI	5.65 CFM	Xpeed1600	160,000	56W	4.0 mm	Flange
ABT 	Pneumatic	Air Turbine	80PSI	< 1.77 CFM	ABT1000	100,000	88W	4.0 mm	Grip Ring

The Ultra-Precision, High-Speed HES510 spindles allow you to use your existing equipment for a much larger variety of operations. Conventional milling machines and machining centers can now do high-speed machining, small diameter drilling and milling with extremely good surface finishes with the HES510. **Max. Output 340W**

HES510 Features

5,000-50,000 rpm

Maximum Output 340W
The HES510 motor is a brushless DC motor that utilizes hall elements and rare-earth magnets to realize max. output 340W in a very compact size.

Ceramic Bearings
The spindle uses a double pair of ceramic bearings in the front and in the rear. This arrangement maximizes both radial and axial rigidity to insure extremely high-precision cutting.
The motor also uses ceramic bearings to maximize life expectancy.

Smooth Rotation
The absence of a commutator and the use of a photo coupler sending a feedback signal of 48 pulses per revolution result in very smooth rotation with low vibration throughout the speed range.

One-Piece motor and spindle construction
The motor and spindle are built as a single unit minimizing size and weight and allowing usage on a very wide variety or machines.

Emergency Connector
The system incorporates an emergency, breakaway connector to help prevent system damage in case the machine's main spindle is rotated accidentally.

Excellent Durability by air-cooling system
Air-cooling motor uses a small volume of air (1.0 CFM) to prevent heat buildup and allow long, continuous operation.

Best for small diameter drilling and milling
Less than ø0.08" (ø2 mm) small diameter drilling and milling with extremely good surface finishes, using a high-speed brushless motor.

Cooling Air
Clean dry air is required to cool the motor and protect the spindle from contaminants. Please use a filter and regulator.
(Proper air pressure 29-44PSI) (Use Air Line Kit AL-C1204)

Large Variety of Tapers Available
BT, NT, CAT, IT, ST32, R8 and HSK A tapers are available.

Protection Circuit
The controller is compact and lightweight. It features a protection circuit to stop the motor automatically in case of overload ensuring safe and smooth operation.



HES510 Specifications

- Speed ..... 5,000-50,000 rpm
- Max. Output Power 340W
- Spindle Accuracy ..... Within 1 µm
- Standard Size Collet (CHK-3.175) ..... ø1/8"

< Optional >
- Air Line Kit (AL-C1204) ..... For Controller NE211
- Collet (CHK-[][]) ..... ø0.5 mm-ø6.35 mm
  (See Page 6-p3 for details)
- Motor Cord (EMCD-810-[][]) ..... Length 13 ft (9248) / 19 ft (9249) / 26 ft (9250)
  Provided with Air Cooling Hose ø4 mm

Note : Motor Cord is sold separately.

Torque & Output Power Characteristic of HES510

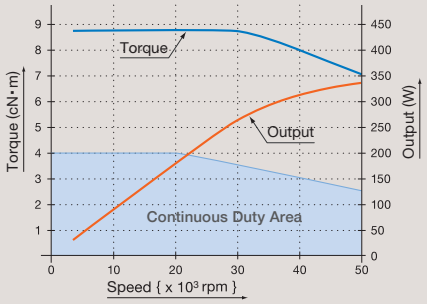

HES510 Connection Drawing
The HES510 motor and spindle require dry, clean, regulated air.
Please refer to the drawing to the right for proper components.
Air Line Kit AL-C1204 supplies clean dry air to the controller through the filter and the regulator.

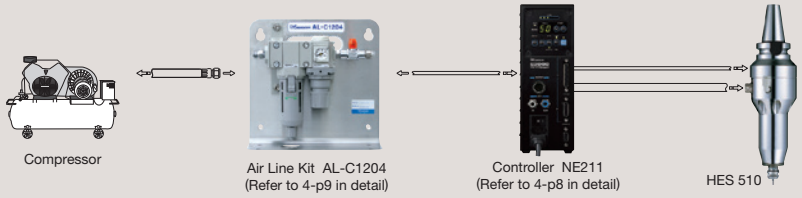

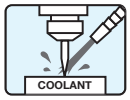

HES Series can be used in conjunction with water or oil based coolants.

Note : Motor Cord is sold separately.

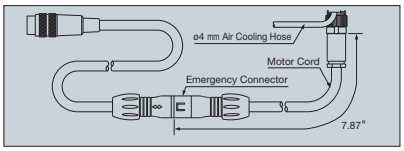

*All HES Series Spindles incorporate an emergency connector

1 EmaxEVO ESPERT ROTUS IMPULSE PRESTO II Sheenus ZERO
2 iSpeed3 E2000 ø1.0"/ø0.98"/ø0.897" E3000 – One Piece E3000 – Modular ø1.18" ø1.0"/ø0.98" ø0.897" E3000 – 80,000rpm E4000
3 MA ø0.897" ø1.0" ø0.98" ø1.18" MS ø0.75" ø0.79" ø0.87" ø0.91" ø1.0" ø0.98"
4 HES iSpeed5 HTS HPS PLANET Xpeed ABT
5 AIR LINE KIT
6 PARTS
7 TECHNICAL DATA
8 APPLICATION EXAMPLES
INDEX

HES510-BT30 / NT30 (M)

30

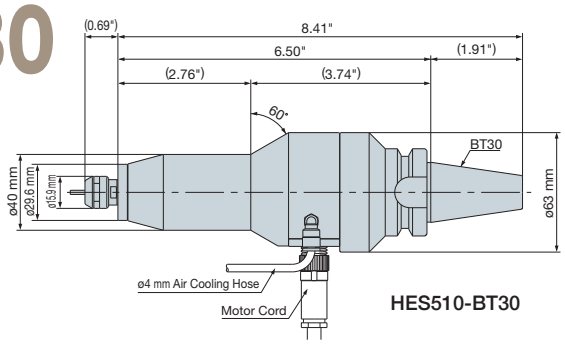

HES510-BT30

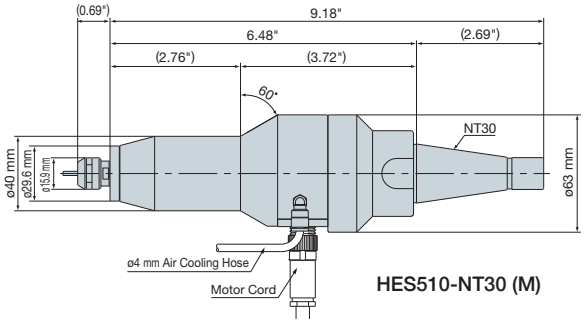

HES510-NT30 (M)

Product Code	Product Name	Standard Equipment · Accessories	Weight	
7621	HES510-BT30	• Collet ø1/8" (CHK-3.175) : 1 pc. • Collet Nut (K-265) : 1 pc. • Wrench (12 x 14) : 2 pcs.	4.85 lb.	
7622	HES510-NT30			
1945	HES510-NT30M			

*NT30M—Retention knob threads are metric.

HES510-BT40 / NT40 (M) / CAT40 / IT40

40

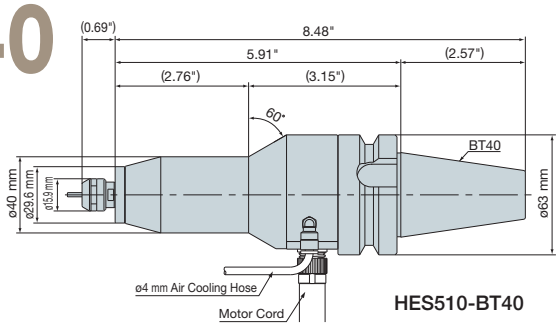

HES510-BT40

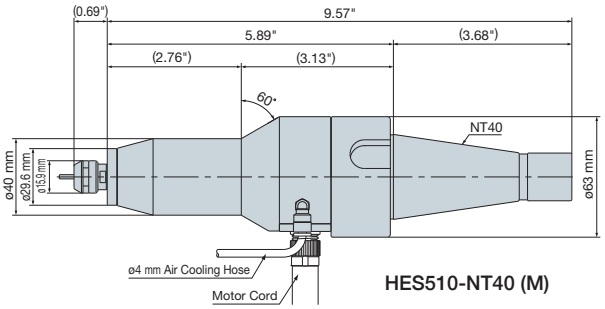

HES510-NT40 (M)

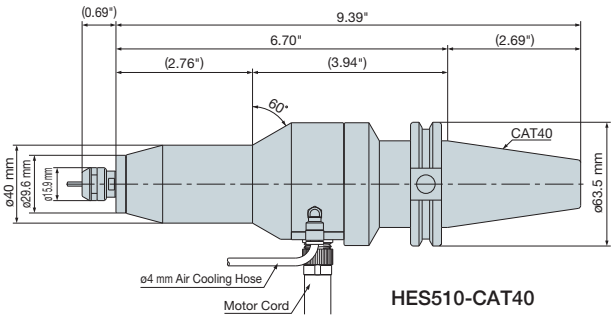

HES510-CAT40

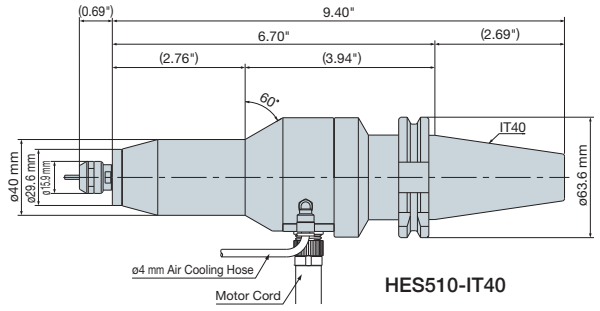

HES510-IT40

Product Code	Product Name	Standard Equipment · Accessories	Weight	
7619	HES510-BT40	• Collet ø1/8" (CHK-3.175) : 1 pc. • Collet Nut (K-265) : 1 pc. • Wrench (12 x 14) : 2 pcs.	5.07 lb.	
7620	HES510-NT40		5.29 lb.	
1948	HES510-NT40M		5.29 lb.	
1949	HES510-CAT40		5.75 lb.	
1950	HES510-IT40		5.73 lb.	

*NT40M—Retention knob threads are metric.

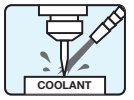

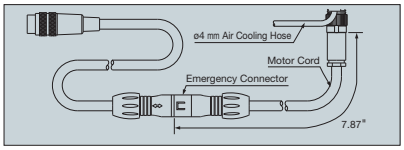

Note : Motor Cord is sold separately.

*All HES Series Spindles incorporate an emergency connector

HES510-BT50 / NT50 (M) / CAT50 / IT50

50

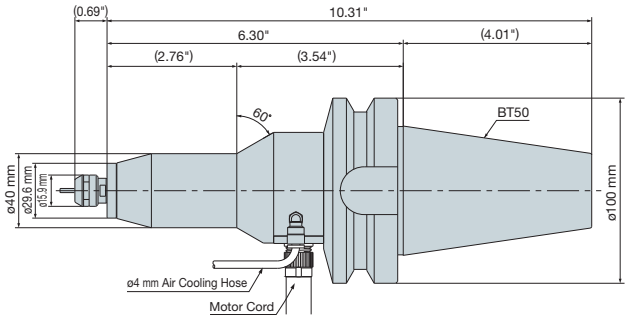

HES510-BT50

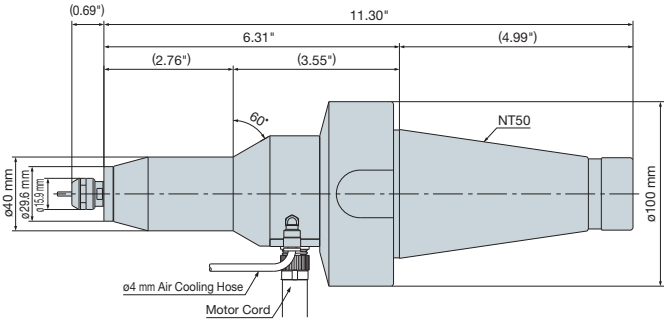

HES510-NT50 (M)

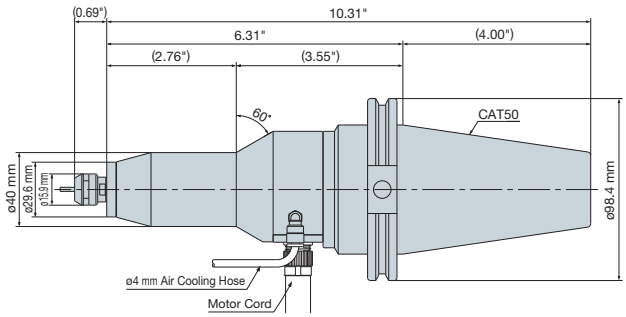

HES510-CAT50

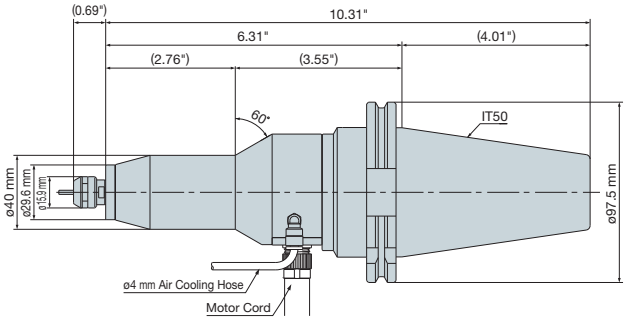

HES510-IT50

Product Code	Product Name	Standard Equipment · Accessories	Weight	
7617	HES510-BT50	• Collet ø1/8" (CHK-3.175) : 1 pc. • Collet Nut (K-265) : 1 pc. • Wrench (12 x 14) : 2 pcs.	11.02 lb.	
7618	HES510-NT50		11.90 lb.	
1953	HES510-NT50M		11.90 lb.	
1954	HES510-CAT50		9.70 lb.	
1955	HES510-IT50		9.70 lb.	

*NT50M—Retention knob threads are metric.

⚠ Caution

- **If the machine's main spindle is rotated by mistake, the Emergency Connector on the motor is designed to separate. In order for the Emergency Connector to function as designed it must be set and positioned correctly. Please refer to the owner's manual for proper installation and check the integrity of the Emergency Connector and suspension prior to each use.**

*For dimensions of taper shanks, please see page 4-p30, 31.

*Order by product code.

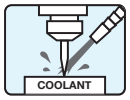

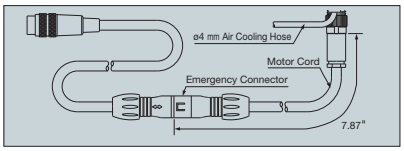

Note : Motor Cord is sold separately.

*All HES Series Spindles incorporate an emergency connector

HES510-ST32

ST32

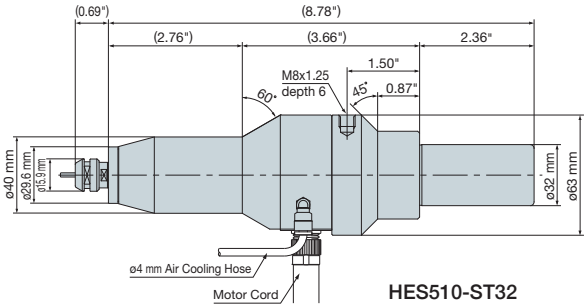

HES510-ST32

Product Code	Product Name	Standard Equipment · Accessories	Weight	
7623	HES510-ST32	• Collet ø1/8" (CHK-3.175) : 1 pc. • Collet Nut (K-265) : 1 pc. • Wrench (12 x 14) : 2 pcs.	5.29 lb.	

HES510-R8

R8

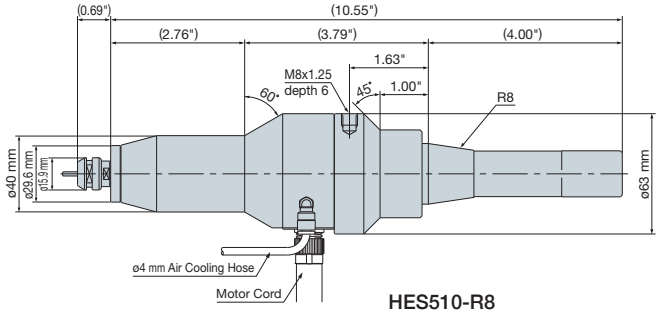

HES510-R8

Product Code	Product Name	Standard Equipment · Accessories	Weight	
9196	HES510-R8	• Collet ø1/8" (CHK-3.175) : 1 pc. • Collet Nut (K-265) : 1 pc. • Wrench (12 x 14) : 2 pcs.	5.29 lb.	

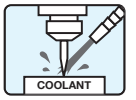

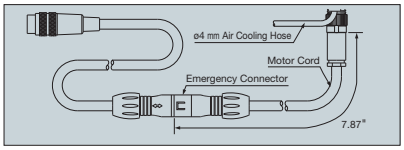

Note : Motor Cord is sold separately.

*All HES Series Spindles incorporate an emergency connector

HES510-HSK A63

HSK A63

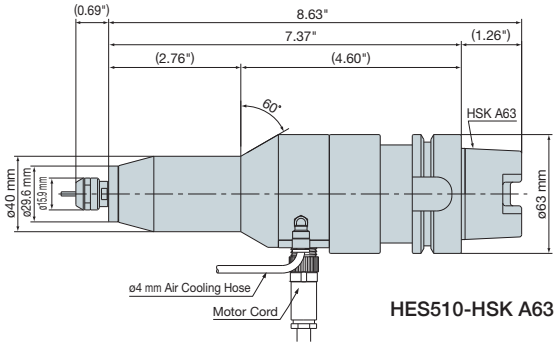

HES510-HSK A63

Product Code	Product Name	Standard Equipment · Accessories	Weight	
7624	HES510-HSK A63	• Collet ø1/8" (CHK-3.175) : 1 pc. • Collet Nut (K-265) : 1 pc. • Wrench (12 x 14) : 2 pcs.	5.95 lb.	

HES510-HSK A100

HSK A100

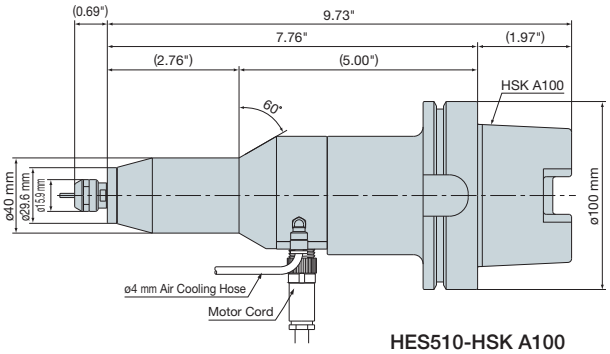

HES510-HSK A100

Product Code	Product Name	Standard Equipment · Accessories	Weight	
7625	HES510-HSK A100	• Collet ø1/8" (CHK-3.175) : 1 pc. • Collet Nut (K-265) : 1 pc. • Wrench (12 x 14) : 2 pcs.	9.70 lb.	

⚠ Caution

- **If the machine's main spindle is rotated by mistake, the Emergency Connector on the motor is designed to separate. In order for the Emergency Connector to function as designed it must be set and positioned correctly. Please refer to the owner's manual for proper installation and check the integrity of the Emergency Connector and suspension prior to each use.**

*For dimensions of taper shanks, please see page 4-p31, 32.

*Order by product code.

- AC100-240V for international operation
- 1,000~50,000 rpm
- Maximum Output 350W

Product Code 9775 CONTROLLER NE211 50,000 rpm

*: Load Meter



● : Continuous load area
● : Intermittent load area
● : Overload

External Input-Output Connector A (D-SUB25 Female)
External Input-Output Connector B (D-SUB15 Female)
Motor Connector
Air Output Joint ø6 mm
Air Input Joint ø6 mm
Power Switch
Communication Connector
Intake with Power Fuse



[1] Load Meter*
[2] Running LED (RUN)
[3] Warning LED (WARNING)
[4] Error LED (ERROR)
[5] Error Reset Switch (RESET)
[6] Gear Setting Switch (GEAR)
[7] Control Switch (AUTO/MANUAL)
[8] Rotating Direction Selector Switch (FWD./REV.)
[9] Start Switch (START)
[10] Motor Speed Adjustment Switch (SPEED)
[11] Display

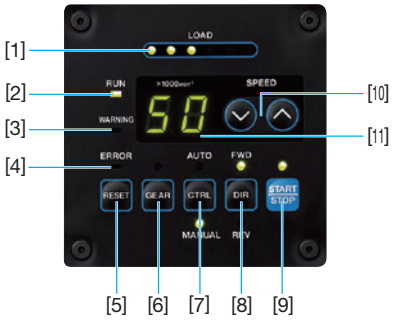

Specifications

Product Name	: NE211
Power Source	: AC120V
Motor Speed	: 1,000-50,000 rpm
Max. Output Power	: 350W
Power Consumption	: 1.8A
Air Flow Volume	: 1.0CFM (36-44PSI)
Weight	: 6 lb. 2.77 oz.
Dimensions	: W3.46" x D5.43" x H9.37"

E3000 Controller

Product Code	Plug Type	Product Name	Standard Equipment · Accessories	
9775	120V (B type)	NE211	• Power Cord : 6 ft • Air Hose with filter • Reducer • Connector Cap (Provided) • Bracket • Nylon Clip • Screw • Rubber Pad • Fuse (T6.3AL) 250V: 2 pcs.	

*Please refer to Technical Data 7-p2~p9 in detail about External Input-Output Connector.
*AC100-240V for international operation. Please check the power source plug type and order accordingly.

Interface Cable
Page 4-p13



● Power Source Plug

Plug Type	Main Usable Area	Product
For 100V (A type)	For Japan	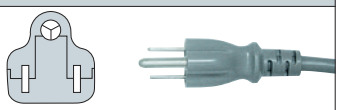
For 120V (B type)	For U.S.A. and Canada	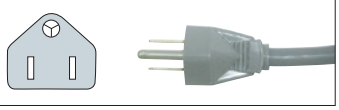

Plug Type	Main Usable Area	Product
For 200V (C type)	Without Plug	
For 230V (D type)	For Europe	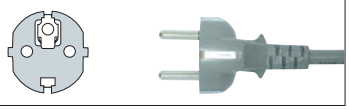

Product Code 4504 AIR LINE KIT AL-C1204

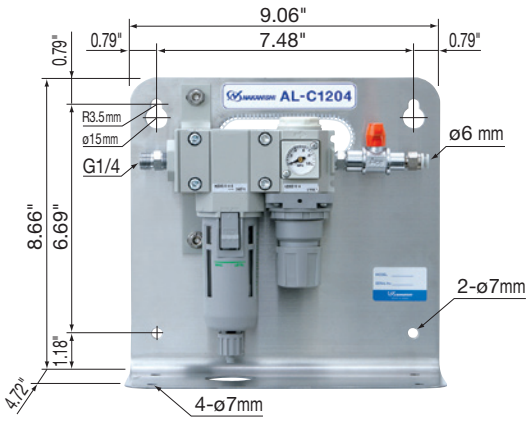

● The AL-C1204 Air Line Kit is designed to deliver clean, dry air to Electric Motors via the Controller. The filter removes small amounts of debris while the adjustable regulator provides the correct air pressure for cooling and purging.

Air Line Kit (For ø6 mm Hose · Filter Mesh 0.3 µm)

Product Code	Product Name	Standard Equipment · Accessories	
4504	AL-C1204	• Air Filter • Air Regulator • Air Pressure Gauge • Air ON-OFF Valve • Hose for Piping (K-275) : 6 ft	

MOTOR CORD

Product	Product Code	Description · Product Name	Length	Standard Equipment · Accessories	Fit to	
	9248	Motor Cord 4M EMCD-810-4M	13 ft	• Air Cooling Hose : ø4 mm • Reducer • Connector Cap (Provided)	HES510	
	9249	Motor Cord 6M EMCD-810-6M	19 ft			
	9250	Motor Cord 8M EMCD-810-8M	26 ft			

CONTROL PANEL EXTENSION CORD



Control Panel Extension Cord

Product Code	Product Name	For use with	
8407	E3000-PEX4	NE211	

HES Purchasing Example

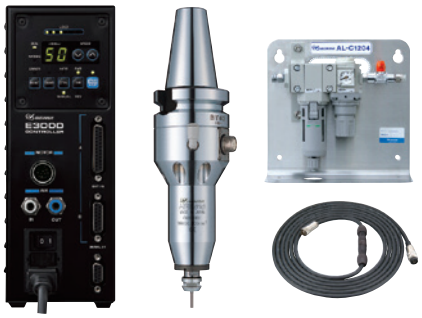

HES Purchasing Example

Description	Product Code	Product Name	
Spindle with CAT40	1949	HES510-CAT40	
Controller	9775	NE211	
13 ft Motor Cord	9248	EMCD-810-4M	
Air Line Kit	4504	AL-C1204	

The Ultra-Precision, High-Speed HES810 spindles allow you to use your existing equipment for a much larger variety of operations. Conventional milling machines and machining centers can now do high-speed machining, small diameter drilling and milling with extremely good surface finishes with the HES810. **Max. Output 350W**

HES810 Features

20,000-80,000 rpm

Maximum Output 350W

The HES810 motor is a brushless DC motor that utilizes hall elements and rare-earth magnets to achieve max. output 350W in a very compact size.

Ceramic Bearings

The spindle uses a double pair of ceramic bearings in the front and in the rear. This arrangement maximizes both radial and axial rigidity to insure extremely high-precision cutting.
The motor also uses ceramic bearings to maximize life expectancy.

Smooth Rotation

The absence of a commutator and the use of a photo coupler sending a feedback signal of 48 pulses per revolution result in very smooth rotation with low vibration throughout the speed range.

One-Piece motor and spindle construction

The motor and spindle are built as a single unit minimizing size and weight and allowing usage on a very wide variety or machines.

Emergency Connector

The system incorporates an emergency, breakaway connector to help prevent system damage in case the machine's main spindle is rotated accidentally.

Excellent Durability by air-cooling system

Air-cooling motor uses a small volume of air (0.53 CFM) to prevent heat buildup and allow long, continuous operation.

Best for small diameter drilling and milling

Less than ø0.08"(ø2 mm) small diameter drilling and milling with extremely good surface finishes, using a high-speed brushless motor.

Cooling Air

Clean dry air is required to cool the motor and protect the spindle from contaminants. Please use a filter and regulator.
(Proper air pressure 29-44PSI) (Use Air Line Kit AL-C1204)

Large Variety of Tapers Available

BT, NT, CAT, ST32 and HSK A tapers are available.

Protection Circuit

The controller is compact and lightweight. It features a protection circuit to stop the motor automatically in case of overload ensuring safe and smooth operation.



HES810 Specifications

- Speed ..... 20,000-80,000 rpm
- Ideal Operating Speed ..... 50,000-80,000 rpm
- Max. Output Power 350W
- Spindle Accuracy ..... Within 1 µm
- Standard Size Collet (CHA-3.175) ..... ø1/8"

< Optional >

- Air Line Kit (AL-C1204) ..... For Controller NE211
- Collet (CHA-[][]) ..... ø0.5 mm-ø4.0 mm
  (See Page 6-p2 for details)
- Motor Cord (EMCD-810-[][]) ..... Length 13 ft (9248) / 19 ft (9249) / 26 ft (9250)
  Provided with Air Cooling Hose ø4 mm

Note : Motor Cord is sold separately.

Torque & Output Power Characteristic of HES810

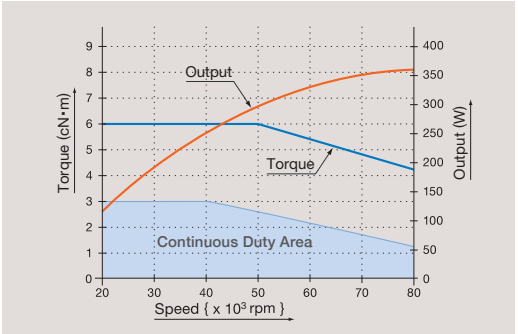

HES810 Connection Drawing

The HES810 motor and spindle require dry, clean, regulated air.
Please refer to the drawing to the right for proper components.
Air Line Kit AL-C1204 supplies clean dry air to the controller through the filter and the regulator.

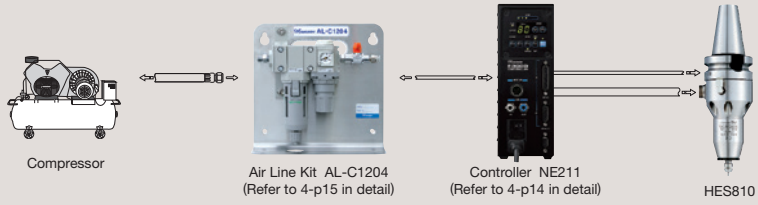

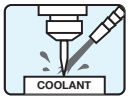

HES Series can be used in conjunction with water or oil based coolants.

Note : Motor Cord is sold separately.

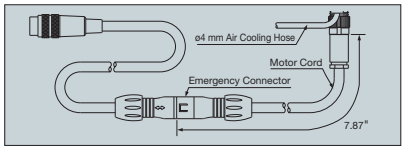

*All HES Series Spindles incorporate an emergency connector

HES810-BT30

30

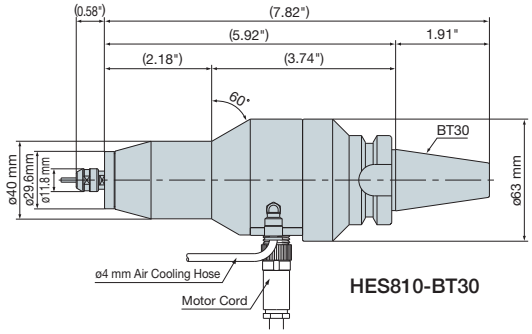

HES810-BT30

Product Code	Product Name	Standard Equipment · Accessories	Weight	
7611	HES810-BT30	• Collet ø1/8" (CHA-3.175) : 1 pc. • Collet Nut (CHN-A) : 1 pc. • Wrench (8 x 5), (9 x 11) : 1 pc. each	4.41 lb.	

HES810-BT40 / NT40 / CAT40

40

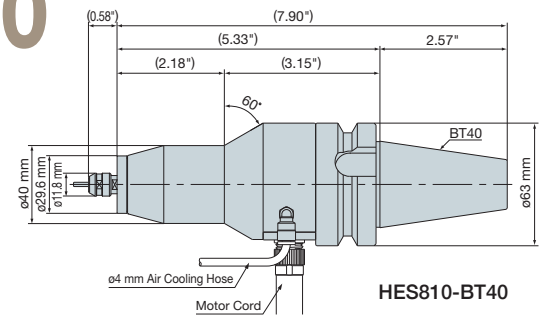

HES810-BT40

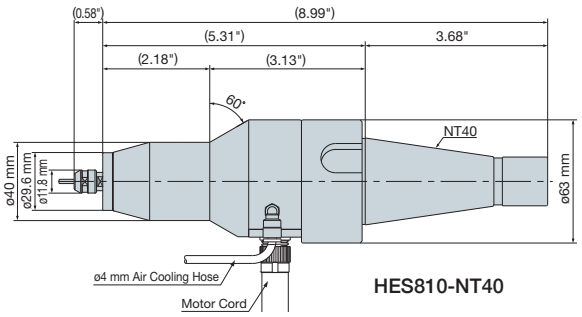

HES810-NT40

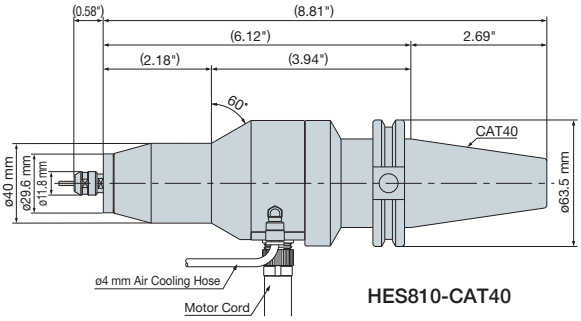

HES810-CAT40

Product Code	Product Name	Standard Equipment · Accessories	Weight	
7612	HES810-BT40	• Collet ø1/8" (CHA-3.175) : 1 pc. • Collet Nut (CHN-A) : 1 pc. • Wrench (8 x 5), (9 x 11) : 1 pc. each	4.85 lb.	
7613	HES810-NT40		5.07 lb.	
9201	HES810-CAT40		5.28 lb.	
9221	HES810-CAT50		9.70 lb.	

*For dimensions of taper shanks, please see page 4-p30.

*Order by product code.

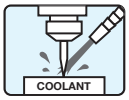

Note : Motor Cord is sold separately.

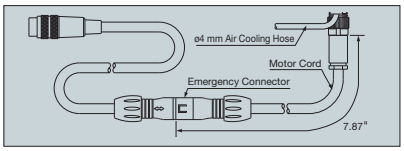

*All HES Series Spindles incorporate an emergency connector

HES810-BT50

50

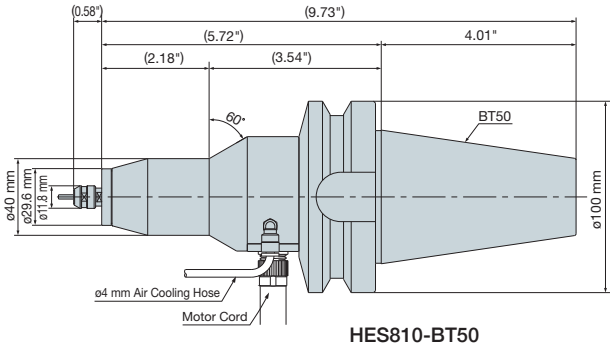

HES810-BT50

Product Code	Product Name	Standard Equipment · Accessories	Weight	
7614	HES810-BT50	• Collet ø1/8" (CHA-3.175) : 1 pc. • Collet Nut (CHN-A) : 1 pc. • Wrench (8 x 5), (9 x 11) : 1 pc. each	10.80 lb.	

HES810-HSK A63

HSK A63

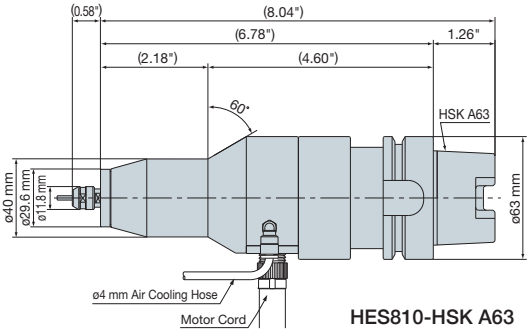

HES810-HSK A63

Product Code	Product Name	Standard Equipment · Accessories	Weight	
7615	HES810-HSK A63	• Collet ø1/8" (CHA-3.175) : 1 pc. • Collet Nut (CHN-A) : 1 pc. • Wrench (8 x 5), (9 x 11) : 1 pc. each	5.73 lb.	

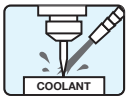

Note : Motor Cord is sold separately.

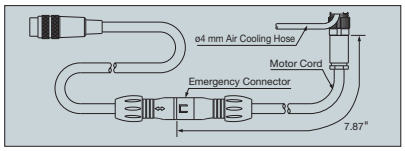

*All HES Series Spindles incorporate an emergency connector

HES810-ST32

ST32

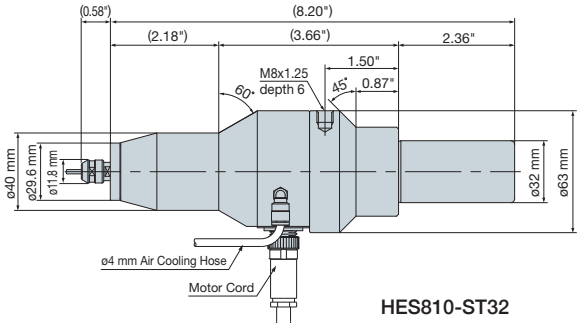

HES810-ST32

Product Code	Product Name	Standard Equipment · Accessories	Weight	
7616	HES810-ST32	• Collet ø1/8" (CHA-3.175) : 1 pc. • Collet Nut (CHN-A) : 1 pc. • Wrench (8 x 5), (9 x 11) : 1 pc. each	5.07 lb.	

Caution

- **If the machine's main spindle is rotated by mistake, the Emergency Connector on the motor is designed to separate. In order for the Emergency Connector to function as designed it must be set and positioned correctly. Please refer to the owner's manual for proper installation and check the integrity of the Emergency Connector and suspension prior to each use.**

25 Pin INTERFACE CABLE



- 3 Meter long Interface Cable provides a DB25 Male Connector at one end and a blunt cut on the opposite end. Includes a pin-out wire diagram for easy interfacing of I/O signals from any NSK Control to a CNC Control.

25 Pin Interface Cable

Product Code	Product Name		
DB25M	DB25M	For NSK Control Connector A	

15 Pin INTERFACE CABLE



- 3 Meter long Interface Cable provides a DB15 Male Connector at one end and a blunt cut on the opposite end. Includes a pin-out wire diagram for easy interfacing of the (OP1) "E-Stop Input Circuit" and "Safety Relay Circuit" from the NSK Control to a CNC Control.

15 Pin Interface Cable

Product Code	Product Name		
DB15M	DB15M	For NSK Control Connector B	

*For dimensions of taper shanks, please see page 4-p31, 32.

*Order by product code.

- AC100-240V for international operation
- 1,000~80,000 rpm
- Maximum Output 350W

Product Code 9775 CONTROLLER NE211 80,000 rpm

＊: Load Meter



● : Continuous load area
● : Intermittent load area
● : Overload

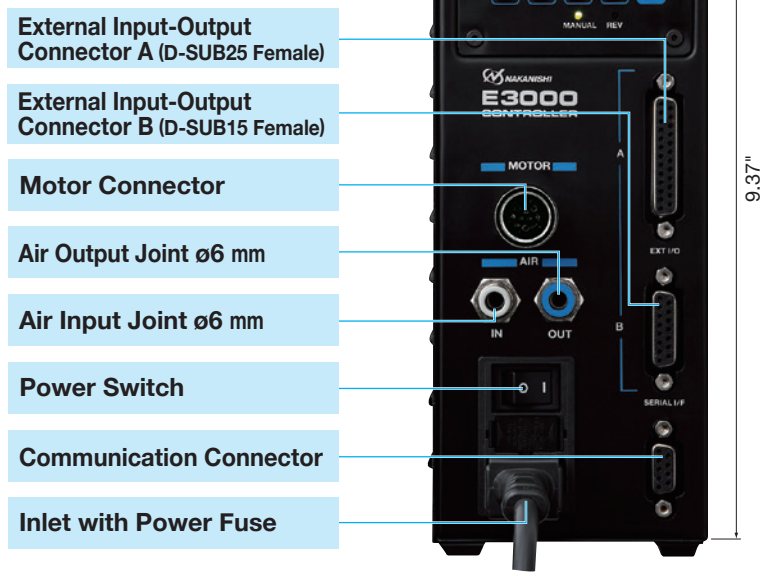

[1] Load Meter*
[2] Running LED (RUN)
[3] Warning LED (WARNING)
[4] Error LED (ERROR)
[5] Error Reset Switch (RESET)
[6] Gear Setting Switch (GEAR)
[7] Control Switch (AUTO/MANUAL)
[8] Rotating Direction Selector Switch (FWD./REV.)
[9] Start Switch (START)
[10] Motor Speed Adjustment Switch (SPEED)
[11] Display

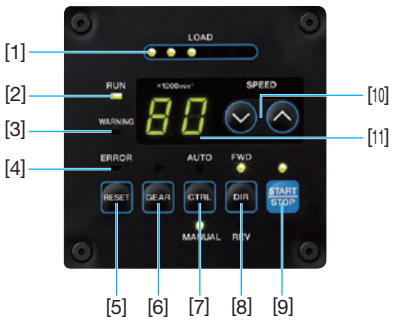

Specifications

Product Name	: NE211
Power Source	: AC120V
Motor Speed	: 1,000-80,000 rpm
Max. Output Power	: 350W
Power Consumption	: 1.8A
Air Flow Volume	: 1.0CFM (36-44PSI)
Weight	: 6 lb. 2.77 oz.
Dimensions	: W3.46" x D5.43" x H9.37"

E3000 Controller

Product Code	Plug Type	Product Name	Standard Equipment · Accessories	
9775	120V (B type)	NE211	• Power Cord : 6 ft • Air Hose with filter • Reducer • Connector Cap (Provided) • Bracket • Nylon Clip • Screw • Rubber Pad • Fuse (T6.3AL) 250V: 2 pcs.	

*Please refer to Technical Data 7-p2~p9 in detail about External Input-Output Connector.
*AC100-240V for international operation. Please check the power source plug type and order accordingly.

Interface Cable
Page 4-p13



● Power Source Plug

Plug Type	Main Usable Area	Product
For 100V (A type)	For Japan	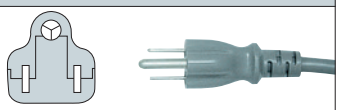
For 120V (B type)	For U.S.A. and Canada	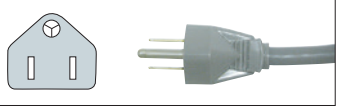

Plug Type	Main Usable Area	Product
For 200V (C type)	Without Plug	
For 230V (D type)	For Europe	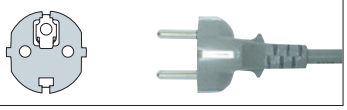

Product Code 4504 AIR LINE KIT AL-C1204

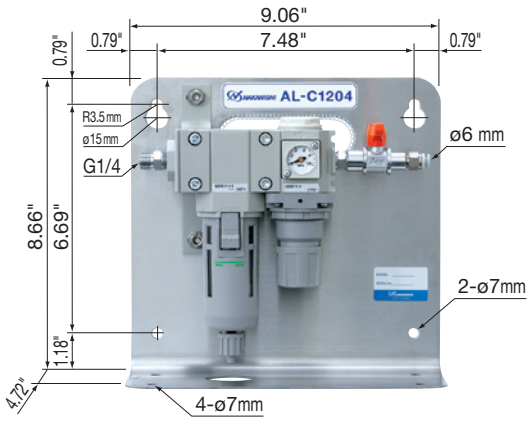

●The AL-C1204 Air Line Kit is designed to deliver clean, dry air to Electric Motors via the Controller. The filter removes small amounts of debris while the adjustable regulator provides the correct air pressure for cooling and purging.

Air Line Kit (For ø6 mm Hose · **Filter Mesh 0.3 µm**)

Product Code	Product Name	Standard Equipment · Accessories	
4504	AL-C1204	• Air Filter • Air Regulator • Air Pressure Gauge • Air ON-OFF Valve • Hose for Piping (K-275) : 6 ft	

MOTOR CORD

Product	Product Code	Description · Product Name	Length	Standard Equipment · Accessories	Fit to	
	9248	Motor Cord 4M EMCD-810-4M	13 ft	• Air Cooling Hose : ø4 mm • Reducer • Connector Cap (Provided)	HES810	
	9249	Motor Cord 6M EMCD-810-6M	19 ft			
	9250	Motor Cord 8M EMCD-810-8M	26 ft			

CONTROL PANEL EXTENSION CORD



Control Panel Extension Cord

Product Code	Product Name	For use with	
8407	E3000-PEX4	NE211	

HES Purchasing Example



HES Purchasing Example

Description	Product Code	Product Name	
Spindle with CAT40	9201	HES810-CAT40	
Controller	9775	NE211	
13 ft Motor Cord	9248	EMCD-810-4M	
Air Line Kit	4504	AL-C1204	

1 EmaxEVO ESPERT ROTUS IMPULSE PRESTO II Sheenus ZERO
2 iSpeed3 E2000 ø1.0"/ø0.98"/ø0.897" E3000 – One Piece E3000 – Modular ø1.18" ø1.0"/ø0.98" ø0.897" E3000 – 80,000rpm E4000
3 MA ø0.897" ø1.0" ø0.98" ø1.18" MS ø0.75" ø0.79" ø0.87" ø0.91" ø1.0" ø0.98"
4 HES iSpeed5 HTS HPS PLANET Xpeed ABT
5 AIR LINE KIT
6 PARTS
7 TECHNICAL DATA
8 APPLICATION EXAMPLES
INDEX

Product	Product Code	Product Name	Description	Fit to	
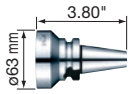	ASE 9148	HES510-BT30-SK	• Type : BT30 • Weight : 23.28 oz.	HES510-BT30 HES810-BT30	
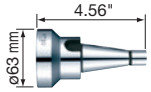	ASE 9153	HES510-NT30-SK	• Type : NT30 • Weight : 24.69 oz.	HES510-NT30	
	ASE 9154	HES510-NT30M-SK	• Type : NT30M *Metric threads • Weight : 24.69 oz.	HES510-NT30M	
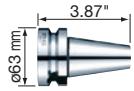	ASE 9149	HES510-BT40-SK	• Type : BT40 • Weight : 27.87 oz.	HES510-BT40 HES810-BT40	
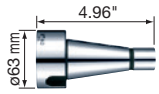	ASE 9155	HES510-NT40-SK	• Type : NT40 • Weight : 32.80 oz.	HES510-NT40 HES810-NT40	
	ASE 9156	HES510-NT40M-SK	• Type : NT40M *Metric threads • Weight : 32.80 oz.	HES510-NT40M	
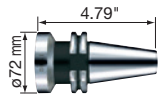	9191	HES510-IT40-SK	• Type : IT40 • Weight : 37.81 oz.	HES510-IT40 HES810-IT40	
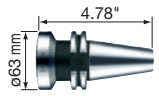	ASE 9193	HES510-CAT40-SK	• Type : CAT40 • Weight : 38.20 oz.	HES510-CAT40 HES810-CAT40	
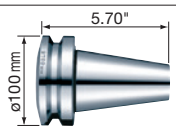	ASE 9150	HES510-BT50-SK	• Type : BT50 • Weight : 122.75 oz.	HES510-BT50 HES810-BT50	
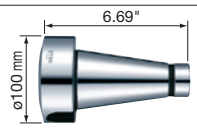	ASE 9157	HES510-NT50-SK	• Type : NT50 • Weight : 135.80 oz.	HES510-NT50	
	ASE 9158	HES510-NT50M-SK	• Type : NT50M *Metric threads • Weight : 136.16 oz.	HES510-NT50M	
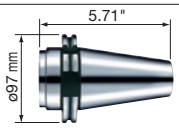	9190	HES510-IT50-SK	• Type : IT50 • Weight : 103.56 oz.	HES510-IT50	
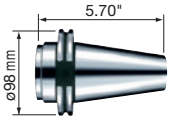	ASE 9192	HES510-CAT50-SK	• Type : CAT50 • Weight : 103.53 oz.	HES510-CAT50	
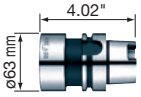	ASE 9152	HES510-HSK A63-SK	• Type : HSK A63 • Weight : 43.03 oz.	HES510-HSK A63 HES810-HSK A63	
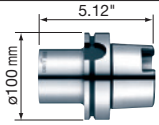	ASE 9151	HES510-HSK A100-SK	• Type : HSK A100 • Weight : 102.65 oz.	HES510-HSK A100	
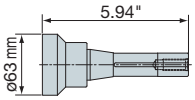	K812 A271	HES510-R8-SK	• Type : R8 • Weight : 32.00 oz.	HES510-R8	
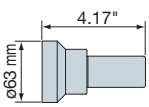	K812 A272	HES510-ST32-SK	• Type : ST32 • Weight : 31.82 oz.	HES510-ST32 HES810-ST32	

 *For dimensions of taper shanks, please see pages 4-p38-40.

*Order by product code.

AUTO PILOT ENGAGED



iSpeed5

Fully Tool-Changeable Electric Spindles to Increase Your Machine Tool Speed

1
EmaxEVO
ESPERT
ROTUS
IMPULSE
PRESTO II
Sheenus ZERO
2
iSpeed3
E2000 ø1.0"/ø0.98"/ø0.897"
E3000 – One Piece
E3000 – Modular
ø1.18"
ø1.0"/ø0.98" ø0.897"
E3000 – 80.000rpm
E4000
3
MA
ø0.897"
ø1.0" ø0.98"
ø1.18"
MS
ø0.75" ø0.79"
ø0.87" ø0.91"
ø1.0" ø0.98"
4
HES
iSpeed5
HTS
HPS
PLANET
Xpeed
ABT
5
AIR LINE KIT
6
PARTS
7
TECHNICAL DATA
8
APPLICATION EXAMPLES
INDEX

1
EmaxEVO
ESPERT
ROTUS
IMPULSE
PRESTO II
Sheenus ZERO
2
iSpeed3
E2000 ø1.0"/ø0.98"/ø0.897"
E3000 – One Piece
E3000 – Modular
ø1.18"
ø1.0"/ø0.98" ø0.897"
E3000 – 80,000rpm
E4000
3
MA
ø0.897"
ø1.0" ø0.98"
ø1.18"
MS
ø0.75" ø0.79"
ø0.87" ø0.91"
ø1.0" ø0.98"
4
HES
iSpeed5
HTS
HPS
PLANET
Xpeed
ABT
5
AIR LINE KIT
6
PARTS
7
TECHNICAL DATA
8
APPLICATION EXAMPLES
INDEX

- **Upgrade your existing CNC machining centers to high speed machines with full automatic tool changeability.**

60,000 ~ 80,000 max rpm
Output 350 W



- **The iSpeed5 System primarily consists of a motor spindle, stop block, air pressure switch and control unit.**
- **Power, cooling air, and control signals are provided to the spindle when engaged to the innovative electromechanical stop block that attaches to your machine tool spindle.**
- **The iSpeed5 is created for continuous lights out manufacturing even in the case of cutting fluids and coolants.**
- **The internal air passage allows the pressurization and cooling of the system while preventing the entry of contaminants into the stop block.**

iSpeed5 Features

- **Maximum 60,000 / 80,000 rpm**
  Variable speed units
- **Maximum Motor Power Output 350W**
- **Available Collets** NEW!
  NR3060S: CHK diameter 0.5mm ~ 6.35mm
  NR3080S: CHA diameter 0.5mm ~ 4.0mm

The required components of the iSpeed5 System are as follows:

- iSpeed5 Controller
- iSpeed5 Motor Spindle Unit
- 60,000 or 80,000 rpm High Speed Spindle
- Stop Block Complete with Motor Cord
- Special Flange (if needed)
- 25pin Interface Cable
- Air Line Kit Filter
- Pressure Switch
- CHK or CHA 3.175mm Collet
- Collet Nut Wrenches
- Spindle Wrench
- User Manual



iSpeed5 Specifications

- Speed ····· 60,000 / 80,000 rpm
- Max. Output Power ····· 350W
- Spindle Accuracy ····· Within 1 µm
- Standard Size Collet (CHK/CHA-3.175) ····· ø1/8"

< Optional >

- Air Line Kit (AL-C1204) ····· For Controller NE287
- Collet (CHK-[][]) ····· ø0.5 mm-ø6.35 mm
- Collet (CHA-[][]) ····· ø0.5 mm-ø4.0 mm

System Chart (Motor Speed 60,000 rpm and 80,000 rpm)



*CAT40/BT40/HSK63A weigh less than 9lb. CAT50/HSK100A weigh less than 13lb.

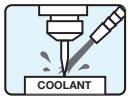

iSpeed5 Series can be used in conjunction with water or oil based coolants.

5ATC60-CAT40 / BT40 5ATC80-CAT40 / BT40

40

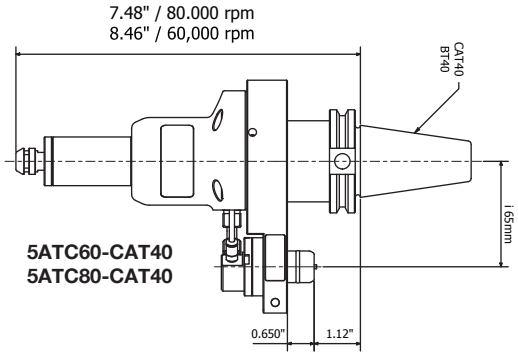

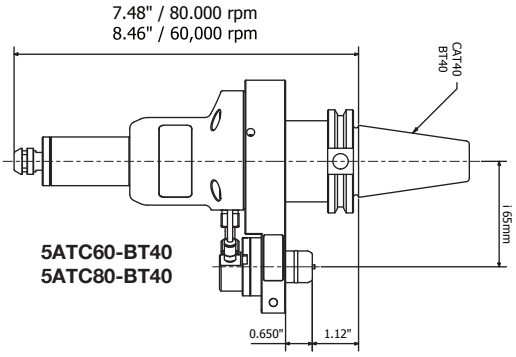

Product Code	Product Name	Description	
506001	5ATC60-CAT40	60,000 RPM ATC Spindle CAT40 iSpeed5	
506002	5ATC60-BT40	60,000 RPM ATC Spindle BT40 iSpeed5	
508001	5ATC80-CAT40	80,000 RPM ATC Spindle CAT40 iSpeed5	
508002	5ATC80-BT40	80,000 RPM ATC Spindle BT40 iSpeed5	

5ATC60-CAT50 / BT50 5ATC80-CAT50 / BT50

50

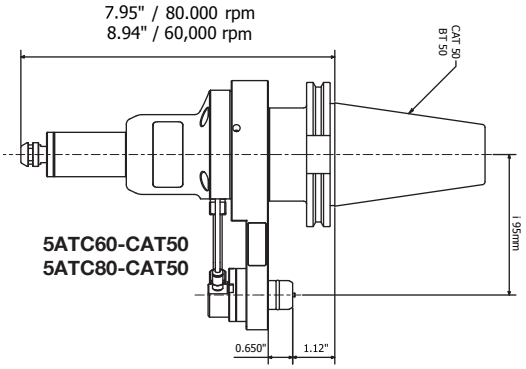

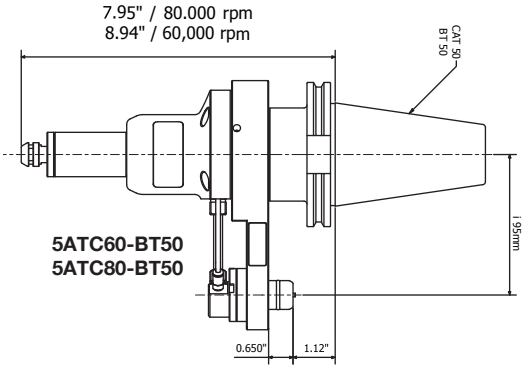

Product Code	Product Name	Description	
506003	5ATC60-CAT50	60,000 RPM ATC Spindle CAT50 iSpeed5	
506004	5ATC60-BT50	60,000 RPM ATC Spindle BT50 iSpeed5	
508003	5ATC80-CAT50	80,000 RPM ATC Spindle CAT50 iSpeed5	
508004	5ATC80-BT50	80,000 RPM ATC Spindle BT50 iSpeed5	

5ATC60-HSK63A 5ATC80-HSK63A

HSK 63A

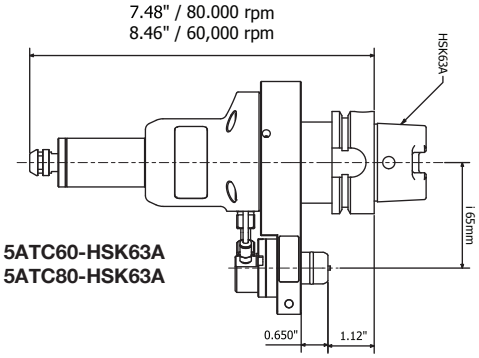

Product Code	Product Name	Description	
506005	5ATC60-HSK63A	60,000 RPM ATC Spindle HSK63A iSpeed5	
508005	5ATC80-HSK63A	80,000 RPM ATC Spindle HSK63A iSpeed5	

5ATC60-HSK100A 5ATC80-HSK100A

100

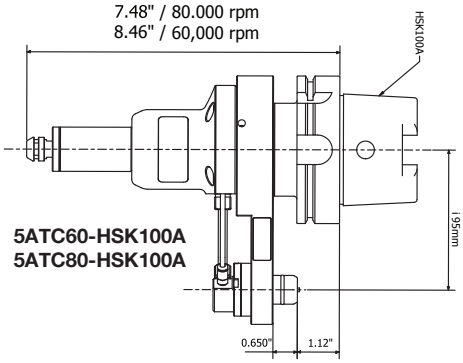

Product Code	Product Name	Description	
506006	5ATC60-HSK100A	60,000 RPM ATC Spindle HSK100A iSpeed5	
508006	5ATC80-HSK100A	80,000 RPM ATC Spindle HSK100A iSpeed5	

- AC100-240V Auto-Sensing
- 1,000~80,000 rpm
- Maximum Output 350W

Product Code 8491 CONTROLLER NE287 80,000 rpm

∗: Load Meter



● : Continuous load area
● : Intermittent load area
● : Overload



[1] Load Meter
[2] Display
[3] Motor Speed Adjustment Switch (SPEED)
[4] Display Switch (RPM/MILLIAMP)
[5] Error Reset Switch (RESET)
[6] Stop Block Connection LED
[7] Motor Indicator (SPEED 1-4)
[8] Air Connection LED
[9] Control Switch (AUTO/MANUAL)
[10] Handy Controller Connection
[11] Start Switch (START/STOP)
[12] Rotating Direction Selector Switch (FWD/REV)

Specifications

Product Name	: NE287
Power Source	: AC120V/240V
Motor Speed	: 1,000-80,000 rpm
Max. Output Power	: 350W
Power Consumption	: 1.8A
Air Flow Volume	: 1.0CFM (36-44PSI)
Weight	: 6 lb. 2.77 oz.
Dimensions	: W3.46" x D5.43" x H9.37"

iSpeed5 Controller

Product Code	Plug Type	Product Name	Standard Equipment · Accessories	
8491	C type	NE287	• Power Cord : 6 ft • Air Hose with filter • Reducer • Connector Cap (Provided) • Bracket • Nylon Clip • Screw • Rubber Pad • Fuse (T6.3AL) 250V: 2 pcs.	

*Please refer to Operation Manual for details about External Input-Output Connector.

Interface Cable DB25M



● Power Source Plug

Plug Type	Main Usable Area	Product
For 200V (C type)	Without Plug	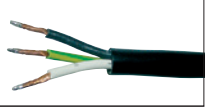

Product Code 8492 Handy Controller



- The iSpeed5 handy controller allows hand-held operation of the system from a distance. The device features all of the same buttons and functions as the main controller, including speed adjustment, reverse and reset.

Product Code	Product Name	Description	
8492	NE287 HC	iSpeed5 Handy Controller	

Product Code 500101 Stop Block



- The iSpeed5 stop block integrates with the iSpeed5 controller in order to make automatic tool change possible. The stop block shape and size are unique to your machine brand and model. Please contact your NSK Sales Representative for inquiries.

Product Code	Product Name	Description	
500101	SB-1	Stopblock Style 1	
500102	SB-2	Stopblock Style 2	
500103	SB-3	Stopblock Style 3	
500104	SB-4	Stopblock Style 4 Shutter Mazak	

Product Code ISE30A Pressure Switch



Product Code	Product Name	Description	
ISE30A	5ATC-PS	Air Pressure Switch for iSpeed5	

Product Code 8493 Bracket (L-Type)



Product Code	Description	
8493	BRACKET (L-Type)	

Product Code 8494 Bracket (H-Type)



Product Code	Description	
8494	BRACKET (H-Type)	

Product Code 4504 AIR LINE KIT AL-C1204

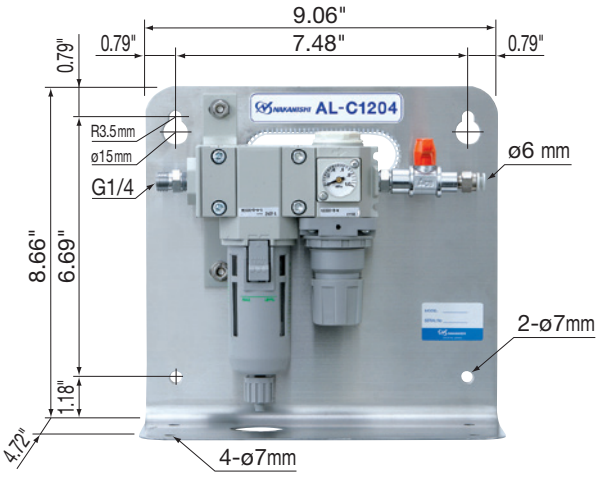

- The AL-C1204 Air Line Kit is designed to deliver clean, dry air to Electric Motors via the Controller. The filter removes small amounts of debris while the adjustable regulator provides the correct air pressure for cooling and purging.

Air Line Kit (For ø6 mm Hose · **Filter Mesh 0.3 µm**)

Product Code	Product Name	Standard Equipment · Accessories	
4504	AL-C1204	• Air Filter • Air Regulator • Air Pressure Gauge • Air ON-OFF Valve • Hose for Piping (K-275) : 6 ft	

Dramatically shorten mold cavity machining time.

HTS1501S-BT30 / 40 / 50

150,000 rpm Output : 25W



HTS1501S-HSK E25 / 32 / 40 / 50

150,000 rpm Output : 25W



HTS1501S-HSK A63

150,000 rpm Output : 25W



HTS1501S-HSK F63

150,000 rpm Output : 25W



HTS1501S-M2040

150,000 rpm Output : 25W



1
EmaxEVO
ESPERT
ROTUS
IMPULSE
PRESTO II
Sheenus ZERO
2
iSpeed3
E2000 ø1.0"/ø0.98"/ø0.897"
E3000 – One Piece
E3000 – Modular
ø1.18"
ø1.0"/ø0.98" ø0.897"
E3000 – 80,000rpm
E4000
3
MA
ø0.897"
ø1.0" ø0.98"
ø1.18"
MS
ø0.75" ø0.79"
ø0.87" ø0.91"
ø1.0" ø0.98"
4
HES
iSpeed5
HTS
HPS
PLANET
Xpeed
ABT
5
AIR LINE KIT
6
PARTS
7
TECHNICAL DATA
8
APPLICATION EXAMPLES
INDEX

HTS Series Features

- High Speed 150,000 rpm
- Suitable for cutting tool diameters of less than R0.5mm in reference to Ball End Mills
- Negligible spindle expansion

  Air Turbine mechanism has extremely low heat generation. Up to cutting tool R x 0.1 mm depth of cut is possible.
- Very High Feed Rates are possible
- Highly stable milling conditions are possible even with very small diameter cutting tools.

  Usable max. cutting tool diameter : Ball End Mill R0.5 mm, Square End Mill ø1 mm
- Spindle Accuracy is within 1 µm
- Dramatically shorten mold cavity machining time

HTS Series Milling Capacity Reference

Milling : Straight Milling / Work : NAK80 / Motor Speed : 150,000 rpm

Caution) 1. Ball End Mill Type with ultra hard coating. Cutting tool capabilities vary depending on the tools being used.
2. Milling capacity may change depending on the tools being used, the material being cut and other application variables.

- Ball End Mill Size : R0.05 mm L = 0.1 mm

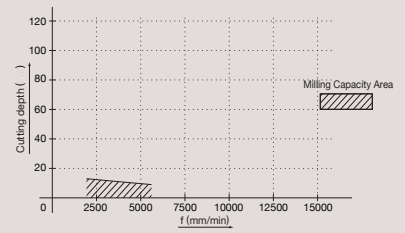

- Ball End Mill Size : R0.1 mm L = 0.5 mm

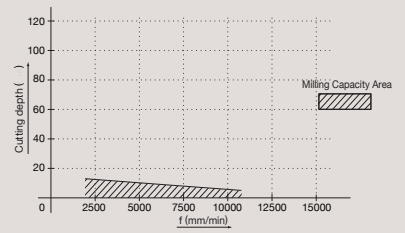

- Ball End Mill Size : R0.2 mm L = 1.0 mm

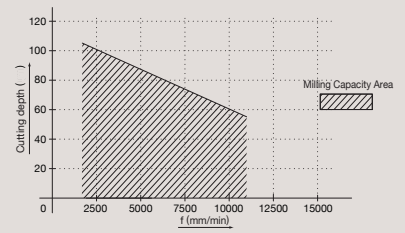

- Ball End Mill Size : R0.5 mm L = 2.5 mm

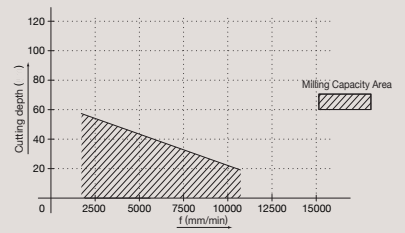



HTS Series Specifications

- Speed ····· 150,000 rpm) (73PSI)
- Max. Output Power ····· 25W
- Air type ····· Side Air Supply Type
- Shank ····· Straight, BT30 / 40 / 50, HSK E25 / 32 / 40 / 50 / A63 / F63
- Proper Air Pressure ····· 44~73PSI
- Air Consumption ····· 3.18CFM
- Spindle Accuracy ····· Within 1 µm
- Hose Diameter (Air Intake) ····· ø6 mm (O.D.)
- Standard Size Collet (CHA-4.0) ····· ø4.0 mm

< Optional >

- Collet (CHA-[][]) ····· ø0.5 mm~ø4.0 mm

(See Page 6-p2 for details)

HTS Series Connection Drawing

Clean, lubricated, and regulated air is required for HTS Series spindles. Please refer to the diagram to the right for proper connections. AL-M1202 incorporates a filter, regulator and lubricator to provide the appropriate air.



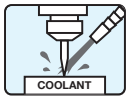

HTS Series can be used in conjunction with water or oil based coolants.

Product Code 8296 HTS1501S-BT30

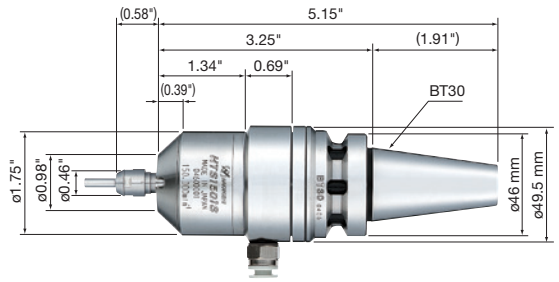

●BT30 taper shanks make this spindle very easy to attach to small machining centers. Very High speed milling is possible.

Air Turbine Spindle

Product Code	Product Name	Weight	
8296	HTS1501S-BT30	36.33 oz.	

Standard Equipment · Accessories

• Collet ø4.0 mm (CHA-4.0) • Collet Nut (CHN-AA)
• Wrench (8 x 5), (9 x 11) : 1 pc. each • Filter Joint (FJ-01)
• Hose (K-247) : ø6 mm x 13 ft

Product Code 8297 HTS1501S-BT40

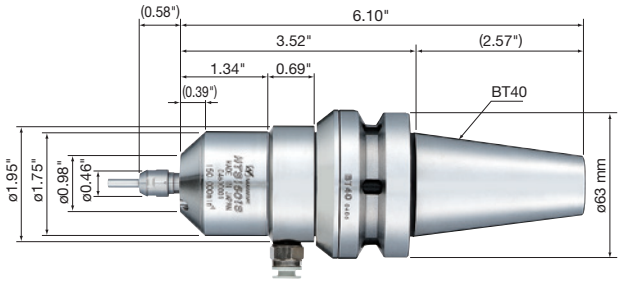

●BT40 taper shanks make this spindle very easy to attach to a wide variety of machining centers. Very High speed milling is possible.

Air Turbine Spindle

Product Code	Product Name	Weight	
8297	HTS1501S-BT40	59.97 oz.	

Standard Equipment · Accessories

• Collet ø4.0 mm (CHA-4.0) • Collet Nut (CHN-AA)
• Wrench (8 x 5), (9 x 11) : 1 pc. each • Filter Joint (FJ-01)
• Hose (K-247) : ø6 mm x 13 ft

Product Code 8281 HTS1501S-BT50

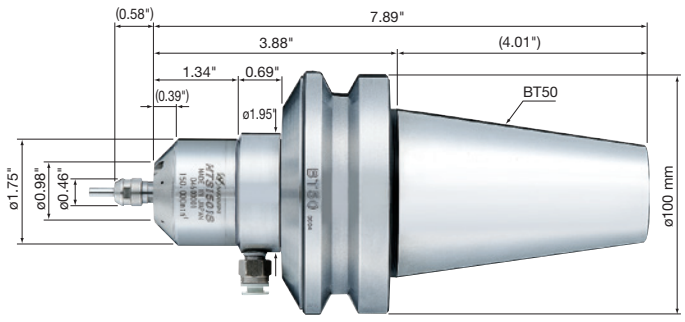

●BT50 taper shanks make this spindle very easy to attach to a wide variety of machining centers. Very High speed milling is possible.

Air Turbine Spindle

Product Code	Product Name	Weight	
8281	HTS1501S-BT50	158.73 oz.	

Standard Equipment · Accessories

• Collet ø4.0 mm (CHA-4.0) • Collet Nut (CHN-AA)
• Wrench (8 x 5), (9 x 11) : 1 pc. each • Filter Joint (FJ-01)
• Hose (K-247) : ø6 mm x 13 ft

*For dimensions of taper shanks, please see pages 4-p38-40.

*Order by product code.

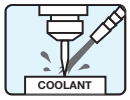

Product Code 8300 HTS1501S-HSK E25

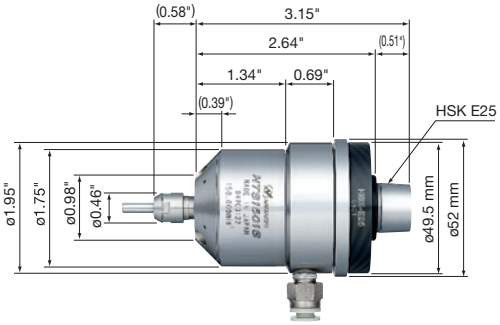

- HSK E25 taper shanks make this spindle very easy to attach to your machining centers. Very High speed milling is possible.

Air Turbine Spindle

Product Code	Product Name	Weight	
8300	HTS1501S-HSK E25	26.81 oz.	

Standard Equipment · Accessories

- Collet ø4.0 mm (CHA-4.0) • Collet Nut (CHN-AA)
- Wrench (8 x 5), (9 x 11) : 1 pc. each • Filter Joint (FJ-01)
- Hose (K-247) : ø6 mm x 13 ft

Product Code 8283 HTS1501S-HSK E32

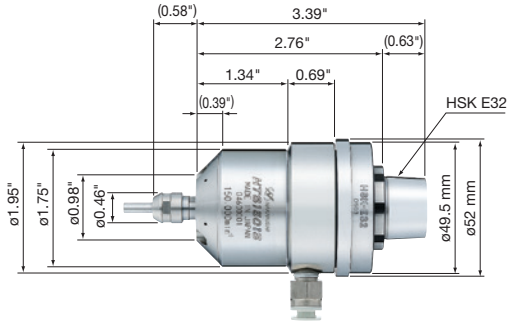

- HSK E32 taper shanks make this spindle very easy to attach to your machining centers. Very High speed milling is possible.

Air Turbine Spindle

Product Code	Product Name	Weight	
8283	HTS1501S-HSK E32	27.87 oz.	

Standard Equipment · Accessories

- Collet ø4.0 mm (CHA-4.0) • Collet Nut (CHN-AA)
- Wrench (8 x 5), (9 x 11) : 1 pc. each • Filter Joint (FJ-01)
- Hose (K-247) : ø6 mm x 13 ft

Product Code 8279 HTS1501S-HSK E40

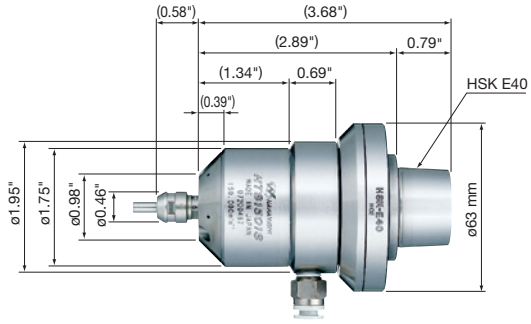

- HSK E40 taper shanks make this spindle very easy to attach to your machining centers. Very High speed milling is possible.

Air Turbine Spindle

Product Code	Product Name	Weight	
8279	HTS1501S-HSK E40	34.57 oz.	

Standard Equipment · Accessories

- Collet ø4.0 mm (CHA-4.0) • Collet Nut (CHN-AA)
- Wrench (8 x 5), (9 x 11) : 1 pc. each • Filter Joint (FJ-01)
- Hose (K-247) : ø6 mm x 13 ft

Product Code 8280 HTS1501S-HSK E50

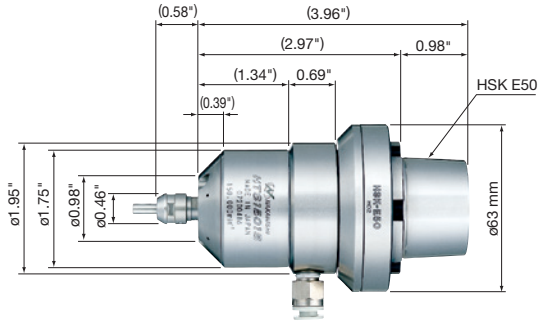

- HSK E50 taper shanks make this spindle very easy to attach to your machining centers. Very High speed milling is possible.

Air Turbine Spindle

Product Code	Product Name	Weight	
8280	HTS1501S-HSK E50	37.74 oz	

Standard Equipment · Accessories

- Collet ø4.0 mm (CHA-4.0) • Collet Nut (CHN-AA)
- Wrench (8 x 5), (9 x 11) : 1 pc. each • Filter Joint (FJ-01)
- Hose (K-247) : ø6 mm x 13 ft

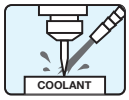

Product Code 8298 HTS1501S-HSK A63

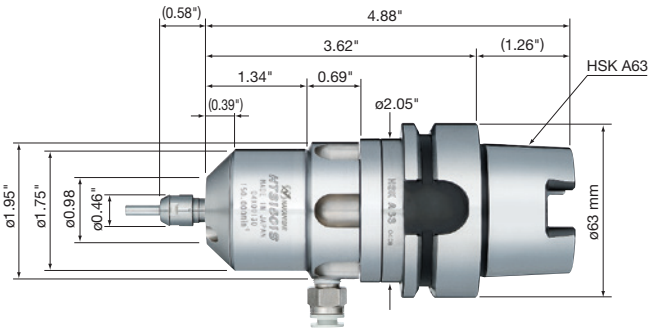

●HSK A63 taper shanks make this spindle very easy to attach to your machining centers. Very High speed milling is possible.

Air Turbine Spindle

Product Code	Product Name	Weight	
8298	HTS1501S-HSK A63	49.38 oz.	

Standard Equipment · Accessories
• Collet ø4.0 mm (CHA-4.0) • Collet Nut (CHN-AA) • Wrench (8 x 5), (9 x 11) : 1 pc. each • Filter Joint (FJ-01) • Hose (K-247) : ø6 mm x 13 ft

Product Code 8282 HTS1501S-HSK F63

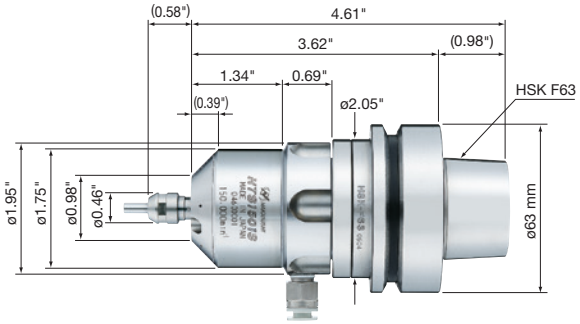

●HSK F63 taper shanks make this spindle very easy to attach to your machining centers. Very High speed milling is possible.

Air Turbine Spindle

Product Code	Product Name	Weight	
8282	HTS1501S-HSK F63	48.68 oz.	

Standard Equipment · Accessories
• Collet ø4.0 mm (CHA-4.0) • Collet Nut (CHN-AA) • Wrench (8 x 5), (9 x 11) : 1 pc. each • Filter Joint (FJ-01) • Hose (K-247) : ø6 mm x 13 ft

Product Code 8299 HTS1501S-M2040

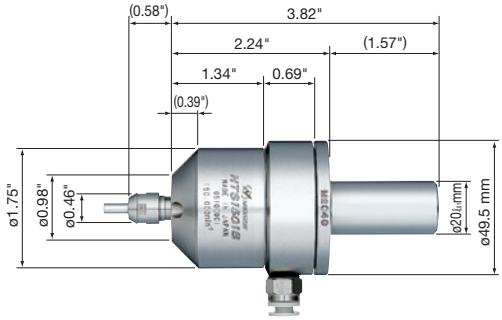

●Straight shanks make this spindle very easy to attach to smaller machining centers. Very High speed milling is possible.

Air Turbine Spindle

Product Code	Product Name	Weight	
8299	HTS1501S-M2040	25.04 oz.	

Standard Equipment · Accessories
• Collet ø4.0 mm (CHA-4.0) • Collet Nut (CHN-AA) • Wrench (8 x 5), (9 x 11) : 1 pc. each • Filter Joint (FJ-01) • Hose (K-247) : ø6 mm x 13 ft

Caution

● **Do not rotate the machining center's main spindle with the HTS1501 spindle installed.**

1
EmaxEVO
ESPERT
ROTUS
IMPULSE
PRESTO II
Sheenus ZERO
2
iSpeed3
E2000 ø1.0"/ø0.98"/ø0.897"
E3000 – One Piece
E3000 – Modular
ø1.18"
ø1.0"/ø0.98" ø0.897"
E3000 – 80,000rpm
E4000
3
MA
ø0.897"
ø1.0" ø0.98"
ø1.18"
MS
ø0.75" ø0.79"
ø0.87" ø0.91"
ø1.0" ø0.98"
4
HES
iSpeed5
HTS
HPS
PLANET
Xpeed
ABT
5
AIR LINE KIT
6
PARTS
7
TECHNICAL DATA
8
APPLICATION EXAMPLES
INDEX

*For dimensions of taper shanks, please see pages 4-p38-40.

*Order by product code.

Product Code 4502 AIR LINE KIT AL-M1202

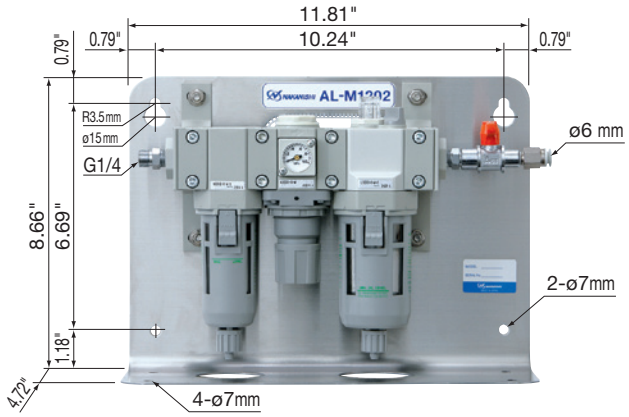

● The AL-M1202 provides simple, automatic conditioning of the air supplied to NAKANISHI Air Motors. The filter removes water and impure substances from the input air supply. The regulator maintains the proper air pressure, and the lubricator ensures proper oil flow to the motor and spindle. This Air Line Kit is wall mountable.

Air Line Kit (For ø6 mm Hose · **Filter Mesh 0.3 µm**)

Product Code	Product Name	Standard Equipment · Accessories	
4502	AL-M1202	• Air Filter • Air Regulator • Air Pressure Gauge • Lubricator • Air ON-OFF Valve • Hose for Piping (K-275) : 6 ft • Lubricating Oil (K-211) : 1 pc.	

LUBRICATING OIL

Lubricating Oil (4 oz.)

Product Code	Product Name	Product	
AA10478	K-211		

Lubricating Oil (32 oz.)

Product Code	Product Name	Product	
AA10480	K-202		

*Order by product code.

Fully Tool Changeable Air Motor Spindle.

HPS SERIES BT30

25,000 rpm Output : 77W

50,000 rpm Output : 51W



HPS SERIES CAT40

25,000 rpm Output : 77W

50,000 rpm Output : 51W

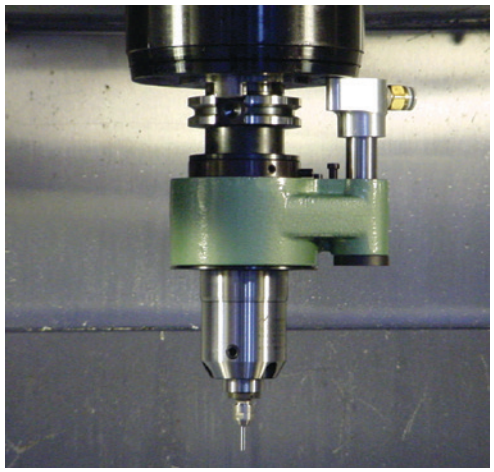



1
EmaxEVO
ESPERT
ROTUS
IMPULSE
PRESTO II
Sheenus ZERO
2
iSpeed3
E2000 ø1.0"/ø0.98"/ø0.897"
E3000 – One Piece
E3000 – Modular ø1.18"
ø1.0"/ø0.98" ø0.897"
E3000 – 80,000rpm
E4000
3
MA ø0.897"
ø1.0" ø0.98"
ø1.18"
MS ø0.75" ø0.79"
ø0.87" ø0.91"
ø1.0" ø0.98"
4
HES
iSpeed5
HTS
HPS
PLANET
Xpeed
ABT
5
AIR LINE KIT
6
PARTS
7
TECHNICAL DATA
8
APPLICATION EXAMPLES
INDEX

1
EmaxEVO
ESPERT
ROTUS
IMPULSE
PRESTO II
Sheenus ZERO
2
iSpeed3
E2000 ø1.0"/ø0.98"/ø0.897"
E3000 – One Piece
E3000 – Modular
ø1.18"
ø1.0"/ø0.98" ø0.897"
E3000 – 80,000rpm
E4000
3
MA
ø0.897"
ø1.0" ø0.98"
ø1.18"
MS
ø0.75" ø0.79"
ø0.87" ø0.91"
ø1.0" ø0.98"
4
HES
iSpeed5
HTS
HPS
PLANET
Xpeed
ABT
5
AIR LINE KIT
6
PARTS
7
TECHNICAL DATA
8
APPLICATION EXAMPLES
INDEX

HPS Series Features

25,000 & 50,000 rpm
Meets micro mill and drill manufacturers spindle speed requirements for many applications where small hole drilling and light milling are required.

Uninterrupted Machining
Fully tool changeable spindles for transfer from the machine magazine to the main spindle without the need to connect the air supply.

High Precision Spindle
All Spindles are guaranteed to be less than 1um T.I.R. at the spindle taper, allowing for excellent surface finish and extended tool life. True High Speed Machining can be achieved with the high speed and accuracy of the HPS250 / 500.

Minimal Thermal Growth
Constant cooling and lubrication of the spindle and motor ensures minimal thermal growth, which promotes extremely high accuracy and long bearing life.

Integral Motor and Spindle
The motor and spindle are built as a single unit to minimize length and weight for usage on a wide variety of machines. Spindle and motor constructed of precision ground SUS-416.

Minimal Vibration
Gearless operation eliminates heat and vibration affording high RPM for micro milling and micro drilling of all materials. Helps extend spindle bearing and cutting tool life.

Dedicated Air System
Our Air Line Kit provides lubricated air to cool, purge and lubricate the motor and spindle for extended machining operations that are typical for high speed machining. Unused lubrication oil is returned to the reservoir.

No Main Spindle Wear
Machines main spindle is used only to hold the HPS Spindle, providing longer main spindle life. Running a machine spindle at the machines maximum rpm for extended periods of time will severely affect the machines spindle longevity.

Positioning Block
We provide the positioning block to mate the HPS spindle with the machine. Several designs are available depending on the machine manufacturer and machine model and year of manufacture.

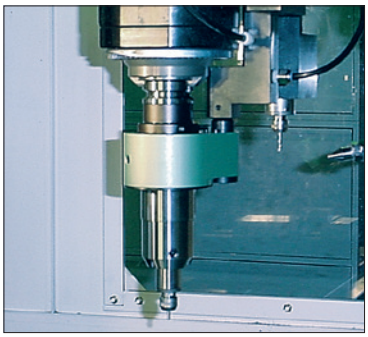

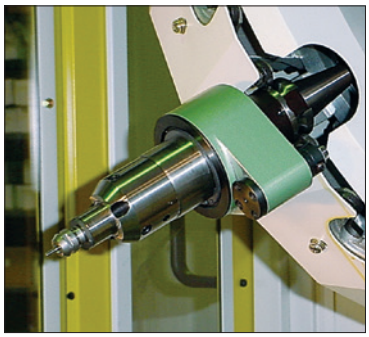



⚠ Caution
Do not rotate the main spindle when in use.
Damage to the spindle will result as well as danger to the operator

HPS250 Series Specifications

- Speed ····· 25,000 rpm) (73PSI)
- Max. Output Power ····· 77W (73PSI)
- Proper Air Pressure ····· 73PSI
- Air Consumption ····· 6.36CFM
- Spindle Accuracy ····· Within 1 μm
- Standard Size Collet (CHK-3.175) ····· ø1/8"

< Optional >

- Collet (CHK-[]) ····· ø0.5 mm~ø6.35 mm
  (See Page 6-p3 for details)
- Grindstone Arbor (AGM-03) ····· For grinding wheel with I.D. of ø5 mm

HPS250 Series Torque-Speed Characteristics

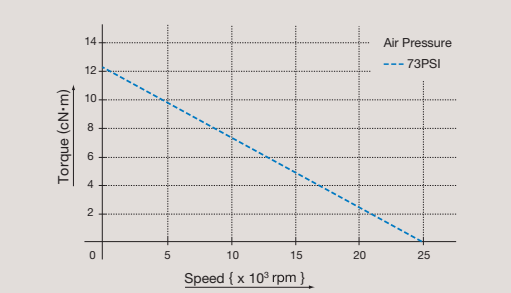

HPS500 Series Specifications

- Speed ····· 50,000 rpm) (73PSI)
- Max. Output Power ····· 51W (73PSI)
- Proper Air Pressure ····· 73PSI
- Air Consumption ····· 5.12CFM
- Spindle Accuracy ····· Within 1 μm
- Standard Size Collet (CHA-3.175) ····· ø1/8"

< Optional >

- Collet (CHA-[]) ····· ø0.5 mm~ø4.0 mm
  (See Page 6-p2 for details)
- Grindstone Arbor (AGM-01A) ····· For grinding wheel with I.D. of ø5 mm

HPS500 Series Torque-Speed Characteristics

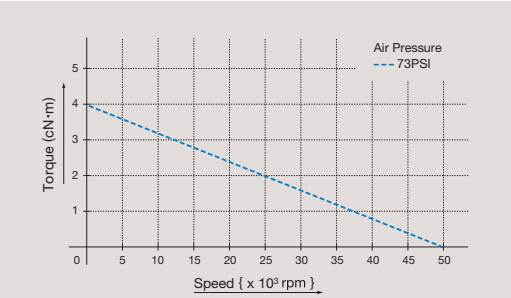

HPS System Example

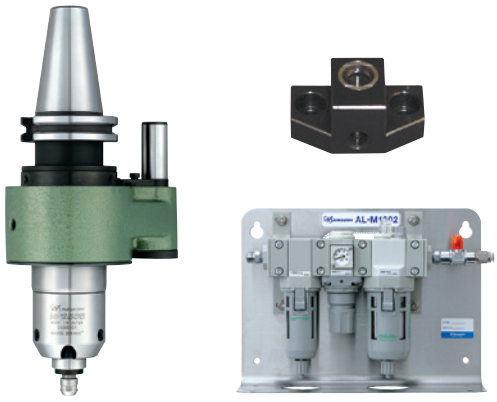

HPS System Example

Description	Product Code	Product Name	
50,000 rpm Spindle with CAT40	HPS10	HPS500-CAT40A	
Generic Block	BLC2	GB40	
Air Line Kit	4502	AL-M1202	
		Total	

BT30

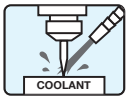

HPS Series can be used in conjunction with water or oil based coolants.

Note : Dimensions shown on this page are all in metric (mm). Please divide them by 25.4 for conversion to inch.

HPS250-BT30 / HPS500-BT30

HPS250-BT30A

Spindle Key relationship to Driven Pin 0° fixed position

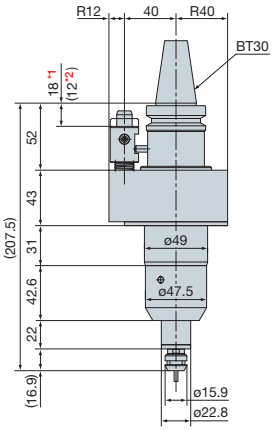

HPS250-BT30B

Spindle Key relationship to Driven Pin 45° , -45°

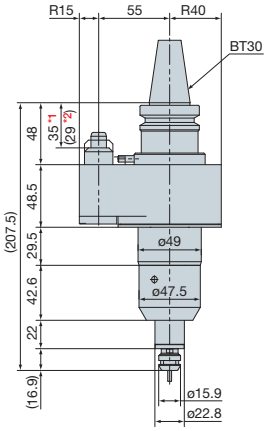

HPS250-BT30C

Spindle Key relationship to Driven Pin 90°, 180°, 270°, 360°

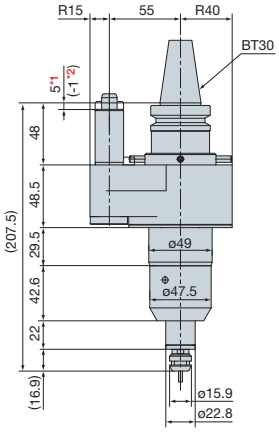

Air Motor Spindle : 25,000 rpm

*1: Compressed Position *2: Free Position

Type	Product Code	Product Name	Standard Equipment · Accessories	Weight	
A	7005	HPS250-BT30A	• Collet ø1/8" (CHK-3.175) • Collet Nut (K-265) • Wrench (12 x 14) : 2 pcs.	6.83 lb.	
B	7006	HPS250-BT30B		6.61 lb.	
C	7007	HPS250-BT30C		6.83 lb.	

HPS500-BT30A

Spindle Key relationship to Driven Pin 0° fixed position

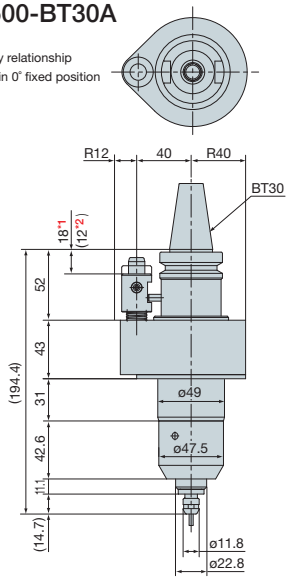

HPS500-BT30B

Spindle Key relationship to Driven Pin 45° , -45°

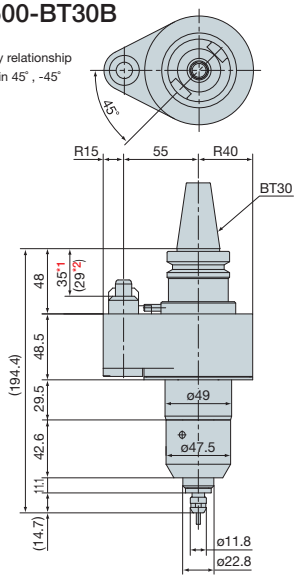

HPS500-BT30C

Spindle Key relationship to Driven Pin 90°, 180°, 270°, 360°

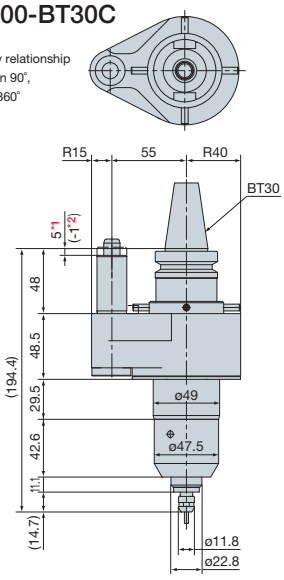

Air Motor Spindle : 50,000 rpm

*1: Compressed Position *2: Free Position

Type	Product Code	Product Name	Standard Equipment · Accessories	Weight	
A	7011	HPS500-BT30A	• Collet ø1/8" (CHA-3.175) • Collet Nut (CHN-A) • Wrench (8 x 5), (10 x 10) : 1 pc. each	6.83 lb.	
B	7012	HPS500-BT30B		6.61 lb.	
C	7013	HPS500-BT30C		6.83 lb.	

***Call NSK America at 800-585-4675 for the correct HPS Spindle for your machines builder and model.**

CAT40

COOLANT

Note : Dimensions shown on this page are all in metric (mm). Please divide them by 25.4 for conversion to inch.

HPS250-CAT40 / HPS500-CAT40

HPS250-CAT40A

Spindle Key relationship to Driven Pin 360° rotation position

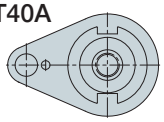

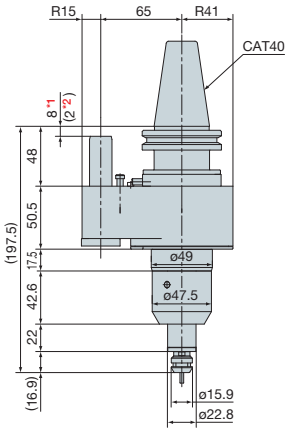

HPS250-CAT40B

Spindle Key relationship to Driven Pin 360° rotation position

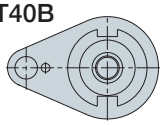

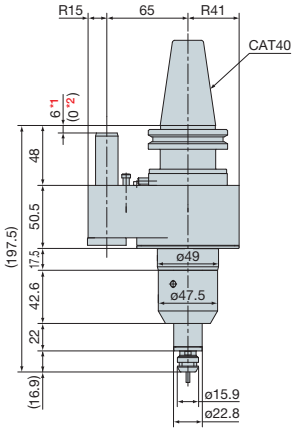

HPS250-CAT40C

Spindle Key relationship to Driven Pin 360° rotation position

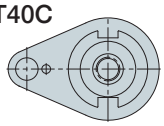

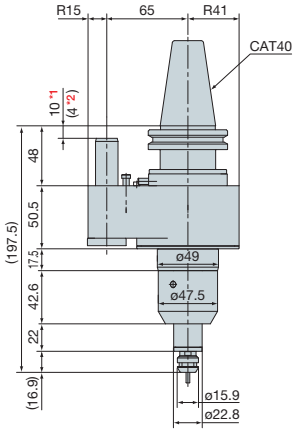

Air Motor Spindle : 25,000 rpm

*1: Compressed Position *2: Free Position

Type	Product Code	Product Name	Standard Equipment · Accessories	Weight	
A	7008	HPS250-CAT40A	• Collet ø1/8" (CHK-3.175) • Collet Nut (K-265) • Wrench (12 x 14) : 2 pcs.	7.94 lb.	
B	7009	HPS250-CAT40B		7.94 lb.	
C	7010	HPS250-CAT40C		7.94 lb.	

HPS500-CAT40A

Spindle Key relationship to Driven Pin 360° rotation position

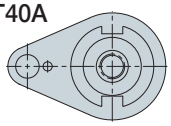

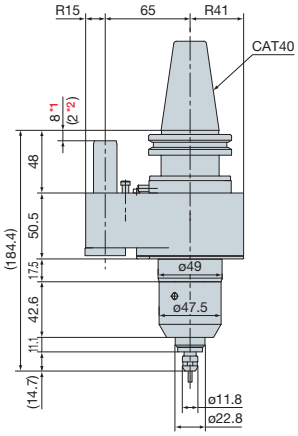

HPS500-CAT40B

Spindle Key relationship to Driven Pin 360° rotation position

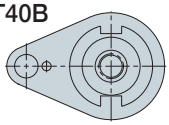

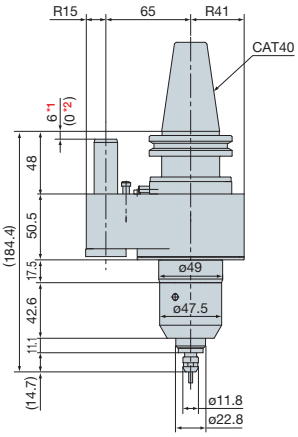

HPS500-CAT40C

Spindle Key relationship to Driven Pin 360° rotation position

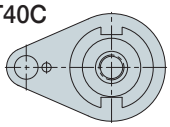

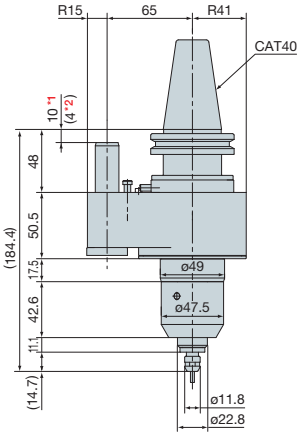

Air Motor Spindle : 50,000 rpm

*1: Compressed Position *2: Free Position

Type	Product Code	Product Name	Standard Equipment · Accessories	Weight	
A	7014	HPS500-CAT40A	• Collet ø1/8" (CHA-3.175) • Collet Nut (CHN-A) • Wrench (8 x 5), (10 x 10) : 1 pc. each	7.94 lb.	
B	7015	HPS500-CAT40B		7.94 lb.	
C	7016	HPS500-CAT40C		7.94 lb.	

*For dimensions of taper shanks, please see pages 4-p38-40.

*Order by product code.

Control System Chart

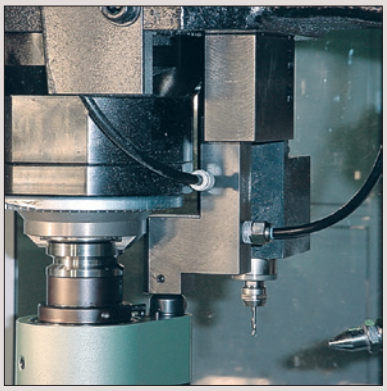

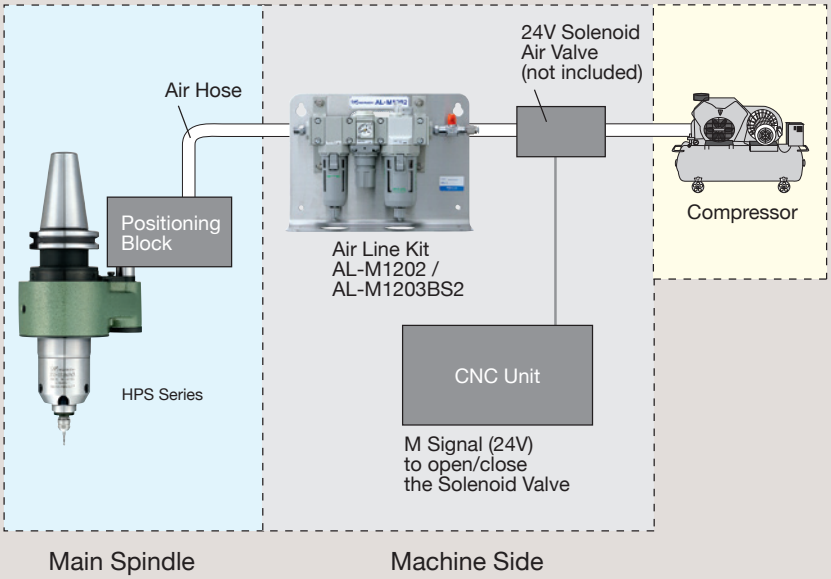

Positioning Block

■ Generic Block *Sub-plate to be prepared by the end-user to adjust distance between gauge line and spindle flange.

Product	Description	Product Code	Product Name		
	Block for BT30 Taper	BLC1	GB30		
	Block for CAT40 Taper	BLC2	GB40		

■ Special Block for Haas Machines

Product	Description	Product Code	Product Name		
	Block for Haas Machine	BLC3	SBHS		

■ Special Block for Fanuc Machines

Product	Description	Product Code	Product Name		
	Block for Robodrill	BLC4	SBFS		

■ Customized Special Block

Product	Description	Product Code	Product Name		
	to be designed for your machine	–	—		

Product Code 4502 AIR LINE KIT AL-M1202

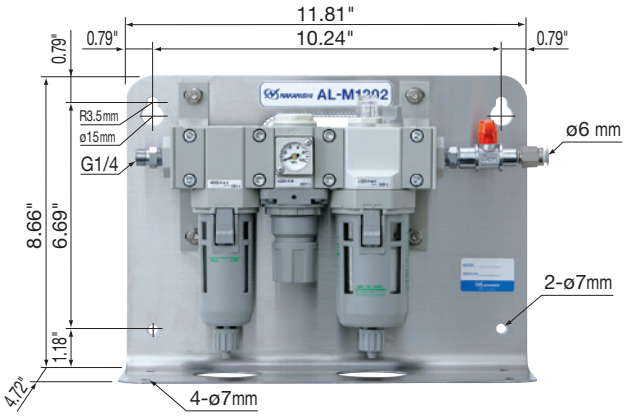

●The AL-M1202 provides simple, automatic conditioning of the air supplied to NAKANISHI Air Motors. The filter removes water and impure substances from the input air supply. The regulator maintains the proper air pressure, and the lubricator ensures proper oil flow to the motor and spindle. This Air Line Kit is wall mountable.

Air Line Kit (For ø6 mm Hose · Filter Mesh 0.3 µm)

Product Code	Product Name	Standard Equipment · Accessories	
4502	AL-M1202	• Air Filter • Air Regulator • Air Pressure Gauge • Lubricator • Air ON-OFF Valve • Hose for Piping (K-275) : 6 ft • Lubricating Oil (K-211) : 1 pc.	

Product Code 4503 AIR LINE KIT AL-M1203BS2

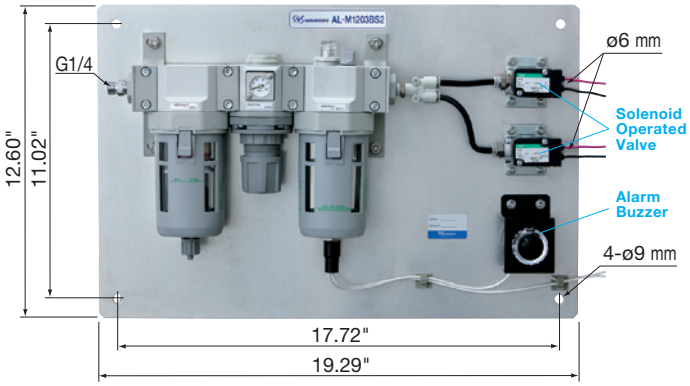

●The AL-M1203BS2 is equipped with 2 (DC+24V) Air Solenoids, a large capacity filter, large capacity oil reservoir, high flow regulator and a low oil level warning alarm, making this unit ideal for use on CNC machines. This Air Line Kit allows for the operation of 2 Air Motors.

Air Line Kit (For ø6 mm Hose · Filter Mesh 0.3 µm)

Product Code	Product Name	Standard Equipment · Accessories	
4503	AL-M1203 BS2	• Air Filter • Air Regulator • Air Pressure Gauge • Lubricator • Solenoid Valve (DC 24V) : 2 pcs. • Buzzer (DC 24V) • Hose for Piping (K-275) : 6 ft • Lubricating Oil (K-202) : 1 pc.	

LUBRICATING OIL

●Chevron Superla #9 lubrication oil, available from NSK America, is highly recommended for use with the above air line kits.

Lubricating Oil (4 oz.)

Product Code	Product Name	Product	
AA10478	K-211		

Lubricating Oil (32 oz.)

Product Code	Product Name	Product	
AA10480	K-202		

1
EmaxEVO
ESPERT
ROTUS
IMPULSE
PRESTO II
Sheenus ZERO
2
iSpeed3
E2000 ø1.0"/ø0.98"/ø0.897"
E3000 – One Piece
E3000 – Modular
ø1.18"
ø1.0"/ø0.98" ø0.897"
E3000 – 80,000rpm
E4000
3
MA
ø0.897"
ø1.0" ø0.98"
ø1.18"
MS
ø0.75" ø0.79"
ø0.87" ø0.91"
ø1.0" ø0.98"
4
HES
iSpeed5
HTS
HPS
PLANET
Xpeed
ABT
5
AIR LINE KIT
6
PARTS
7
TECHNICAL DATA
8
APPLICATION EXAMPLES
INDEX

Taper Shanks Dimensions

30

BT30

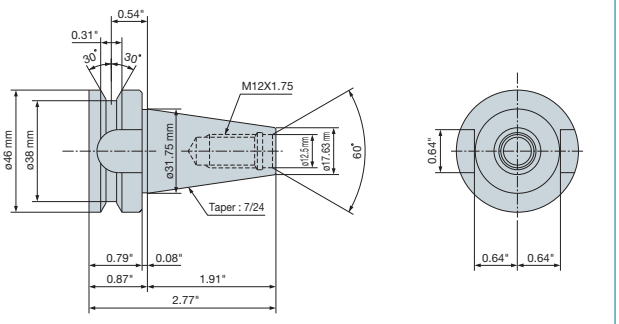

NT30 (M)

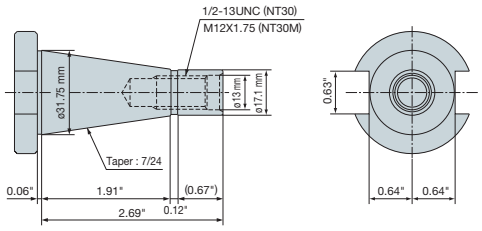

40

BT40

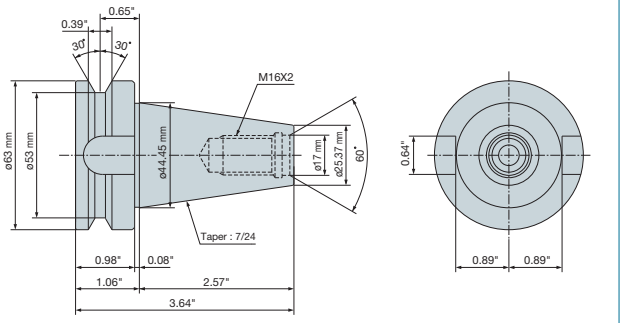

NT40 (M)

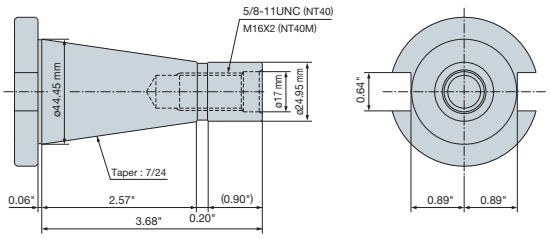

CAT40

ASME B5.50-1994

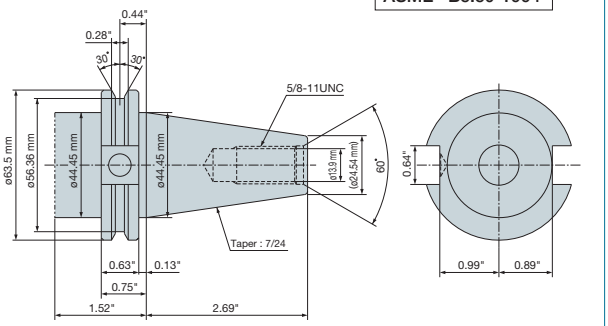

IT40

DIN698971 : 1995

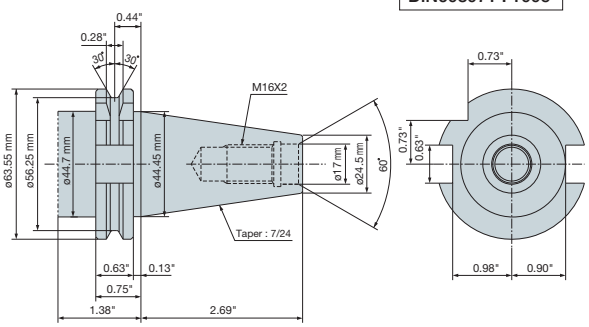

Taper Shanks Dimensions

50

BT50

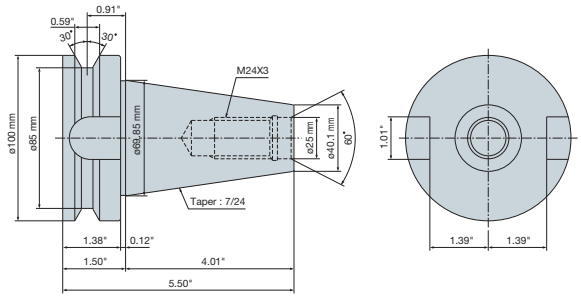

NT50 (M)

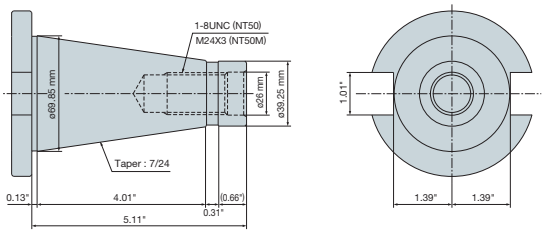

CAT50

ASME B5.50-1994

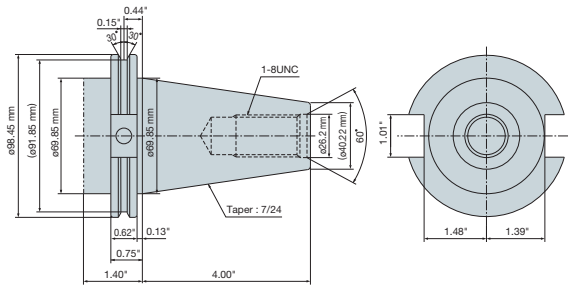

IT50

DIN698971 : 1995

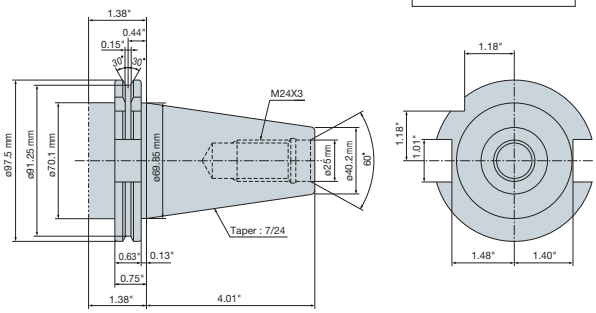

HSK A63

HSK A63

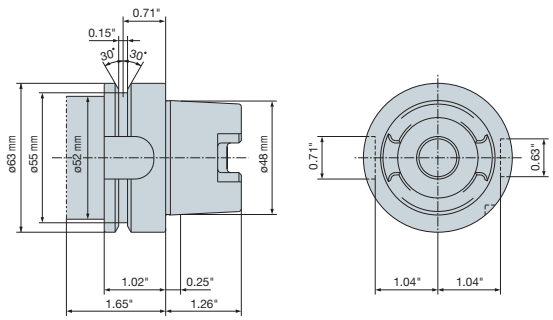

HSK A100

HSK A100

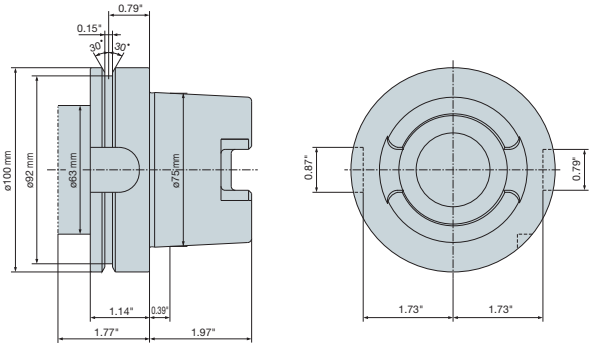

1
EmaxEVO
ESPERT
ROTUS
IMPULSE
PRESTO II
Sheenus ZERO
2
iSpeed3
E2000 ø1.0"/ø0.98"/ø0.897"
E3000 – One Piece
E3000 – Modular
ø1.18"
ø1.0"/ø0.98" ø0.897"
E3000 – 80,000rpm
E4000
3
MA
ø0.897"
ø1.0" ø0.98"
ø1.18"
MS
ø0.75" ø0.79"
ø0.87" ø0.91"
ø1.0" ø0.98"
4
HES
iSpeed5
HTS
HPS
PLANET
Xpeed
ABT
5
AIR LINE KIT
6
PARTS
7
TECHNICAL DATA
8
APPLICATION EXAMPLES
INDEX

Taper Shanks Dimensions

ST32

ST32

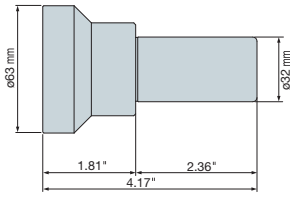

R8

R8

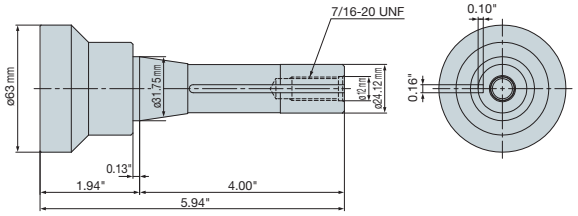

1
EmaxEVO
ESPERT
ROTUS
IMPULSE
PRESTO II
Sheenus ZERO
2
iSpeed3
E2000 ø1.0"/ø0.98"/ø0.897"
E3000 – One Piece
E3000 – Modular ø1.18"
ø1.0"/ø0.98" ø0.897"
E3000 – 80,000rpm
E4000
3
MA
ø0.897"
ø1.0" ø0.98"
ø1.18"
MS
ø0.75" ø0.79"
ø0.87" ø0.91"
ø1.0" ø0.98"
4
HES
iSpeed5
HTS
HPS
PLANET
Xpeed
ABT
5
AIR LINE KIT
6
PARTS
7
TECHNICAL DATA
8
APPLICATION EXAMPLES
INDEX

PLANET 600

65,000 rpm

- Turns a Milling Machine into a Jig Grinding Machine, a Lathe into Internal Grinding Machine.



1
EmaxEVO
ESPERT
ROTUS
IMPULSE
PRESTO II
Sheenus ZERO
2
iSpeed3
E2000 ø1.0"/ø0.98"/ø0.897"
E3000 – One Piece
E3000 – Modular
ø1.18"
ø1.0"/ø0.98" ø0.897"
E3000 – 80,000rpm
E4000
3
MA
ø0.897"
ø1.0" ø0.98"
ø1.18"
MS
ø0.75" ø0.79"
ø0.87" ø0.91"
ø1.0" ø0.98"
4
HES
iSpeed5
HTS
HPS
PLANET
Xpeed
ABT
5
AIR LINE KIT
6
PARTS
7
TECHNICAL DATA
8
APPLICATION EXAMPLES
INDEX

EASILY MOUNTED ON AVAILABLE BORING HEAD.

Typical application example of jig grinding after material hardening.



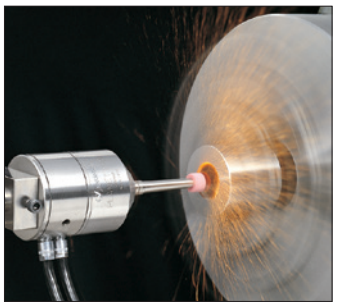

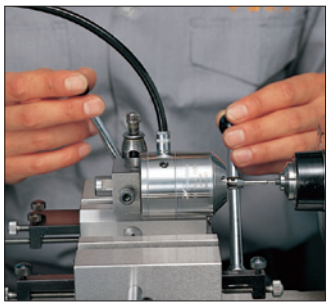

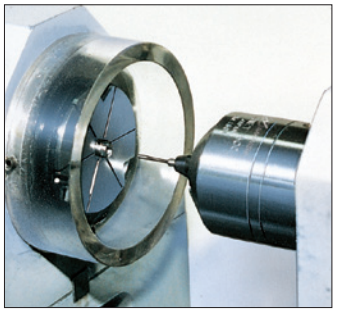

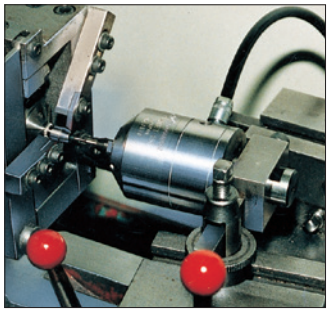

PLANET Series Features

- The PLANET 600 System has an adapted air exhaust system that keeps noise to a minimum.
- Excellent performance at a relatively low cost.
- Turns a milling machine or machining center into a Jig Grinding machine when attaching a standard adjustable boring head to the machine and utilizing the PLANET 600.
- When mounted in a turning center, the PLANET 600 can be used as a precision internal grinder.
- Can be used as a high speed grinder in specialty built machines.
- Collets ranging from 0.5mm thru 6.35mm are available to accommodate all the most common tool shanks.

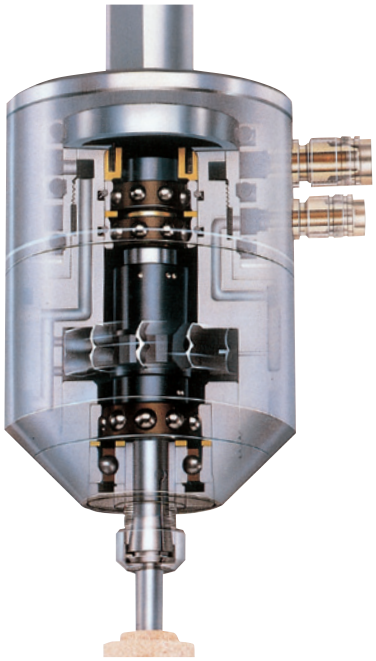

Special Built-In type high speed bearings will withstand extended periods of operation.

Ultra Precision ball bearing technology has been developed due to several years of cooperative studies between Nakanishi and several major bearing manufacturers.

PLANET Series Connection Drawing

Clean, lubricated, and regulated air is required for PLANET Series spindles. Please refer to the diagram to the right for proper connections. AL-M1202 incorporates a filter, regulator and lubricator to provide the appropriate air.



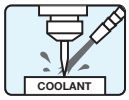

PLANET Series can be used in conjunction with water or oil based coolants.

PLANET 600 — 65,000 rpm

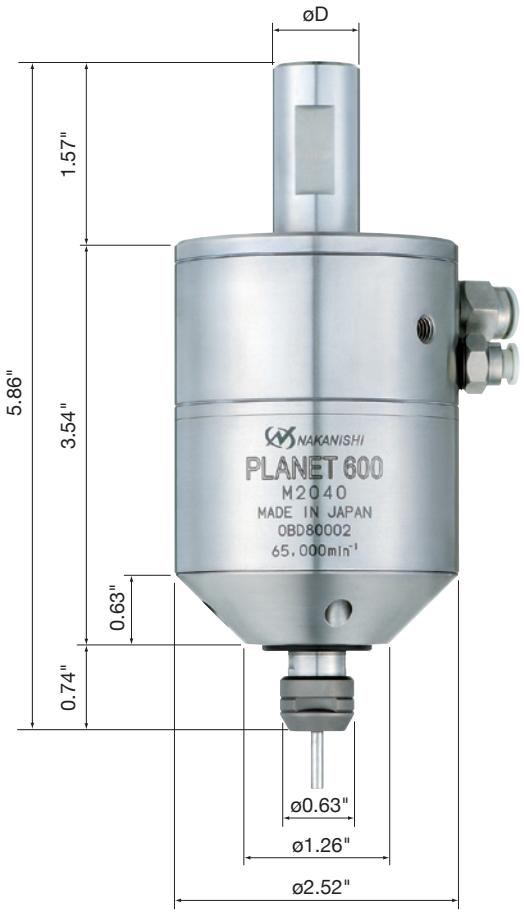

Straight Shank : ø20mm, ø3/4"

- **Makes Jig Grinding possible for small and large diameter holes (~ø2.76").**

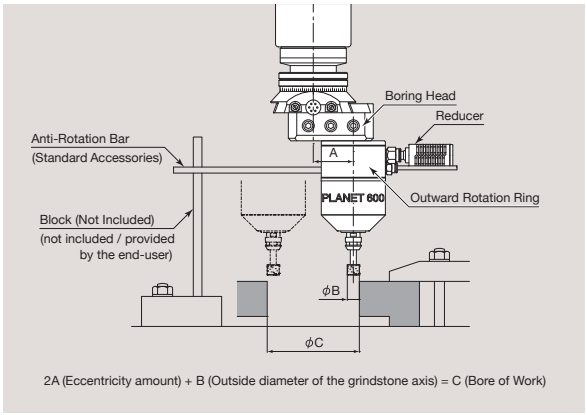

2A (Eccentricity amount) + B (Outside diameter of the grindstone axis) = C (Bore of Work)

Processable Range

Max. Processable Diameter	ø2.76"
Max. Processable Depth	2.36"
Max. Grindstone Diameter	ø0.63"

- Spe e d ..... 65,000 rpm
- Air Input ..... Side Air Supply
- Proper Air Pressure ..... 58 PSI
- Air Consumption ..... 6.18 CFM
- Spindle Accuracy ..... Within 1 µm
- Hose Diameter (Air Intake) ..... ø6 mm (O.D.)

< Optional >

- Collet (CHK-[][]) ..... ø0.5 mm~ø6.35 mm (See Page 6-p3 for details)
- Collet Nut K-265

Note : CHK Collet is sold separately.

Product Code	Shank øD	Product Name	Standard Equipment · Accessories	Weight	
7355	ø20mm x 1.57"	PL600-M2040	• Collet Nut (K-265) : 1 pc. • Intake Air Hose (K-254) with Filter Joint (FJ-01) : ø6 mm x 6 ft : 1 pc. • Silencer : 1 pc. • Anti-Rotation Bar : 1 set • Wrench (12 x 14) : 2 pcs.	3 lb.13.38 oz.	
7356	ø3/4" x 1.57"	PL600-H3440		3 lb.13.20 oz.	

Product Code 4502 AIR LINE KIT AL-M1202

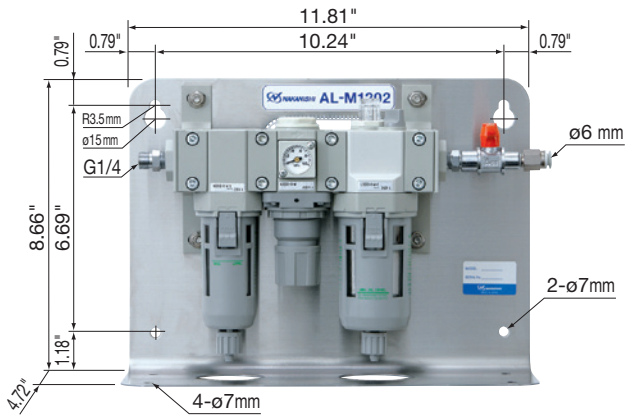

● The AL-M1202 provides simple, automatic conditioning of the air supplied to NAKANISHI Air Motors. The filter removes water and impure substances from the input air supply. The regulator maintains the proper air pressure, and the lubricator ensures proper oil flow to the motor and spindle. This Air Line Kit is wall mountable.

Air Line Kit (For ø6 mm Hose · **Filter Mesh 0.3 µm**)

Product Code	Product Name	Standard Equipment · Accessories	
4502	AL-M1202	• Air Filter • Air Regulator • Air Pressure Gauge • Lubricator • Air ON-OFF Valve • Hose for Piping (K-275) : 6 ft • Lubricating Oil (K-211) : 1 pc.	

LUBRICATING OIL

Lubricating Oil (4 oz.)

Product Code	Product Name	Product	
AA10478	K-211		

Lubricating Oil (32 oz.)

Product Code	Product Name	Product	
AA10480	K-202		

1
EmaxEVO
ESPERT
ROTUS
IMPULSE
PRESTO II
Sheenus ZERO
2
iSpeed3
E2000
ø1.0"/ø0.98"/ø0.897"
E3000
– One Piece
E3000
– Modular
ø1.18"
ø1.0"/ø0.98"
ø0.897"
E3000
– 80,000rpm
E4000
3
MA
ø0.897"
ø1.0"
ø0.98"
ø1.18"
MS
ø0.75"
ø0.79"
ø0.87"
ø0.91"
ø1.0"
ø0.98"
4
HES
iSpeed5
HTS
HPS
PLANET
Xpeed
ABT
5
AIR LINE KIT
6
PARTS
7
TECHNICAL DATA
8
APPLICATION EXAMPLES
INDEX

1
EmaxEVO
ESPERT
ROTUS
IMPULSE
PRESTO II
Sheenus ZERO
2
iSpeed3
E2000
ø1.0"/ø0.98"/ø0.897"
E3000
– One Piece
E3000
– Modular
ø1.18"
ø1.0"/ø0.98"
ø0.897"
E3000
– 80,000rpm
E4000
3
MA
ø0.897"
ø1.0"
ø0.98"
ø1.18"
MS
ø0.75"
ø0.79"
ø0.87"
ø0.91"
ø1.0"
ø0.98"
4
HES
iSpeed5
HTS
HPS
PLANET
Xpeed
ABT
5
AIR LINE KIT
6
PARTS
7
TECHNICAL DATA
8
APPLICATION EXAMPLES
INDEX

Air-Turbine

Air Bearing

Xpeed1600

160,000 rpm Output : 56W

<Flange Mount>
Outside Diameter ø1.57"(ø40 mm)

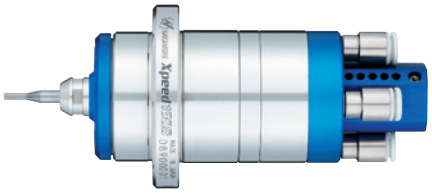

Xpeed1200

120,000 rpm Output : 192W

<Flange Mount>
Outside Diameter ø2.56"(ø65 mm)



◀AIR BEARING▶ Xpeed Series

Xpeed1600 160,000 rpm Output 56W
Xpeed1200 120,000 rpm Output 192W

- Ideal for extremely high precision, small diameter machining applications.
- Air bearings use compressed air blown into a small gap between the spindle and the bearing surface. The spindle floats on an even cushion of compressed air. This non-contact type of bearing means the spindle has a very long service life because of low friction and wear ; it also means that the spindle generates almost no heat or vibration.
- The spindle and bearing are finished with a very high-accuracy process to ensure extremely low vibration and very high rotating accuracy.

Xpeed Series Connection Drawing

The Xpeed Series motor and spindle require dry, clean, regulated air.
Please refer to the drawing for proper components.

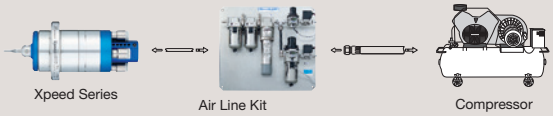

Principle of Air Bearing

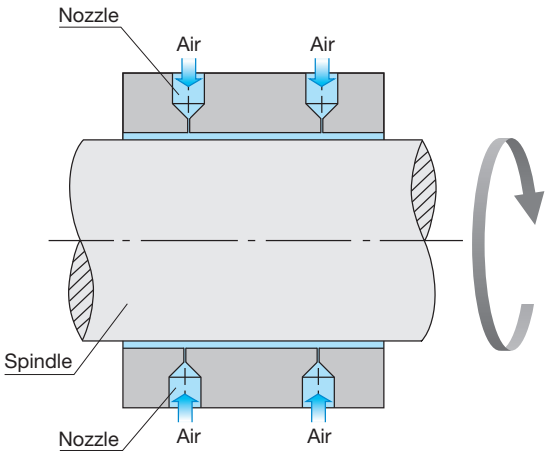

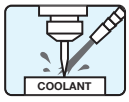

Xpeed Series can be used in conjunction with water or oil based coolants.

Product Code 1855 **Xpeed1600** **O. D. ø1.57"(ø40 mm) <Output 56W>** **160,000 rpm**

Flange Mount

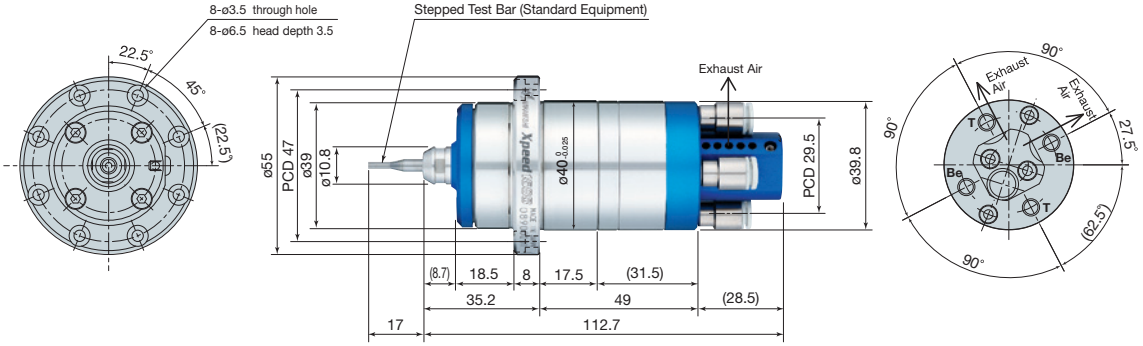

< Specifications >

Spindle Accuracy :	Within 1 µm
Standard Size Collet (CHA-4.0AA) :	ø4.0 mm
Main body mount method :	Flange mounting method,
	M3 bolt (8 locations, 45° Angle, PCD47)
Bearing Type :	Static Air Bearing
Proper Air Pressure for Air Bearing :	87 PSI
Air Consumption for Air Bearing :	1.41 CFM
Proper Air Pressure for Air Turbine :	22~65 PSI
Air Consumption for Air Turbine :	5.65 CFM
Bearing Load Capacity :	Radial : Less than 15N
	Thrust : Less than 25N
	(Bearing Air supply pressure 87 PSI)
Useable Max. Diameter of Grindstone :	Less than ø2.0 mm (For ø4.0 mm shank)
Hose Diameter :	Bearing supply ø4 mm (2 locations)
	Turbine Air supply ø6 mm (2 locations)
Others :	Detection of Rotation Speed Mark

• Torque & Output Power Characteristic

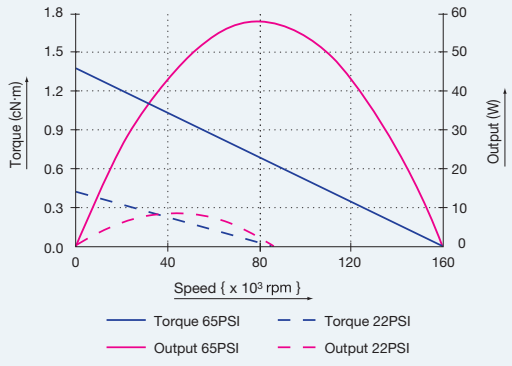

< Optional >

Collet (CHA-[][]AA) : ø3.0 mm, ø1/8", ø4.0 mm (See Page 6-p2 for details)

Product Code	Product Name	Speed	Max. Output	Weight	
1855	Xpeed1600	160,000 rpm	56W	1 lb. 2.34 oz.	Call For Details. (Factory Order)

Standard Equipment · Accessories	• Collet ø4.0 mm (CHA-4.0AA) • Collet Nut (CHN-3A) • ø4 mm Hose (transparent 4.5 ft) : 1 pc. • ø6 mm Hose (blue 4.5 ft) : 1 pc. • ø6 mm Air Plug : 2 pcs. • ø4 mm Air Plug : 2 pcs. • Stepped Test Bar (ø2.0 mm x ø4.0 mm x 34L) : 1 pc. • Bar Wrench (K-277) : 1 pc. • Torque Wrench (10 mm) : 1 pc. • Allen Wrench (2 mm) : 1 pc. • Hexagon Socket Button Head Bolt (M3 x 5L) : 1 pc. • Gasket (for M3 Screw) : 1 pc.

*Call NSK America at 800-585-4675 for the correct Xpeed Spindle for your machines builder and model.

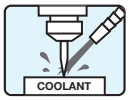

Note : Dimensions shown on this page are all in metric (mm). Please divide them by 25.4 for conversion to inch.

Product Code 1854 Xpeed1200 O. D. ø2.56"(ø65 mm) <Output 192W> 120,000 rpm

Flange Mount

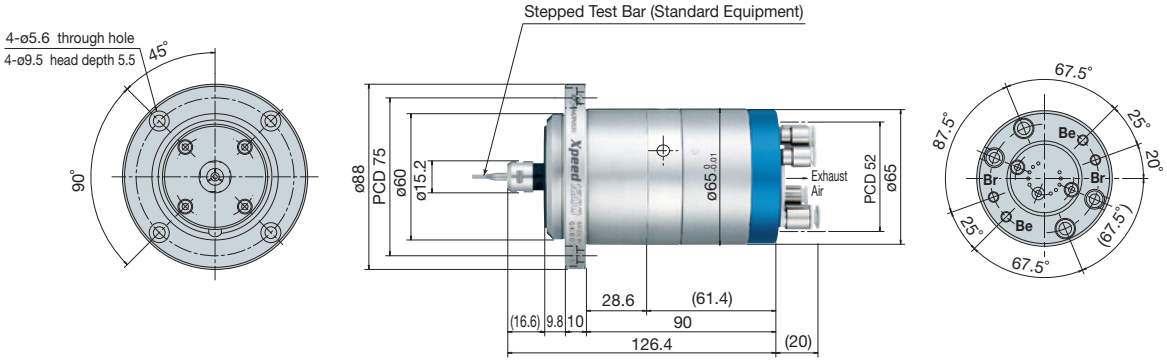

< Specifications >

Spindle Accuracy :	Within 1 μm
Standard Size Collet (CHK-4.0AA) :	ø4.0 mm
Main body mount method :	Flange mounting method,
	M5 bolt (4 locations, 90° Angle, PCD75)
Bearing Type :	Static Air Bearing
Proper Air Pressure for Air Bearing :	87 PSI
Air Consumption for Air Bearing :	2.83 CFM
Proper Air Pressure for Air Turbine :	35~75 PSI
Air Consumption for Air Turbine :	10.60 CFM
Bearing Load Capacity :	Radial : Less than 25N
	Thrust : Less than 70N
	(Bearing Air supply pressure 87 PSI)
Useable Max. Diameter of Grindstone :	Less than ø2.0 mm (For ø4.0 mm shank)
Hose Diameter :	Bearing supply ø6 mm (2 locations)
	Break Air supply ø6 mm (2 locations)
	Turbine Air supply ø6 mm (2 locations)
Others :	Detection of Rotation Speed Mark

< Optional >

Collet (CHK-[][]AA) : ø3.0 mm, ø1/8", ø4.0 mm, ø6.0 mm, ø1/4" (See Page 6-p3 for details)

• Torque & Output Power Characteristic

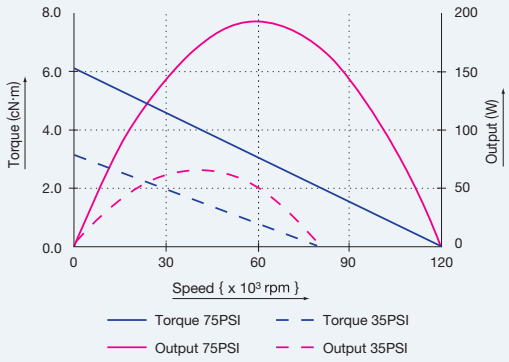

Product Code	Product Name	Speed	Max. Output	Weight	
1854	Xpeed1200	120,000 rpm	192W	5 lb. 1.13 oz.	Call For Details. (Factory Order)

Standard Equipment · Accessories	• Collet ø4.0 mm (CHK-4.0AA) • Collet Nut (K-265A) • ø6 mm Hose (transparent 6 ft) : 1 pc. • ø6 mm Hose (blue 6 ft) : 1 pc. • ø6 mm Air Plug : 6 pcs. • Stepped Test Bar (ø2.0 mm x ø4.0 mm x 34L) : 1 pc. • Wrench (12 x 14) : 1 pc. • Torque Wrench (14 mm) : 1 pc.

⚠ Caution

- Air bearing spindles require clean dry air for proper operation.
- Never rotate the spindle, change cutting tools or collet without supplying clean, dry air to the bearing surfaces.
- Always supply clean, dry air to the bearing surfaces even when the spindle is not being rotated.
- Do not start the machine process until after stable rotation has been established and verified.

Product Code 1548 AIR LINE KIT AL-A0611

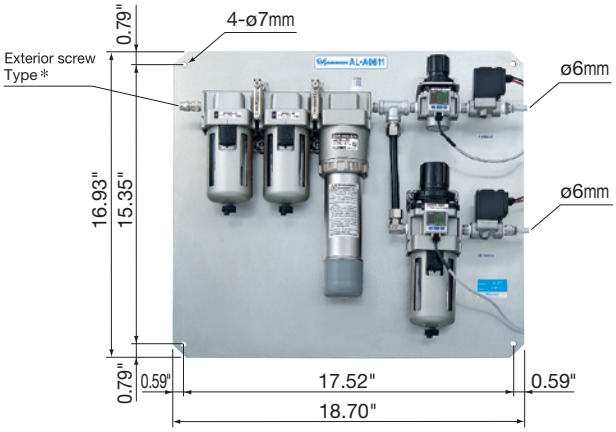

- The AL-A0611 is a high filtered Air Line Kit utilizing a *0.01µm micro mist filter system.
- This Air Line Kit is highly recommended for use on all Xpeed Series Air Turbine / Air Bearing motor/spindles.

*Exterior screw Type (Model KK13P-02M by SMC Corporation)

Air Line Kit (For ø6 mm Hose · **Filter Mesh 0.01 µm**)

Product Code	Product Name	Standard Equipment · Accessories	
1548	AL-A0611	• Mist Separator • Micro Mist Separator • Membrane Air Dryer • Regulator • Solenoid Valve • Digital Pressure Switch	

Fit to

Spindle	Xpeed1600 · Xpeed1200

Product Code 4505 AIR LINE KIT AL-A1205

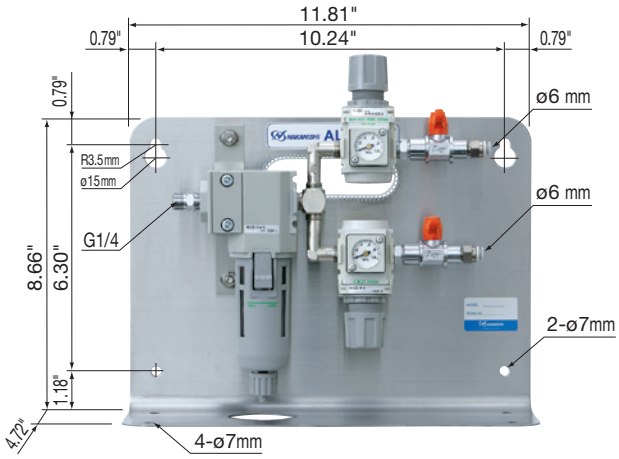

- This unit is also designed for use on Air Turbine / Air Bearing Motor/Spindles such as the Xpeed1600. One air output drives the Air Turbine Motor. The other air output drives the Air Bearing Spindle.
- Always supply air to the Air Bearing Spindle before starting the Air Turbine Motor. When stopping the spindle, always stop the Air Turbine Motor before removing the air from the Air Bearing Spindle.

Air Line Kit (For ø6 mm Hose · **Filter Mesh 0.3 µm**)

Product Code	Product Name	Standard Equipment · Accessories	
4505	AL-A1205	• Air Filter • Air Regulator • Air Pressure Gauge • Air ON-OFF Valve • Hose for Piping (K-275) : 6 ft	

Fit to

Spindle	Xpeed1600

*Order by product code.

ABT-1000

100,000 rpm Output : 88W

<Straight Type>
Outside Diameter ø1.57"(ø40 mm)



Features

- Ideal for extremely high precision, small diameter machining applications.
- Air bearings use compressed air blown into a small gap between the spindle and the bearing surface. The spindle floats on an even cushion of compressed air. This non-contact type of bearing means the spindle has a very long service life because of low friction and wear ; it also means that the spindle generates almost no heat or vibration.
- The spindle and bearing are finished with a very high-accuracy process to ensure extremely low vibration and very high rotating accuracy.
- The ABT Series are equipped with a Rotational Speed Detection Sensor. When in operation, a digital pulse signal representing the RPM can be output. The rotation speed and load condition can be monitored using a high performance, locally available speed meter.

Principle of Air Bearing

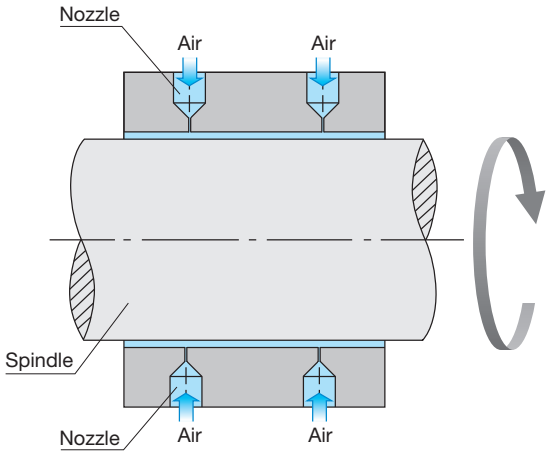

ABT Series Connection Drawing

The ABT Series motor and spindle require dry, clean, regulated air.
Please refer to the drawing for proper components.

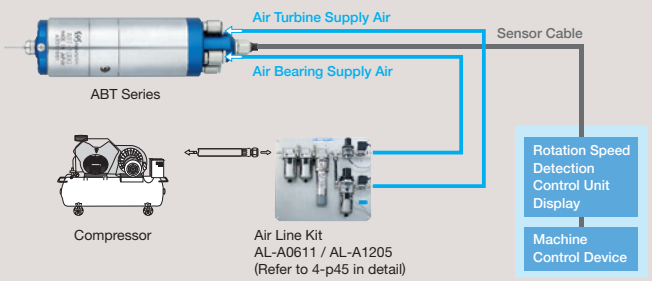

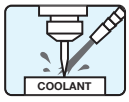

ABT Series can be used in conjunction with water or oil based coolants.

Note : Dimensions shown on this page are all in metric (mm). Please divide them by 25.4 for conversion to inch.

Product Code 1856 ABT-1000 O. D. ø1.57"(ø40 mm) <Output 88W> 100,000 rpm

Straight Type

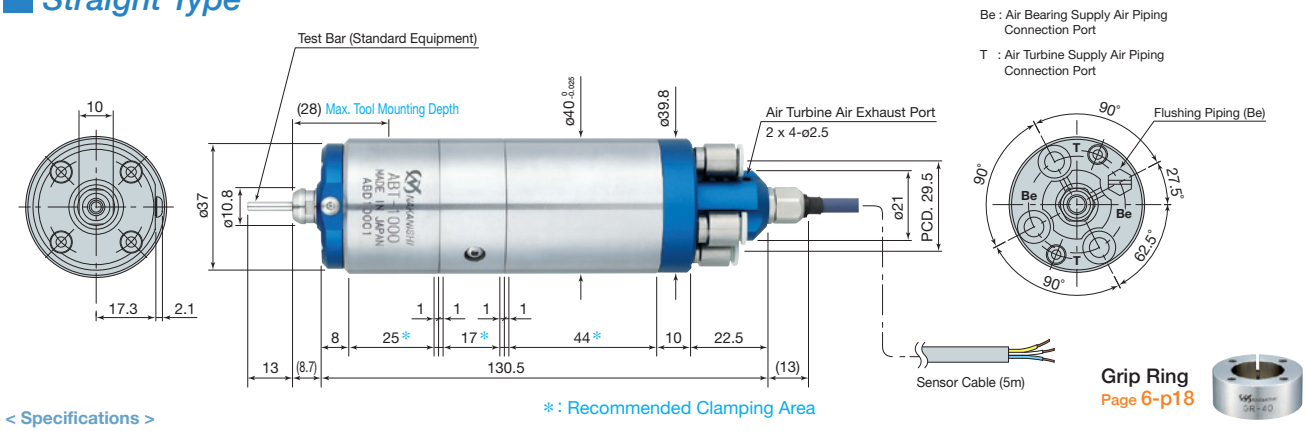

* : Recommended Clamping Area

Grip Ring
Page 6-p18

< Specifications >

Spindle Accuracy :	Within 1 µm
Standard Size Collet (CHA-3.175) :	ø1/8"
Main body mount method :	Outside Mounting Diameters clamp method
Bearing Type :	Static Air Bearing
Proper Air Pressure for Air Bearing :	80 PSI
Air Consumption for Air Bearing :	Less than 1.77 CFM
Proper Air Pressure for Air Turbine :	80 PSI
Air Consumption for Air Turbine :	4.24 CFM
Bearing Load Capacity :	Radial : Less than 20N
	Thrust : Less than 35N
	(Bearing Air supply pressure 80 PSI)
Useable Max. Diameter of Grindstone :	Less than ø2.0 mm (For ø4.0 mm shank)
Hose Diameter :	Bearing supply ø6 mm (1 location)
	Turbine Air supply ø6 mm (2 locations)
Others :	Rotational Speed Detection Sensor with
	5 meter cable

< Optional >

Collet (CHA-[][]) : ø0.5 mm ~ ø4.0 mm (See Page 6-p2 for details)

• Torque & Output Power Characteristic

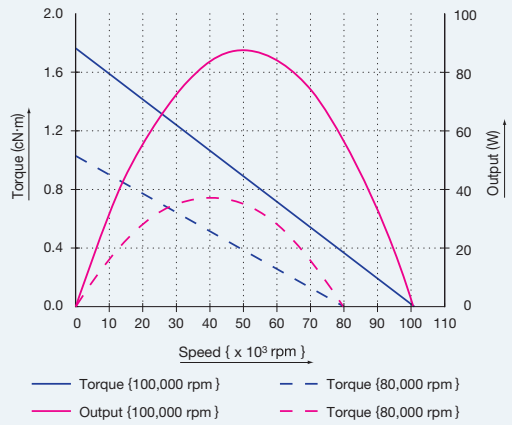

Product Code	Product Name	Speed	Max. Output	Weight	
1856	ABT-1000	100,000 rpm	88W	1 lb. 12.92 oz.	

Standard Equipment · Accessories	• Collet ø1/8" (CHA-3.175) • Collet Nut (CHN-3A) • Test Bar (ø3.0 mm x 40L) : 1 pc. • Bar Wrench (K-277) : 1 pc. • Wrench (10 x 10) : 1 pc. • Allen Wrench (2 mm) : 1 pc. • Hexagon Socket Button Head Bolt (M3 x 5L) : 1 pc. • Gasket (for M3 Screw) : 1 pc. • Protective Cover : 1 pc. • Connection Joint (KQ2S06-M5N) : 3 pcs. • Connection Joint (M-5P) : 1 pc. • Cap (K1020A223) : 1 pc.

⚠ Caution

- **Air bearing spindles require clean dry air for proper operation.**
- **Never rotate the spindle, change cutting tools or collet without supplying clean, dry air to the bearing surfaces.**
- **Always supply clean, dry air to the bearing surfaces even when the spindle is not being rotated.**
- **Do not start the machine process until after stable rotation has been established and verified.**

Product Code 1548 AIR LINE KIT AL-A0611

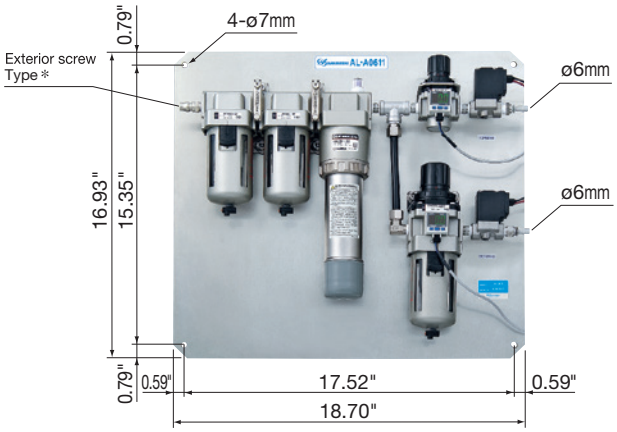

- The AL-A0611 is a high filtered Air Line Kit utilizing a *0.01µm micro mist filter system.
- This Air Line Kit is highly recommended for use on all ABT Series Air Turbine / Air Bearing motor/spindles.

*Exterior screw Type (Model KK13P-02M by SMC Corporation)

Air Line Kit (For ø6 mm Hose · **Filter Mesh 0.01 µm**)

Product Code	Product Name	Standard Equipment · Accessories	
1548	AL-A0611	• Mist Separator • Micro Mist Separator • Membrane Air Dryer • Regulator • Solenoid Valve • Digital Pressure Switch	

Fit to

Spindle	ABT-1000

Product Code 4505 AIR LINE KIT AL-A1205

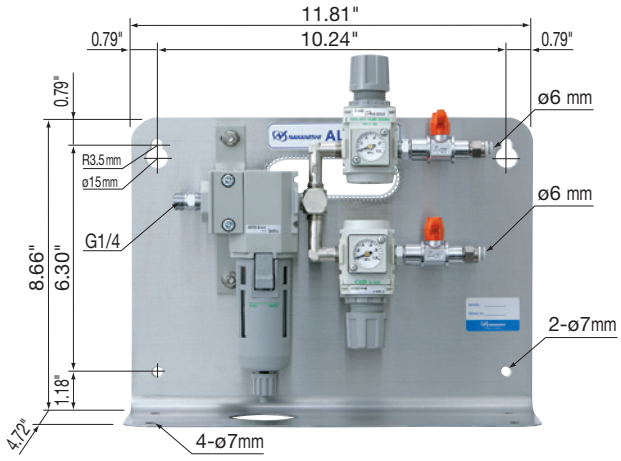

- This unit is also designed for use on Air Turbine / Air Bearing Motor/Spindles such as the ABT Series. One air output drives the Air Turbine Motor. The other air output drives the Air Bearing Spindle.
- Always supply air to the Air Bearing Spindle before starting the Air Turbine Motor. When stopping the spindle, always stop the Air Turbine Motor before removing the air from the Air Bearing Spindle.

Air Line Kit (For ø6 mm Hose · **Filter Mesh 0.3 µm**)

Product Code	Product Name	Standard Equipment · Accessories	
4505	AL-A1205	• Air Filter • Air Regulator • Air Pressure Gauge • Air ON-OFF Valve • Hose for Piping (K-275) : 6 ft	

Fit to

Spindle	ABT-1000

1
EmaxEVO
ESPERT
ROTUS
IMPULSE
PRESTO II
Sheenus ZERO
2
iSpeed3
E2000
ø1.0"/ø0.98"/ø0.897"
E3000
– One Piece
E3000
– Modular
ø1.18"
ø1.0"/ø0.98"
ø0.897"
E3000
– 80,000rpm
E4000
3
MA
ø0.897"
ø1.0"
ø0.98"
ø1.18"
MS
ø0.75"
ø0.79"
ø0.87"
ø0.91"
ø1.0"
ø0.98"
4
HES
iSpeed5
HTS
HPS
PLANET
Xpeed
ABT
5
AIR LINE KIT
6
PARTS
7
TECHNICAL DATA
8
APPLICATION EXAMPLES
INDEX

FOR HAND TOOLS

- AIR LINE KIT AL-H1206



- AIR LINE KIT AL-H1207F



- FOOT CONTROL AFC-45

＊Use Air Line Kit AL-H1207F, Product Code 4507 with this foot control.



FOR MACHINE SPINDLES

- AIR LINE KIT AL-C1204



- AIR LINE KIT AL-A1205



- AIR LINE KIT AL-M1202



- AIR LINE KIT AL-A0611



- AIR LINE KIT AL-M1203BS2



- **When using Air Motors, be sure to install either an NSK Air Line Kit shown below or a similar Air Line Kit system. To ensure the longevity of Air Motors and Spindles, proper lubrication and air pressure are very important.**
- **The Air Line Kits offered by NAKANISHI are micron filter, regulator / lubricators specially designed to control the oil drip volume (3 drops per minute) for maximum efficiency.**

THE ROLE OF AIR LINE KIT

The Air Line Kit is designed to trap small amounts of moisture, debris and rust from the incoming air from the compressor. This provides a stable and accurate air supply through the regulator. The lubricator then meters the correct amount of lubricating oil to the air motor and spindle to ensure efficiency and longevity.

FOR HAND TOOLS

Product Code 4506 AIR LINE KIT AL-H1206 (Automatic Lubricating Device)

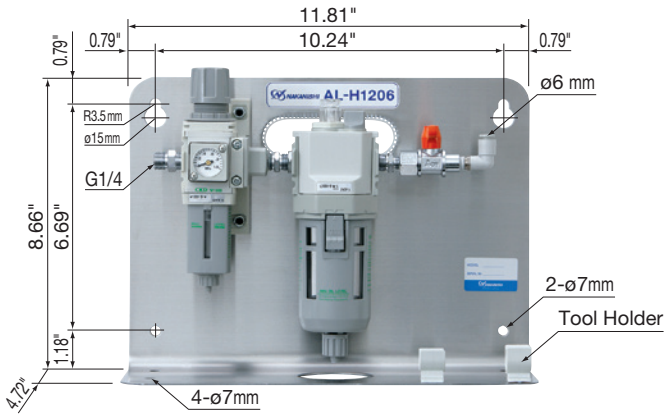

- Supplies smooth air flow and automatic lubrication, ensuring stable speed and power.
- Adjustable lubrication and air pressure settings provide longevity to the Air Grinder.
- Best for grinding and polishing applications. This compact Air Line Kit allows for portability or stationary mounting as well as a carrier for the Impulse.

Air Line Kit (For ø6 mm Hose · Filter Mesh 5 µm)

Product Code	Product Name	Standard Equipment · Accessories	
4506	AL-H1206	• Air Filter • Air Regulator • Air Pressure Gauge • Lubricator • Air ON-OFF Valve • Hose for Piping (K-275) : 6 ft • Lubricating Oil (K-211) : 1 pc.	

Fit to

IMPULSE	NSP-601 · NA45-230 · NA45-400 · NA90-230

Product Code 4507 AIR LINE KIT AL-H1207F (For Rotus System)

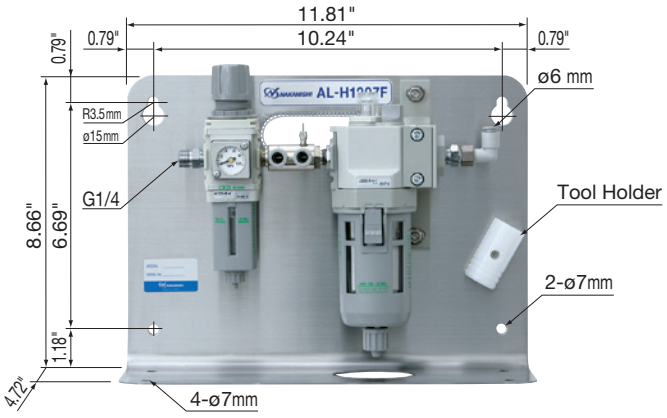

*This Air Line Kit is designed for use with the AFC-45 Foot Control, Product Code AF10045.

- Supplies smooth, conditioned air flow and automatic lubrication to ensure stable speed and power.
- The Filter, Lubricator and Regulator can be used to adjust motor speed.
- Adjustable lubrication and air pressure setting provides longevity to the Air Grinder.
- Its compact size allows for portability or stationary mounting.
- Unit includes a Tool Holder to store the Rotus Motor.

Air Line Kit (For ø6 mm Hose · Filter Mesh 5 µm)

Product Code	Product Name	Standard Equipment · Accessories	
4507	AL-H1207F	• Air Filter • Air Regulator • Air Pressure Gauge • Lubricator • Air Control Valve (CV-05) • Hose for Piping (K-275) : 6 ft • Lubricating Oil (K-211) : 1 pc.	

Fit to

ROTUS	IM-300 · IM-301

Product Code AF10045 FOOT CONTROL AFC-45

*Use Air Line Kit AL-H1207F, Product Code 4507 with this Foot Control.



Product Code	Product Name	Standard Accessories	
AF10045	AFC-45	Foot Control only	

FOR MACHINE SPINDLES

Product Code 4504 AIR LINE KIT AL-C1204 (For Electric Motors)

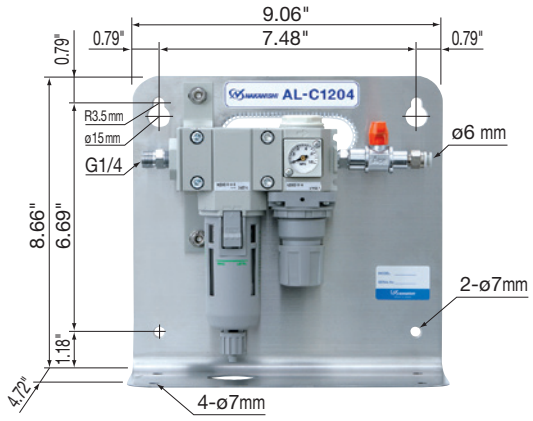

●The AL-C1204 Air Line Kit is designed to deliver clean, dry air to Electric Motors via the Controller. The filter removes small amounts of debris while the adjustable regulator provides the correct air pressure for cooling and purging.

Air Line Kit (For ø6 mm Hose · Filter Mesh 0.3 µm)

Product Code	Product Name	Standard Equipment · Accessories	
4504	AL-C1204	• Air Filter • Air Regulator • Air Pressure Gauge • Air ON-OFF Valve • Hose for Piping (K-275) : 6 ft	

Fit to

Controller	NE273 · NE246 · NE236 · NE211 · NE314

Product Code 4502 AIR LINE KIT AL-M1202 (For Air Motors)

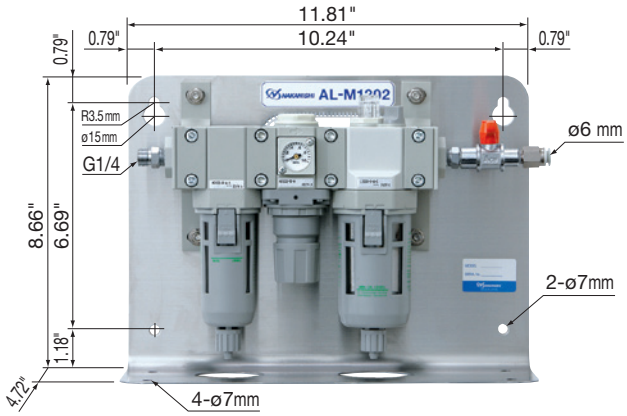

●The AL-M1202 provides simple, automatic conditioning of the air supplied to NAKANISHI Air Motors. The filter removes water and impure substances from the input air supply. The regulator maintains the proper air pressure, and the lubricator ensures proper oil flow to the motor and spindle. This Air Line Kit is wall mountable.

Air Line Kit (For ø6 mm Hose · Filter Mesh 0.3 µm)

Product Code	Product Name	Standard Equipment · Accessories	
4502	AL-M1202	• Air Filter • Air Regulator • Air Pressure Gauge • Lubricator • Air ON-OFF Valve • Hose for Piping (K-275) : 6 ft • Lubricating Oil (K-211) : 1 pc.	

Fit to

MA SERIES	Every Air Motor
MS SERIES	Every Air Motor Spindle
HTS · HPS · PLANET SERIES	Every Air Motor Spindle

Product Code 4503 AIR LINE KIT AL-M1203BS2 (For Air Motors)

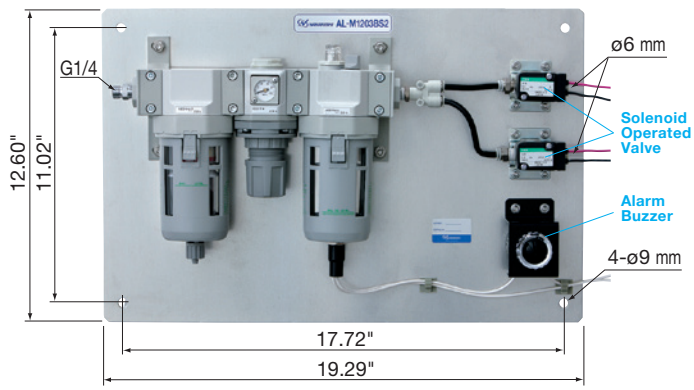

●The AL-M1203BS2 is equipped with 2 (DC+24V) Air Solenoids, a large capacity filter, large capacity oil reservoir, high flow regulator and a low oil level warning alarm, making this unit ideal for use on CNC machines. This Air Line Kit allows for the operation of 2 Air Motors.

Air Line Kit (For ø6 mm Hose · Filter Mesh 0.3 µm)

Product Code	Product Name	Standard Equipment · Accessories	
4503	AL-M1203 BS2	• Air Filter • Air Regulator • Air Pressure Gauge • Lubricator • Solenoid Valve (DC 24V) : 2 pcs. • Buzzer (DC 24V) • Hose for Piping (K-275) : 6 ft • Lubricating Oil (K-202) : 1 pc.	

Fit to

MA SERIES	Every Air Motor
MS SERIES	Every Air Motor Spindle
HPS SERIES	Every Air Motor Spindle

*Order by product code.

FOR MACHINE SPINDLES

Product Code 4505 AIR LINE KIT AL-A1205 (For Air Bearing Spindles)

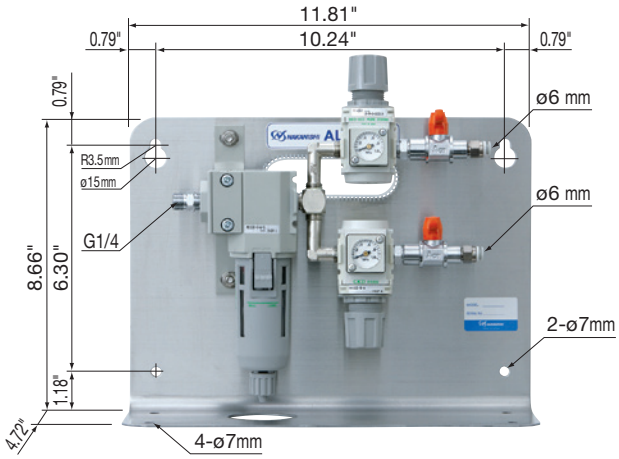

- The AL-A1205 is a dual output dry air, Air Line Kit designed for use on Electric Motor Systems that use the NRAF-5080 Air Bearing Spindle and the NE211 (E3000) Controller. One output is for the Electric Motor cooling, and the second output is for the Air Bearing operation. This unit is also designed for use on Air Turbine / Air Bearing Motor/Spindles such as the Xpeeds series and the ABT Series. One air output drives the Air Turbine Motor. The other air output drives the Air Bearing Spindle.
- Always supply air to the Air Bearing before starting the EM-3080 Motor. When stopping the spindle, always stop the motor before removing the air from the Air Bearing Spindle.
- Always supply air to the Air Bearing Spindle before starting the Air Turbine Motor. When stopping the spindle, always stop the Air Turbine Motor before removing the air from the Air Bearing Spindle.

Air Line Kit (For ø6 mm Hose · **Filter Mesh 0.3 µm**)

Product Code	Product Name	Standard Equipment · Accessories	
4505	AL-A1205	• Air Filter • Air Regulator • Air Pressure Gauge • Air ON-OFF Valve • Hose for Piping (K-275) : 6 ft	

Fit to

Controller	NE211
Spindle	NRAF-5080 · Xpeed1600 · ABT-1000

Product Code 1548 AIR LINE KIT AL-A0611 (For Air Bearing Spindles)

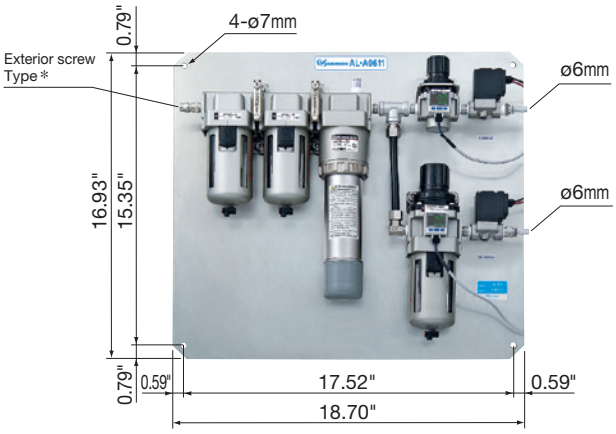

- The AL-A0611 is a high filtered Air Line Kit utilizing a *0.01µm micro mist filter system for NRAF-5080 Air Bearing Spindles combined with the NE211 (E3000) Controller.
- This Air Line Kit is highly recommended for use on all Xpeed Series and the ABT series (Air Turbine / Air Bearing motor/spindles).

*Exterior screw Type (Model KK13P-02M by SMC Corporation)

Air Line Kit (For ø6 mm Hose · **Filter Mesh 0.01 µm**)

Product Code	Product Name	Standard Equipment · Accessories	
1548	AL-A0611	• Mist Separator • Micro Mist Separator • Membrane Air Dryer • Regulator • Solenoid Valve • Digital Pressure Switch	

Fit to

Controller	NE211
Spindle	NRAF-5080 · Xpeed1600 · Xpeed1200 ABT-1000

Product Code U235406 REDUCER (ø6 - ø4 Adaptor)



Reducer

Product Code	Product Name	Specifications	
U235406	Reducer	• ø6 - ø4 mm Adaptor	

LUBRICATING OIL

Lubricating Oil (4 oz.)

Product Code	Product Name	Product	
AA10478	K-211		

Lubricating Oil (32 oz.)

Product Code	Product Name	Product	
AA10480	K-202		

The following products need Lubricating oil to use the AIR LINE KIT.

- ROTUS
- IMPULSE
- PLANET Series
- MS Series
- MA Series
- HTS Series
- HPS Series

1
EmaxEVO
ESPERT
ROTUS
IMPULSE
PRESTO II
Sheenus ZERO
2
iSpeed3
E2000
ø1.0"/ø0.98"/ø0.897"
E3000
– One Piece
E3000
– Modular
ø1.18"
ø1.0"/ø0.98"
ø0.897"
E3000
– 80,000rpm
E4000
3
MA
ø0.897"
ø1.0"
ø0.98"
ø1.18"
MS
ø0.75"
ø0.79"
ø0.87"
ø0.91"
ø1.0"
ø0.98"
4
HES
iSpeed5
HTS
HPS
PLANET
Xpeed
ABT
5
AIR LINE KIT
6
PARTS
7
TECHNICAL DATA
8
APPLICATION EXAMPLES
INDEX

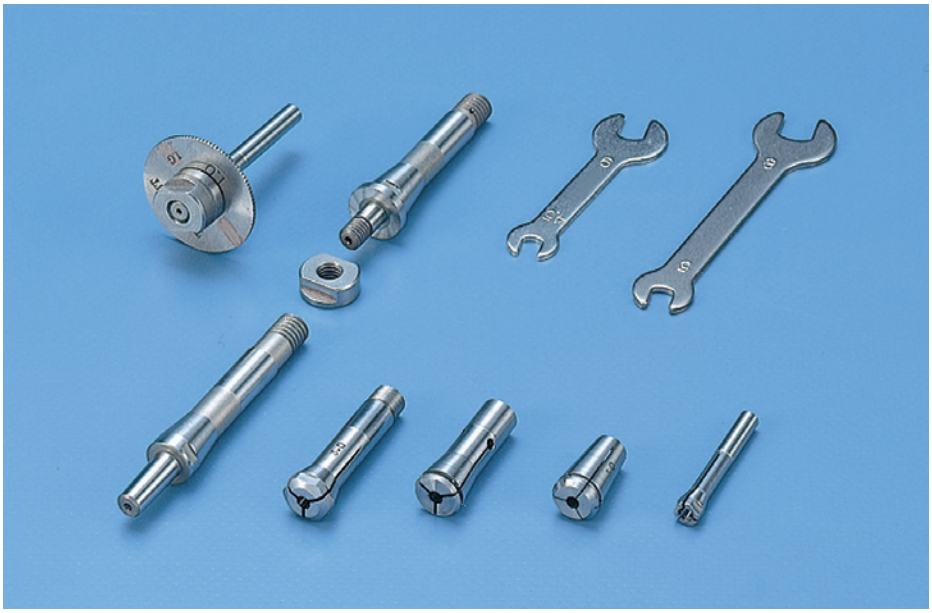

Index

Collet ..... 6-p2~6-p6
Collet Nut ..... 6-p6~6-p7
Motor Cord ..... 6-p8~6-p9
Foot Pedal & Handpiece Stand etc. 6-p9
Parts for Air Turbine & FINE BELT SANDER etc. 6-p10
Oil, Grease, Grease Nipple & Silencer 6-p11
Hose ..... 6-p12~6-p13
Metal Fitting, Filter Joint & Grindstone Flange etc. 6-p13
Special Arbor ..... 6-p14~6-p15
Wrench ..... 6-p16~6-p17
Grip Ring, Split Bushing ..... 6-p18~6-p19

CHA Group

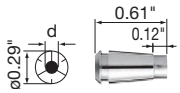

Product Name :
CHA-1.0,
CHA-3.0, CHA-3.0AA,
CHA-3.175, CHA-3.175AA,
CHA-4.0, CHA-4.0AA

Fit to : K-263
: CHN-A

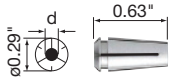

Product Name :
Besides the above

Fit to

AMS-1200 · AMS-1210 · AMS-1500 · AMS-1501 · AMS-250 · ABS-800 · iSpeed3
MS-19 · 20 · 22 · MSS-19 · 20 · 22 · NR-3080S · NRA-5080 · NR-320
PS20-70/120 · PS20S-70 · PSA23-80/130 · PSA23S-80 · PMS-3020A · BANTAM 250
PLANET 850 · PLANET 1500 · PLANET 2000 · SMS · HTS · EM20-S6000 · EM25-S6000
EMS-3060A · NR3060-AQC · NRR3060-QC · HES810 · HPS500 · Xpeed1600 · ABT-1000

Product Code	Product Name	Inside Diameter d	
91405	CHA-0.5	ø0.5	
91406	CHA-0.6	ø0.6	
91407	CHA-0.7	ø0.7	
RA11805	CHA-0.8	ø0.8	
RA11804	CHA-0.9	ø0.9	
RA11806	CHA-1.0	ø1.0	
RA11807	CHA-1.1	ø1.1	
RA11808	CHA-1.2	ø1.2	
RA11803	CHA-1.3	ø1.3	
RA11815	CHA-1.4	ø1.4	
RA11814	CHA-1.5	ø1.5	
RA11809	CHA-1.6	ø1.6	
91417	CHA-1.7	ø1.7	
RA11810	CHA-1.8	ø1.8	
RA11822	CHA-1.9	ø1.9	
RA11811	CHA-2.0	ø2.0	
RA11831	CHA-2.1	ø2.1	
91422	CHA-2.2	ø2.2	
91423	CHA-2.3	ø2.3	
RA11812	CHA-2.35	ø2.35	
RA11824	CHA-2.4	ø2.4	
RA11821	CHA-2.5	ø2.5	
RA11826	CHA-2.6	ø2.6	
91427	CHA-2.7	ø2.7	
RA11828	CHA-2.8	ø2.8	
RA11829	CHA-2.9	ø2.9	
RA11813	CHA-3.0	ø3.0	
91494	CHA-3.0AA*	ø3.0	
RA11830	CHA-3.1	ø3.1	
RA11818	CHA-3.175	ø1/8"	
91496	CHA-3.175AA*	ø1/8"	
91432	CHA-3.2	ø3.2	
91433	CHA-3.3	ø3.3	
91434	CHA-3.4	ø3.4	
RA11823	CHA-3.5	ø3.5	
91436	CHA-3.6	ø3.6	
91437	CHA-3.7	ø3.7	
91438	CHA-3.8	ø3.8	
91439	CHA-3.9	ø3.9	
RA11819	CHA-4.0	ø4.0	
91495	CHA-4.0AA*	ø4.0	

CHB Group

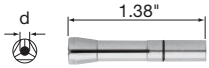

Fit to

NRR-2651 · NRR-3060 · NR40-5100 ATC

Product Code	Product Name	Inside Diameter d	
92820	CHB-2.0	ø2.0	
92830	CHB-3.0	ø3.0	
92893	CHB-3.175	ø1/8"	
92840	CHB-4.0	ø4.0	

CHC Group



Fit to

IC-300 · KC-300 · EIC-300 · EKC-300 · IC-E · KC-E

Product Code	Product Name	Inside Diameter d	
90416	CHC-1.6	ø1.6	
90492	CHC-2.35	ø2.35	
90430	CHC-3.0	ø3.0	
90493	CHC-3.175	ø1/8"	

CHF Group

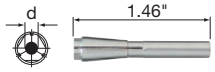

Fit to

NR-3080

Product Code	Product Name	Inside Diameter d	
91730	CHF-3.0	ø3.0	
91793	CHF-3.175	ø1/8"	

CHG Group

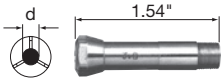

Fit to

HG-200 · NR-301 · EHG-400

Fit to

NR-301

Product Code	Product Name	Inside Diameter d	
RA11777	CHG-1.0	ø1.0	
RA11778	CHG-1.5	ø1.5	
RA11766	CHG-1.6	ø1.6	
RA11780	CHG-2.0	ø2.0	
RA11771	CHG-2.35	ø2.35	
RA11781	CHG-2.5	ø2.5	
RA11772	CHG-3.0	ø3.0	
RA11452	CHG-3.175	ø1/8"	
RA11697	CHG-4.0	ø4.0	
RA11698	CHG-4.76	ø4.76	
RA11709	CHG-5.0	ø5.0	
RA11773	CHG-6.0	ø6.0	
RA11714	CHG-6.35	ø1/4"	

CHH Group

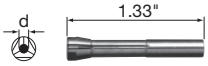

Fit to

IH-300 · IR-310 · EHL-401 · EHR-401 · EHR-500 · VH-E

Product Code	Product Name	Inside Diameter d	
RE11729	CHH-1.0	ø1.0	
90615	CHH-1.5	ø1.5	
RE11659	CHH-1.6	ø1.6	
RE11734	CHH-2.0	ø2.0	
RE11625	CHH-2.35	ø2.35	
90625	CHH-2.5	ø2.5	
RE11739	CHH-3.0	ø3.0	
RE11630	CHH-3.175	ø1/8"	

CHK Group

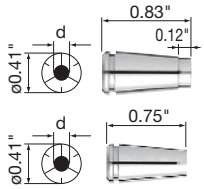

Product Name :
CHK-1.0,
CHK-3.0, CHK-3.0AA,
CHK-3.175, CHK-3.175AA,
CHK-4.0, CHK-4.0AA,
CHK-6.0, CHK-6.0AA,
CHK-6.35, CHK-6.35AA

Fit to : K-265
: CHN-B

Product Name :
Besides the above

Fit to

NR-302 · ENR-302

Fit to

ABS-70P · ABS-400 · AMX-50 · AMX-65 (1/1 Ratio) · AMX-80 (1/1 Ratio)
EM30-S6000 · EMA-3020K · EMS-3041 · EMS-3045 · EMS-3052 · EMS-3056
EMS-3046-J4 · EMS-3057-J4 · EMS-6040 · EMS-6040K · EMS-3060K
EMSF-3060K · EMR-3008K · MS-23 · 25 · MSH-25 · MSS-25 · MSSH-25 · MST-23
MSST-23 · NR-2351 · NR-2532 · NR-H2532 · NR-2551 · NR-H2551 · NR-303
NR-303P · NR-311 · NR-3060S · NR-403E · NR-453E · NRAF-5080 · NRL-300
NRL-300E · NR3060-AQC · NRR3060-QC · NR4040-AQC · NRR4040-QC
PMA-3013K · PMR-3005K · PMS-3020K · PS23-80/130 · PS23S-80 · PSA25-90/140
PSA25S-90 · PSA30-100/160 · PSA30S-100 · PSA35-120/180 · PSA35S-120
RAS-101 · RAS-151E · RAX-271E · RAX-71E · RAS-2511 · RAS-H2511 · FG-01S
HES510 · HPS250 · PLANET 400 · PLANET 600 · Xpeed1200

*High precision type

Product Code	Product Name	Inside Diameter d	
PL42665	CHK-0.5	ø0.5	
91506	CHK-0.6	ø0.6	
PL42667	CHK-0.7	ø0.7	
PL42668	CHK-0.8	ø0.8	
PL42692	CHK-0.9	ø0.9	
PL42691	CHK-1.0	ø1.0	
PL42699	CHK-1.1	ø1.1	
PL42682	CHK-1.2	ø1.2	
PL42693	CHK-1.3	ø1.3	
PL42700	CHK-1.4	ø1.4	
PL42695	CHK-1.5	ø1.5	
PL42696	CHK-1.6	ø1.6	
PL42709	CHK-1.7	ø1.7	
PL42698	CHK-1.8	ø1.8	
91519	CHK-1.9	ø1.9	
PL42672	CHK-2.0	ø2.0	
PL42681	CHK-2.1	ø2.1	
PL42662	CHK-2.2	ø2.2	
91523	CHK-2.3	ø2.3	
PL42690	CHK-2.35	ø2.35	
PL42710	CHK-2.4	ø2.4	
PL42663	CHK-2.5	ø2.5	
PL42712	CHK-2.6	ø2.6	
PL42617	CHK-2.7	ø2.7	
PL42694	CHK-2.8	ø2.8	
PL42689	CHK-2.9	ø2.9	
PL42669	CHK-3.0	ø3.0	
91597	CHK-3.0AA*	ø3.0	
PL42670	CHK-3.1	ø3.1	
PL42685	CHK-3.175	ø1/8"	
91598	CHK-3.175AA*	ø1/8"	
91532	CHK-3.2	ø3.2	
PL42705	CHK-3.3	ø3.3	
PL42701	CHK-3.4	ø3.4	
PL42707	CHK-3.5	ø3.5	
PL42706	CHK-3.6	ø3.6	
91537	CHK-3.7	ø3.7	
PL42702	CHK-3.8	ø3.8	
91539	CHK-3.9	ø3.9	
PL42678	CHK-4.0	ø4.0	
91599	CHK-4.0AA*	ø4.0	
PL42711	CHK-4.1	ø4.1	
91542	CHK-4.2	ø4.2	
PL42671	CHK-4.3	ø4.3	
PL42673	CHK-4.4	ø4.4	
PL42687	CHK-4.5	ø4.5	
91546	CHK-4.6	ø4.6	
PL42674	CHK-4.7	ø4.7	
PL42680	CHK-4.76	ø4.76	
91548	CHK-4.8	ø4.8	
91549	CHK-4.9	ø4.9	
PL42676	CHK-5.0	ø5.0	
PL42677	CHK-5.1	ø5.1	
PL42708	CHK-5.2	ø5.2	
91553	CHK-5.3	ø5.3	
PL42703	CHK-5.4	ø5.4	
PL42704	CHK-5.5	ø5.5	
PL42679	CHK-5.6	ø5.6	
91557	CHK-5.7	ø5.7	
91558	CHK-5.8	ø5.8	
PL42697	CHK-5.9	ø5.9	
PL42686	CHK-6.0	ø6.0	
91600	CHK-6.0AA*	ø6.0	
PL42675	CHK-6.35	ø1/4"	
91601	CHK-6.35AA*	ø1/4"	

indicates Hand Grinder use
indicates Machine Spindle use

*Order by product code.

CHM Group

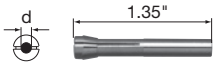

Fit to
MH-300 · BMH-300

Fit to
NR-600 · NR-601 · AMH-300 · AMH-301

Product Code	Product Name	Inside Diameter d	
RE11605	CHM-1.0	ø1.0	
RE11600	CHM-1.6	ø1.6	
RE11609	CHM-2.0	ø2.0	
RE11602	CHM-2.35	ø2.35	
RE10459	CHM-3.0	ø3.0	
RE11604	CHM-3.175	ø1/8"	

CHP Group

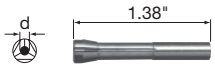

Fit to
ENR-420 ATC

Fit to
NRR-2650 · NR-260E ATC

Product Code	Product Name	Inside Diameter d	
AS72115	CHP-2.0	ø2.0	
AS72116	CHP-3.0	ø3.0	
AS72117	CHP-3.175	ø1/8"	

CHR Group

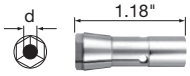

Fit to
NR-5040E ATC · NR-5041E ATC · NR50-5100 ATC

Product Code	Product Name	Inside Diameter d	
91920	CHR-2.0	ø2.0	
91930	CHR-3.0	ø3.0	
91993	CHR-3.175	ø1/8"	
91940	CHR-4.0	ø4.0	
91960	CHR-6.0	ø6.0	
91996	CHR-6.35	ø1/4"	

CHR RS Group

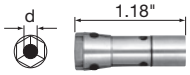

Fit to
NR-5040E ATC · NR-5041E ATC · NR50-5100 ATC-RS

Product Code	Product Name	Inside Diameter d	
93201	CHR-3.0 RS	ø3.0	
93202	CHR-3.175 RS	ø1/8"	
93203	CHR-4.0 RS	ø4.0	
93204	CHR-6.0 RS	ø6.0	
93205	CHR-6.35 RS	ø1/4"	

CHS Group

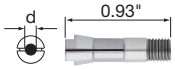

Fit to
ERA-270 · IMPULSE SERIES

Fit to
RA-200 · RA-271E · RA-2521 · RA-H2521

Product Code	Product Name	Inside Diameter d	
NK10216	CHS-0.8	ø0.8	
90509	CHS-0.9	ø0.9	
NK10218	CHS-1.0	ø1.0	
90511	CHS-1.1	ø1.1	
90512	CHS-1.2	ø1.2	
90513	CHS-1.3	ø1.3	
90514	CHS-1.4	ø1.4	
NK10219	CHS-1.5	ø1.5	
NK10220	CHS-1.6	ø1.6	
90517	CHS-1.7	ø1.7	
90518	CHS-1.8	ø1.8	
90519	CHS-1.9	ø1.9	
NK10221	CHS-2.0	ø2.0	
90521	CHS-2.1	ø2.1	
90522	CHS-2.2	ø2.2	
90523	CHS-2.3	ø2.3	
NK10215	CHS-2.35	ø2.35	
NK10224	CHS-2.4	ø2.4	
NK10222	CHS-2.5	ø2.5	
90526	CHS-2.6	ø2.6	
90527	CHS-2.7	ø2.7	
90528	CHS-2.8	ø2.8	
NK10209	CHS-2.9	ø2.9	
NK10223	CHS-3.0	ø3.0	
NK10210	CHS-3.175	ø1/8"	

CHSS Group

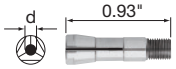

Fit to
EMA-3020S · PMA-3013S

Product Code	Product Name	Inside Diameter d	
93010	CHSS-1.0	ø1.0	
93015	CHSS-1.5	ø1.5	
93020	CHSS-2.0	ø2.0	
93092	CHSS-2.35	ø2.35	
93025	CHSS-2.5	ø2.5	
93030	CHSS-3.0	ø3.0	
93093	CHSS-3.175	ø1/8"	

CH16OH Group

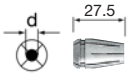

Fit to
BMS-4040-MQL · BMS-4040-MQL-2M

Product Code	Product Name	Inside Diameter d	
93330	CH16OH-3.0	ø3.0	
93331	CH16OH-3.175	ø3.175	
93340	CH16OH-4.0	ø4.0	
93350	CH16OH-5.0	ø5.0	
93360	CH16OH-6.0	ø6.0	
93363	CH16OH-6.35	ø6.35	
93370	CH16OH-7.0	ø7.0	
93380	CH16OH-8.0	ø8.0	
93390	CH16OH-9.0	ø9.0	
93400	CH16OH-10.0	ø10.0	

CH5 Group

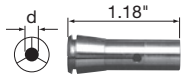

Fit to : K-218
: CHN-02

Fit to

PLANET 550 · BANTAM 150 · AMS-150R · AMS-150L · AMS-600
AMS-20R · AMS-20L · AMS-50R · AMS-50L · MSTN-23 · NR-310 · FG-02S

Product Code	Product Name	Inside Diameter d	
91203	CH5-0.3	ø0.3	
91204	CH5-0.4	ø0.4	
91205	CH5-0.5	ø0.5	
PL11464	CH5-0.6	ø0.6	
PL11465	CH5-0.7	ø0.7	
PL11467	CH5-0.8	ø0.8	
PL11468	CH5-0.9	ø0.9	
PL11488	CH5-1.0	ø1.0	
PL11469	CH5-1.1	ø1.1	
PL11470	CH5-1.2	ø1.2	
91213	CH5-1.3	ø1.3	
91214	CH5-1.4	ø1.4	
PL11494	CH5-1.5	ø1.5	
PL11495	CH5-1.6	ø1.6	
91217	CH5-1.7	ø1.7	
PL11498	CH5-1.8	ø1.8	
91219	CH5-1.9	ø1.9	
PL11489	CH5-2.0	ø2.0	
91221	CH5-2.1	ø2.1	
PL11492	CH5-2.2	ø2.2	
91223	CH5-2.3	ø2.3	
91292	CH5-2.35	ø2.35	
91224	CH5-2.4	ø2.4	
PL10672	CH5-2.5	ø2.5	
91226	CH5-2.6	ø2.6	
PL10683	CH5-2.7	ø2.7	
PL10670	CH5-2.8	ø2.8	
91229	CH5-2.9	ø2.9	
PL11490	CH5-3.0	ø3.0	
91231	CH5-3.1	ø3.1	
PL11466	CH5-3.175	ø1/8"	
91232	CH5-3.2	ø3.2	
91233	CH5-3.3	ø3.3	
PL10671	CH5-3.4	ø3.4	
PL10673	CH5-3.5	ø3.5	
PL10674	CH5-3.6	ø3.6	
PL10682	CH5-3.7	ø3.7	
91238	CH5-3.8	ø3.8	
91239	CH5-3.9	ø3.9	
PL10677	CH5-4.0	ø4.0	
91241	CH5-4.1	ø4.1	
91242	CH5-4.2	ø4.2	
PL10681	CH5-4.3	ø4.3	
PL10679	CH5-4.4	ø4.4	
PL10678	CH5-4.5	ø4.5	
91246	CH5-4.6	ø4.6	
91247	CH5-4.7	ø4.7	
91294	CH5-4.76	ø4.76	
91248	CH5-4.8	ø4.8	
91249	CH5-4.9	ø4.9	
PL10676	CH5-5.0	ø5.0	
91251	CH5-5.1	ø5.1	
91252	CH5-5.2	ø5.2	
91253	CH5-5.3	ø5.3	
91254	CH5-5.4	ø5.4	
91255	CH5-5.5	ø5.5	
91256	CH5-5.6	ø5.6	
91257	CH5-5.7	ø5.7	
91258	CH5-5.8	ø5.8	
91259	CH5-5.9	ø5.9	
PL11502	CH5-6.0	ø6.0	
PL10675	CH5-6.35	ø1/4"	

CH6 Group



Fit to

ABS-1600

Product Code	Product Name	Inside Diameter d	
90830	CH6-3.0	ø3.0	
90893	CH6-3.175	ø1/8"	

CH8 Group

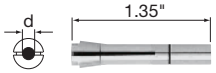

Fit to

RA-100 · RA-151E · RA-2511
RA-H2511

Product Code	Product Name	Inside Diameter d	
PL11539	CH8-0.8	ø0.8	
91009	CH8-0.9	ø0.9	
PL11540	CH8-1.0	ø1.0	
PL11531	CH8-1.1	ø1.1	
PL11536	CH8-1.2	ø1.2	
PL11533	CH8-1.3	ø1.3	
PL11555	CH8-1.4	ø1.4	
PL11556	CH8-1.5	ø1.5	
PL11517	CH8-1.6	ø1.6	
PL11568	CH8-1.7	ø1.7	
PL11569	CH8-1.8	ø1.8	
91019	CH8-1.9	ø1.9	
PL11574	CH8-2.0	ø2.0	
91021	CH8-2.1	ø2.1	
PL11532	CH8-2.2	ø2.2	
91023	CH8-2.3	ø2.3	
PL11521	CH8-2.35	ø2.35	
PL11522	CH8-2.4	ø2.4	
PL11523	CH8-2.5	ø2.5	
PL11525	CH8-2.6	ø2.6	
91027	CH8-2.7	ø2.7	
PL11578	CH8-2.8	ø2.8	
91029	CH8-2.9	ø2.9	
PL11588	CH8-3.0	ø3.0	
PL10637	CH8-3.175	ø1/8"	

CH16 Group

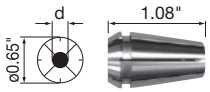

CH16-10.0 Length 0.96"

Fit to

BMS-4020 · BMS-4020 2M · BMS-4020RA
BMS-4040 · BMS-4040 2M · BMS-4040RA
NR-4040 · NR4040-AQC · NRR4040-QC

Product Code	Product Name	Inside Diameter d	
93130	CH16-3.0	ø3.0	
93193	CH16-3.175	ø1/8"	
93140	CH16-4.0	ø4.0	
93160	CH16-6.0	ø6.0	
93196	CH16-6.35	ø1/4"	
93180	CH16-8.0	ø8.0	
93100	CH16-10.0	ø10.0	

CH20-16

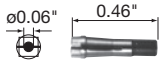

Fit to

PLANET 2000

Product Code	Product Name	Inside Diameter d	
PL10641	CH20-16	ø1/16"	

indicates Hand Grinder use
indicates Machine Spindle use

*Order by product code.

ER16-UP / AR16-AA

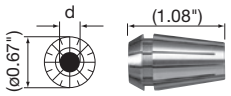

Fit to : CHN-E

Fit to
AMX-80 (1/3 · 1/9 Ratio) · PSA60-200/260 · PSA60S-200

Product Code	Product Name	Fit to	
—	ER16-UP	REGO-FIX ER16-UP	Available in the market
—	AR16-AA	ALPS TOOL AR16-AA	

K-252

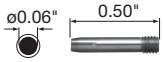

Fit to
MFC-300S

Product Code	Product Name	Inside Diameter d	
RE10360	K-252	ø1/16"	

K-253

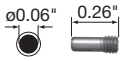

Fit to
MFC-300M

Product Code	Product Name	Inside Diameter d	
RE10356	K-253	ø1/16"	

NKM6 Group (NK Micron Collet)

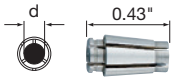

Fit to : CHN-6

Fit to
IG-400

Product Code	Product Name	Inside Diameter d	
92030	NKM6-2.35	ø2.35	
92092	NKM6-3.0	ø3.0	
92093	NKM6-3.175	ø1/8"	

Collet Nut CHN-A

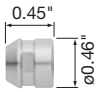

Fit to : CHA

Fit to
iSpeed3 · EM20-S6000 · EM25-S6000 · EMS-3060A · HES810 · HPS500
MSS-19 · MSS-20 · MSS-22 · NR-3080S · NR3060-AQC · NRR3060-QC
PMS-3020A · SMS401

Product Code	Product Name	Fit to	
2102	CHN-A	CHA	

Collet Nut CHN-AA

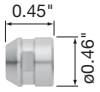

Fit to : CHA

Fit to
HTS · AMS-1501/1510 · AMS-1210

Product Code	Product Name	Fit to	
2159	CHN-AA	CHA	

Collet Nut CHN-B (For EMS-6040/6040K)

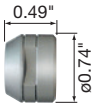

Fit to : CHK

Fit to
EMS-6040 · EMS-6040K

Product Code	Product Name	Fit to	
AS12123	CHN-B	CHK	

Collet Nut CHN-E

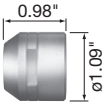

Fit to : ER16-UP
AR16-AA

Fit to
AMX-80 (1/3 · 1/9 Ratio) · PSA60-200/260 · PSA60S-200

Product Code	Product Name	Fit to	
PS12119	CHN-E	ER16-UP AR16-AA	

Collet Nut CHN-02



Fit to : CH5

Fit to

NR-310 · AMS-20R · AMS-20L · AMS-50R · AMS-50L · MSTN-23 · FG-02S

Product Code	Product Name	Fit to	
AS32124	CHN-02	CH5	

Collet Nut CHN-3A



Fit to : CHA

Fit to

Xpeed1600 · ABT-1000

Product Code	Product Name	Fit to	
2160	CHN-3A	CHA	

Collet Nut CHN-16



Fit to : CH16

Fit to

BMS-4020 · BMS-4020 2M · BMS-4020RA · BMS-4040 · BMS-4040 2M
BMS-4040RA · NR-4040 · NR4040-AQC · NRR4040-QC

Product Code	Product Name	Fit to	
2161	CHN-16	CH16	

Collet Nut K-263

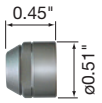

Fit to : CHA

Fit to

NRA-5080 · NR-320 · ABS-800 · PS20-70/120 · PS20S-70 · PSA23-80/130
PSA23S-80 · SMS400 · BANTAM 250 · PLANET 850 · PLANET 1500
AMS-250 · AMS-1500 · MS-19 · 20 · 22

Product Code	Product Name	Fit to	
RA11820	K-263	CHA	

Collet Nut K-265

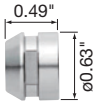

Fit to : CHK

Fit to

ABS-400 · ABS-70P · AMX-50 · AMX-65 (1/1 Ratio) · AMX-80 (1/1 Ratio)
EM30-S6000 · EMA-3020K · EMS-3041 · EMS-3046-J4 · EMS-3052 · EMS-3057-J4
EMS-3060K · EMSF-3060K · EMR-3008K · FG-01S · HES510 · HPS250
NR-403E · NR-453E · NRL-300E · NR-2532 · NR-H2532 · NR-2511 · NR-H2511
NR-2551 · NR-H2551 · NR-2351 · NRL-300 · NR-303 · NR-303P · NR-311 · NR-3060S
NR3060-AQC · NRR3060-QC · NR4040-AQC · NRR4040-QC · MS-23 · MSS-23
MST-23 · MSST-23 · MS-25 · MSH-25 · MSS-25 · MSSH-25 · PMA-3013K
PMR-3005K · PMS-3020K · PS23-80/130 · PS23S-80 · PSA25-90/140 · PSA25S-90
PSA30-100/160 · PSA30S-100 · PSA35-120/180 · PSA35S-120 · PLANET 400
PLANET 600 · RAS-101 · RAS-151E · RAS-2510 · RAS-H2510 · RAX-271E · RAX-71E

Product Code	Product Name	Fit to	
RA11900	K-265	CHK	

Collet Nut K-265A

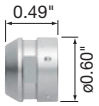

Fit to : CHK

Fit to

NRAF-5080 · Xpeed1200

Product Code	Product Name	Fit to	
2158	K-265A	CHK	

indicates Hand Grinder use
indicates Machine Spindle use

*Order by product code.

Emax EVOlution Motor Cord

Product	Description	Product Code	Product Name	Fit to	
	Straight Cord : 4.5 ft <with Switch>	8088	ENKCD-410S	ENK-410S (Standard Motor)	
		8089	ENKCD-250T	ENK-250T (Torque Motor)	
	Coiled Cord : 4.5 ft <with Switch>	8090	ENKCD-410C	ENK-410S (Standard Motor)	
		8091	ENKCD-250C	ENK-250T (Torque Motor)	

ELECTER Motor Cord

Product	Description	Product Code	Product Name	Fit to	Switch color	
	Coiled Cord : 4.5 ft <with Switch>	EMX8004	NCL-351C	NK-351 (Standard Motor)	Blue	
		EMX8013	NCL-261C	NK-261 (Torque Motor)	Green	
		EMX8023	NCL-151C	NK-151 (Super Torque Motor)	Gray	
	Straight Cord : 6 ft <with Switch>	EMX8005	NCL-351S	NK-351 (Standard Motor)	Blue	
		EMX8014	NCL-261S	NK-261 (Torque Motor)	Green	
		EMX8024	NCL-151S	NK-151 (Super Torque Motor)	Gray	
	Extension Straight Cord : 10 ft	EMX8051	NCL-EXT	ELECTER E-max Motor (All Types)		

ESPERT 500 Motor Cord

Product	Description	Product Code	Product Name	Fit to	
	ESPERT 500 Compact Motor Cord : 4.5 ft	ES9093	ENKCD-50C	ENK-500C (Compact Motor Cord)	
	ESPERT 500 Compact Motor Cord : 9.84 ft	9095	ENKCD-50C 3M		
	ESPERT 500 Torque Motor Cord : 4.5 ft	ES9094	ENKCD-50T	ENK-500T (Torque Motor Cord)	
	ESPERT 500 Torque Motor Cord : 9.84 ft	9096	ENKCD-50T 3M		

ESPERT 400 Motor Cord

Product	Description	Product Code	Product Name	Fit to	
	ESPERT 400 Motor Cord	9046	ENKCD-401	ENK-401 • Standard Motor Cord : 4.5 ft	
	ESPERT 400 Motor Cord 10 ft	9047	ENKCD-401-3M	ENK-401 • Long Motor Cord : 10 ft	

Foot Pedal

Product	Description	Product Code	Product Name	Fit to	
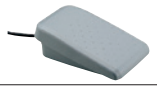	Foot Pedal ON-OFF and speed change can be accomplished.	8106	FC-64	Controller Emax EVOlution NE249	
	Foot Pedal ON-OFF and speed change can be accomplished.	EG11404	FC-40	Controller ELECTER E-max NE129 · ELECTER-GX NE22E ESPERT 400 NE51 · ESPERT 500 NE96 SONIC-CUTTER NE80	
		EL11330	FC-35	ELECTER · CONCEPT NE30	
	Foot Pedal ON-OFF switch only	SHE8103	FC-24	SHEENUS NE124 · SHEENUS neo NE240	
	Foot Control	AF10045	AFC-45	MIRACLE · ROTUS FINE BELT SANDER ROTUS Air Line Kit AL-0306 · AL-H1207F	
		Z100001	AFC-40	PRESTO II PR2-06 · PRESTO PR-06	

Handpiece Stand, Handpiece Holder & Head Cover

Product	Description	Product Code	Product Name	Fit to	
	Handpiece Stand	8104	K-274	Emax EVOlution · ELECTER E-max SHEENUS · SHEENUS neo ESPERT 500	
		1519	Z095101	ESPERT 400	
	Handpiece Holder	8107	K-273	Controller Emax EVOlution NE249	
		EMX8050	HH-01	Controller ELECTER E-max NE129	
	Head Cover	NK11043	CNA	IMPULSE	

indicates Hand Grinder use
indicates Machine Spindle use

*Order by product code.

Power Supply Cord

Product	Description	Product Code	Product Name	Fit to	
	Power Supply Cord	1484	K-269	Controller Emax EVOlution NE249	

PRESTO II / PRESTO

Product	Description	Product Code	Product Name	Fit to	
	PRESTO II Cartridge	T815016I	PR-03	PRESTO II · PRESTO	

FINE BELT SANDER

Product	Description	Product Code	Product Name	Fit to	
	Tension Pulley	KBS1067	TP-12	KBS-100 · EBS-100	
		1103	TP-12A	KBS-101 · EBS-101	
	Tension Pulley Assembly	1104	TPA-12A	KBS-101 · EBS-101	

Carbon Brush

Product	Description	Product Code	Product Name	Fit to	
	Carbon Brush (each 2 pcs.)	EO23011	E023011	NK-351 NK-350 · NK-804T ET II NK-260	
		EO37011	E037011	NK-151 · NK-261 NK-150 ET II NK-260N	

Oil List

Product	Description	Product Code	Product Name	Fit to	
	Lubricating Oil (4 oz.)	AA10478	K-211	For Air Motor · Air Line Kit	
	Lubricating Oil (32 oz.)	AA10480	K-202	For Air Motor · Air Line Kit	

Grease & Grease Nipple

Product	Description	Product Code	Product Name	Fit to	
	Grease for Reducer (2.5mL)	1547	—	ARG-011E · ARG-021E · EMR-3008K EMA-3020K · RAX-271E · RAX-71E	
	Grease for Reducer (10mL)	1550	—		
	Grease for Reducer (100mL)	1549	—		
	Grease Nipple	K137A251	—		

Silencer

Product	Description	Product Code	Product Name	Fit to	
	Silencer Large (with Metal Fitting)	AA10040	K-209	ROTUS AMS-20 · 50 · 150 · 250 · 600 · AM-300 (R · L) AM-2526 (RA · LA) · AM-H2526 (RA · LA) · MS-19 · 20 · 22 (R · L) MSS-19 · 20 · 22 (R) · MS-23 (R · L) · MST-23 (R · L) MSTN-23 (R · L) · MS-25 (R · L) · MSH-25 (R · L) · MSS-25 (R) MSSH-25 (R) · MSST-23 (R) · PLANET 550	
	Silencer Small (with Metal Fitting)	AA10055	K-208	IMPULSE · MIRACLE AM-300 (RA · LA) · AM-600 · AM-310 · AM-2526 (R · L) AM-H2526 (R · L) · MS-19 · 20 · 22 (RA · LA) · MSS-19 · 20 · 22 (RA) MS-23 (RA · LA) · MST-23 (RA · LA) · MSST-23 (RA) MSTN-23 (RA · LA) · MS-25 (RA · LA) · MSH-25 (RA · LA) · MSS-25 (RA) MSSH-25 (RA) · ABS-800 · AM-3020	
	Silencer (with Metal Fitting)	AS1546	K-246	AMX-8003 · AMX-8001	
	Silencer	K1049101	—	PLANET 600	

indicates Hand Grinder use
indicates Machine Spindle use

*Order by product code.

Hose List

Product	Description	Product Code	Product Name	Fit to	
	Hose 6 ft (INTAKE)	AA10426	K-206	ROTUS IM-301	
	Hose 6 ft (INTAKE, Chip Air Mechanism)	2020	K-207	ROTUS IM-300	
	Hose 4.5 ft	K076211	K-213	IMPULSE & PNEU-SONIC	
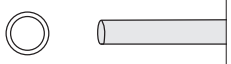	Hose for Piping 6 ft (ø6.0 mm)	Z101240	K-237	PRESTO II · PRESTO	
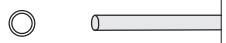	Turbine Hose 6 ft (ø5.1 mm)	T815220	K-238	PRESTO II · PRESTO	
	Hose for Piping 6 ft with Metal Fitting	AA10411	K-275	For Air Line Kit	
	Hose ø6 mm (O.D.) (INTAKE) 13 ft · Blue	2056	K-247	EMS-6040 · EMS-6040K · HTS SERIES	
	Hose ø6 mm (O.D.) (INTAKE) 6 ft · Blue	2059	K-254	ABS-400 · 800 · 1600 AMS-1210 · AMS-1501 · PLANET 600	
	Hose ø7 mm (O.D.) (INTAKE) 6 ft	PL12022	K-257	PLANET 550 · AMS-20 · 50 · 150 · 250 · 600 · 1500 · BANTAM 150 · 250	
	Hose ø8 mm (O.D.) (EXHAUST) 3 ft	PL12023	K-258	PLANET 550 · AMS-20 · 50 · 150 · 250 · 600	
	Hose ø6 mm (O.D.) (INTAKE) 6 ft	PL12024	K-259	PLANET 850 · 1500 · 2000 · AMS-1200	
	Hose ø6 mm (O.D.) (INTAKE) 6 ft	091140 6020	K-215	AM-300 (RA · LA) · AM-310 (RA · LA) · AM-2526 (RA · LA) AM-H2526 (RA · LA) · AM-600RA · MS-19 · 20 · 22 (RA · LA) MSS-19 · 20 · 22 (RA) · MS-23 (RA · LA) · MST-23 (RA · LA) MSST-23 (RA) · MSTN-23 (RA · LA) · MS-25 (RA · LA) · MSH-25 (RA · LA) MSS-25 (RA) · MSSH-25 (RA) · ABS-400 · ABS-800 · ABS-1600 ABS-70P · PLANET 400 · AM-3020 · AMX-50 · AMX-65 · AMX-8008 SMS400 · 401 · PMA-3020A · PMA-3013K · PMA-3013S · PMS-3020K PMS-3020A · PMR-3005K	
	Hose ø8 mm (O.D.) (EXHAUST) 3 ft	091150 8010	K-216	AM-300 (RA · LA) · AM-310 (RA · LA) · MS-19 · 20 · 22 (RA · LA) MSS-19 · 20 · 22 (RA) · MS-23 (RA · LA) · MST-23 (RA · LA) MSTN-23 (RA · LA) · MSST-23 (RA) · MS-25 (RA · LA) · MSH-25 (RA · LA) MSS-25 (RA) · MSSH-25 (RA) · ABS-800 · AM-600RA	
	Hose ø8 mm (O.D.) (INTAKE) 6 ft	2043	K-223	AMX-8003 · AMX-8001	
	Hose ø8 mm (O.D.) (EXHAUST) 3 ft	2052	K-256	AM-2526 (RA · LA) · AM-H2526 (RA · LA) · AM-3020 AMX-50 · AMX-65 · AMX-8008 · PMA-3013K · PMA-3013S PMR-3005K · PMS-3020A · PMS-3020K	
	Hose ø10 mm (O.D.) (EXHAUST) 3 ft	2050	K-224	AMX-8003 · AMX-8001	
	Hose 6 ft	AA12030	K-204	AM-310 (R · L) · AM-600R · AM-2526 (R · L) · AM-H2526 (R · L) MST-23 (R · L) · MSTN-23 (R · L) · MSS-25 (R) · MSSH-25 (R) MSST-23 (R) · AM-H2525 (R · L) · AM-2525 (R · L) · MS-25 (R · L) MSH-25 (R · L)	
	Hose 6 ft	2049	K-221	AM-300 (R · L) · MSS-19 · 20 · 22 (R) MS-19 · 20 · 22 (R · L)	
	Air Hose with filter ø6 mm (O.D.) 6 ft	2058	K-251	NE123 · NE145 · NE145-OP1 · NE314 · NE147 · NE147-800 NE147-400 · NE211 · NE211-OP1 · NE236 · NE246 · NE260 NE273 · NR40-5100 ATC · NR3060-AQC · NR4040-AQC NR50-5100 ATC · NR50-5100 ATC-RS · NR-5041E ATC	

■ Hose List

Product	Description	Product Code	Product Name	Fit to	
	EMCD-3000 Air Hose	E304052	—	EMCD-3000 · EMCD-3000A	

■ Metal Fitting & Filter Joint

Product	Description	Product Code	Product Name	Fit to	
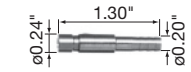	Metal Fitting (for ø6 mm Quick Disconnecting Joint)	AS12035	K-241	(For K-215 Hose) (For K-259 Hose)	
	Metal Fitting (for ø6 mm Quick Disconnecting Joint)	AS12036	K-242	(For K-204 Hose)	
	Metal Fitting (for ø6 mm Quick Disconnecting Joint)	AS12037	K-244	(For K-257 Hose)	
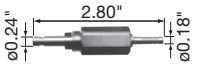	Filter Joint (for ø6 mm Quick Disconnecting Joint)	AA82038	FJ-01	(For K-206 Hose) (For K-207 Hose) (For K-211 Hose) (For K-215 Hose) (For K-247 Hose) (For K-254 Hose) (For K-259 Hose)	
	Filter Joint (for ø6 mm Quick Disconnecting Joint)	AA82039	FJ-02	(For K-213 Hose) (For K-204 Hose)	
	Filter Joint (for ø6 mm Quick Disconnecting Joint)	AA82040	FJ-03	(For K-257 Hose)	

■ Grindstone Flange

*NGF2-19, EGF-19 for right hand (cw) rotation only.

Product	Description	Product Code	Product Name	Fit to	Specifications	
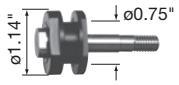	Grindstone Flange	AS42127	NGF2-19	NR-311	Applicable Grindstone Dimensions ø19.05 (I.D.) x ø40 (O.D.) x 7 (W) mm	
		AS2138	EGF-19	NR-403E · NR-453E · NR-3060S · EMS-3041 · EMS-3045 EMS-3052 · EMS-3056 · EMS-3060K · EMSF-3060K EM30-S6000 · PMS-3020K · PS23 · PSA25 · PSA30 · PSA35		

■ indicates Hand Grinder use
■ indicates Machine Spindle use

■ Special Drill Chuck Arbor

*For right hand (cw) rotation only.

Product	Description	Product Code	Product Name	Fit to	
	Special Drill Chuck Arbor For Drill Chuck Jacob's Taper No. 0 Run-out Accuracy : Within 0.05 mm	AS02136	DCH-J0A	MS-19 · 20 · 22 · MSS-19 · 20 · 22 PS20-70/120 · PS20S-70 · PSA23-80/130 PSA23S-80 · NR-320 · SMS400	
	Special Drill Chuck Arbor For Drill Chuck Jacob's Taper No. 0 Run-out Accuracy : Within 0.05 mm	AS42132	DCH-J0K	ENR-302 RAS-101 · RAS-151E · RAX-271E · RAX-71E · RAS-2511 · RAS-H2511 NR-3060S · NR-311 · NR-303 · NR-2351 · NR-303P · NR-403E · NR-453E NR-2551 · NR-H2551 · NR-2532 · NR-H2532 · MS-23 · MST-23 · MSST-23 MSTN-23 · MS-25 · MSH-25 · MSS-25 · MSSH-25 · EMA-3020K EMS-3041 · EMS-3052 · EMS-3045 · EMS-3056 · EMS-3060K EMR-3008K · EMSF-3060K · EMS-6040 · EMS-6040K · ABS-70P HES · PS23 · PSA25 · PSA30 · PSA35 · NRL-300 · NRL-300E PMA-3013K · PMR-3050K · PMS-3020K	
	Special Drill Chuck Arbor For Drill Chuck Jacob's Taper No. 0 Run-out Accuracy : Within 0.05 mm	AS42134	DCH-J0N	NR-310	

■ Special Metal Saw Arbor

*For right hand (cw) rotation only.

Product	Description	Product Code	Product Name	Fit to	
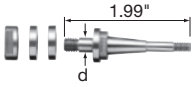	Special Metal Saw Arbor Dimensions of Metal Saw ød (I.D) x ø1.18" (O.D.) Run-out Accuracy : Within 0.02 mm	AS02135	KCH-01A (6.35)	MS-19 · 20 · 22 · MSS-19 · 20 · 22 PS20-70/120 · PS20S-70 · PSA23-80/130 PSA23S-80 · NR-320	
		2135	KCH-01A (6.0)		
		2155	KCH-01A (8.0)		
		2152	KCH-01A (5.0)		
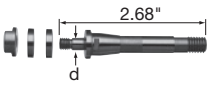	Special Metal Saw Arbor Dimensions of Metal Saw ød (I.D) x ø1.18" (O.D.) Run-out Accuracy : Within 0.02 mm	AS42133	KCH-01N (5.0)	MSTN-23 · NR-310	
		2133	KCH-01N (6.0)		
		2154	KCH-01N (8.0)		
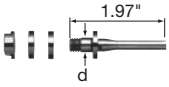	Special Metal Saw Arbor Dimensions of Metal Saw ød (I.D) x ø1.18" (O.D.) Run-out Accuracy : Within 0.02 mm	AS11434	KCH-02 (5.0)	RA-100 · RA-151E · RA-2511 · RA-H2511	
		1077	KCH-02 (6.0)		
		2147	KCH-02 (8.0)		
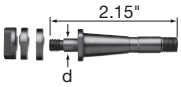	Special Metal Saw Arbor Dimensions of Metal Saw ød (I.D) x ø1.18" (O.D.) Run-out Accuracy : Within 0.02 mm	K301085	KCH-03 (5.0)	ENR-302 RAS-101 · RAS-151E · RAX-271E · RAX-71E · RAS-2511 · RAS-H2511 NR-3060S · NR-311 · NR-303 · NR-2351 · NR-303P · NR-403E · NR-453E NR-2551 · NR-H2551 · NR-2532 · NR-H2532 · MS-23 · MST-23 · MSST-23 MSTN-23 · MS-25 · MSH-25 · MSS-25 · MSSH-25 · EMA-3020K EMS-3041 · EMS-3052 · EMS-3045 · EMS-3056 · EMS-3060K EMR-3008K · EM30-S6000 · EMSF-3060K · EMS-6040 · EMS-6040K ABS-70P · PS23 · PSA25 · PSA30 · PSA35 · NRL-300 · NRL-300E PMA-3013K · PMR-3050K · PMS-3020K	
		AS42130A	KCH-03 (6.0)		
		AS42130	KCH-03 (6.35)		
		2149	KCH-03 (8.0)		

■ Grindstone Arbor

*For right hand (cw) rotation only.

Product	Description	Product Code	Product Name	Fit to	
	**Grindstone Arbor** (for Cup Wheel & Rubber Pad)	NK11045	NCH-01	IMPULSE	
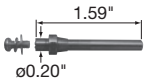	**Grindstone Arbor** Run-out Accuracy : Within 0.02 mm For Grindstone with ø5.0 mm I.D.	AS11029	AGM-01	AMH-300 · AMH-301 NR-600 · NR-601 · SMS401	
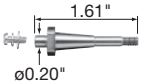	**Grindstone Arbor** Run-out Accuracy : Within 0.02 mm For Grindstone with ø5.0 mm I.D.	AS02137	AGM-01A	MS-19 · 20 · 22 · MSS-19 · 20 · 22 PS20-70/120 · PS20S-70 · PSA23-80/130 PSA23S-80 · NR-320 · SMS400 · HPS500	
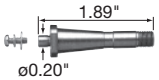	**Grindstone Arbor** Run-out Accuracy : Within 0.02 mm For Grindstone with ø5.0 mm I.D.	AS42131	AGM-03	ENR-302 RAS-101 · RAS-151E · RAX-271E · RAX-71E · RAS-2511 · RAS-H2511 NR-3060S · NR-311 · NR-303 · NR-2351 · NR-303P · NR-403E · NR-453E NR-2551 · NR-H2551 · NR-2532 · NR-H2532 · MS-23 · MST-23 · MSST-23 MSTN-23 · MS-25 · MSH-25 · MSS-25 · MSSH-25 · EMA-3020K EMS-3041 · EMS-3052 · EMS-3045 · EMS-3056 · EMS-3060K EMR-3008K · EM30-S6000 · EMSF-3060K · EMS-6040 · EMS-6040K ABS-70P · HES · PS23 · PSA25 · PSA30 · PSA35 · NRL-300 NRL-300E · PMA-3013K · PMR-3050K · PMS-3020K · HPS250	
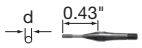	PY-[][]D (Diamond) BY-[][]B (CBN) PY-[][]L (Blank)	—	— ø0.4 mm~ø2.3 mm	PLANET 2000	
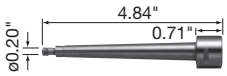	**Grinding Arbor for Deep Hole**	AS43737	AX-105	NR-310	

■ indicates Hand Grinder use
■ indicates Machine Spindle use

*Order by product code.

Wrench List

Product	Description	Product Code	Product Name	Fit to	
	Wrench K-220	PL10622	K-220	PLANET 2000	
	Wrench 6 x 4.5 mm (0.24" x 0.18")	RE22001	–	BMH-300 · MH-300 NR-600 · NR-601 · AMH-300 · AMH-301	
	Wrench 6.1 x 8 mm (0.24" x 0.31")	2069	Z103117	NRR-2651 · NR40-5100 ATC NRR-3060 · EMA-3020S	
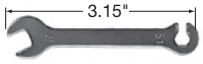	Wrench 7 x 5.1 mm (0.28" x 0.20")	RE10207	–	IH-300 · IR-310 · ERA-270 · BMH-300 · MH-300 EHR-401 · EHL-401 · EHR-500 · VH-E NRR-2650 · NR-600 · NR-601 · AMH-300 · AMH-301 RA-200 · RA-271E · RA-2521 · RA-H2520 · NR-3080 ABS-1600 · EMA-3020S · PMA-3013S	
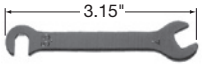	Wrench 7 x 5.5 mm (0.28" x 0.22")	RE10290	–	HA-500 RA-100 · RA-151E · RA-2511 RA-H2510	
	Wrench 8 x 5 mm (0.31" x 0.20")	RA12012	–	ERA-270 · K-042 · IMPULSE AMS-250 · AMS-1210 · AMS-1501 · iSpeed3 · EM20-S6000 EM25-S6000 · EMS-3060A · NR-3080S · NR3060-AQC NRR3060-QC · HES810 · HPS500 · HTS · MS-19 · 20 · 22 MSS-19 · 20 · 22 · NR-320 · NRA-5080 · NRR-2650 · PLANET 850 PLANET 1500 · PMS-3020A · PMA-3013S · RA-100 · RA-151E RA-200 · RA-271E · RA-2511 · RA-2521 · SMS400 · SMS401	
	Wrench 9 x 9 mm (0.35" x 0.35")	2064	–	IG-400	
	Wrench 10 x 10 mm (0.39" x 0.39")	RA10406	–	HG-200 · EHG-400 PLANET 550 · PLANET 850 · PLANET 1500 · BANTAM 150 BANTAM 250 · NR-301 · MS-19 · 20 · 22 · AMS-150 · 250 · 600 ABS-800 · HES-50/40 RA · NR-320 · PS20 · NRA-5080 · SMS400 NR-5041E ATC · NRR-2651 · HPS500 · ABT-1000	
	Wrench 9 x 11 mm (0.35" x 0.43") (Length 3.54")	2054	–	AMS-1210 · 1501 · EM20-S6000 · EM25-S6000 · EMS-3060A HTS · HES810 · iSpeed3 · MSS-19 · 20 · 22 · NR-5041E ATC NR40-5100 ATC · NR50-5100 ATC· NR50-5100 ATC-RS NR-3080S · NR3060-AQC · NRR3060-QC · PMS-3020A · SMS401	
	Wrench 12 x 14 mm (0.47" x 0.55") (Length 3.94")	AS42026	–	NR-302 · ENR-302 ABS-400 · ABS-800 · ABS-70P · AMS-20 · AMS-50 · AMX-50 AMX-6510 · AMX-8008 · EM30-S6000 · EMS-6040 · EMS-6040K EMS-3060K · EMSF-3060K · EMS · EMR-3008K · EMA-3020K HES510 · HPS250 · NR-2351 · NR-401E · NR-311 · NR-303 NR-3060S · NR-303P · NRAF-5080 · NR-2532 · NR-H2532 NR-2551 · NR-H2551 · NR-403E · NR-453E · NR50-5100 ATC NR50-5100 ATC-RS · NR3060-AQC · NRR3060-QC · NR4040-AQC NRR4040-QC · MS-23 · MST-23 · MSST-23 · MSTN-23 · MS-25 MSS-25 · MSH-25 · MSSH-25 · NRL-300E · NRL-300 · PLANET 400 PLANET 600 · PMS-3020K · PS23 · PSA23 · PSA25 · PSA30 PSA35 · RAS-101 · RAS-151E · RAX-271E · RAX-71E · RAS-2511 RAS-H2511 · RA-H2530 · PMR-3005K · PMA-3013K · Xpeed1200	
	Wrench 15 x 17 mm (0.59" x 0.67") (Length 4.53")	2048	–	IG-400 AMX-6501 · AMX-6503 · PSA40	
	Wrench 16 x 18 mm (0.63" x 0.71") (Length 4.92")	2047	–	SLS-16 EMS-6040 · EMS-6040K · PSA35	
	Wrench 17 x 22 mm (0.67" x 0.87") (Length 5.51")	2083	–	BMS-4020 · BMS-4020 2M · BMS-4020RA · BMS-4040 · BMS-4040 2M BMS-4040RA · NR-4040 · NR4040-AQC · NRR4040-QC	
	Wrench 20 x 24 mm (0.79" x 0.94") (Length 5.91")	RA12018	–	NR-302 · SLS-16 · EIC-300 · EKC-300 · ERA-270 ECN-011 AM-300 · AM-310 · AM-600 · EM-2350J · NR-2351 NR-301 · NR-303 · NR-600 · NR-601 · RAS-101 · RA-100 RA-200 · NR-311 · AMH-300 · AMH-301 · MSTN-23 PSA45 · PSA60 · NRL-300 · NRL-300E · AMX-8001 · AMX-8003	
	Wrench 22 x 27 mm (0.87" x 1.06") (Length 6.69")	RA12045	–	AM-2526 · AM-H2526 · AM-3020 · AMX-6501 · AMX-6503 EM25-5000-J4 · EM-3060 · EM-3060J · EM25N-5000-J4 EM-805 · EM-3080J · EM-3030J · EM-3030T-J NR-2532 · NR-H2532 · NR-2551/H2551 · NR-3080S NR-3060S · NR-403E · NR-453E · NRAF-5080 · NRR-2651 NRR-3060 · NR3060-AQC · NRR3060-QC · PSA40 · PSA45 PSA50 · PSA60 · PST50 · PST60 · RA-151E · RA-271E RAS-151E · RAX-271E · RAX-71E	

Wrench List

Product	Description	Product Code	Product Name	Fit to	
	Chuck Wrench	RE10389	K-232	MFC-300S · MFC-300M	
	Chuck Wrench	RE10394	K-231	IC-300 · KC-300 · EIC-300 · EKC-300 IC-E · KC-E	
	Wrench 4 x 7 mm (0.16" x 0.28") (for K-231)	2068	—	IC-300 · KC-300 · EIC-300 · EKC-300 IC-E · KC-E	
	Bar Wrench (2.83")	RE22015	K-212	HG-200 · HA-500 · EHG-400 · IMPULSE ABS-1600	
	Bar Wrench (3.94")	RE82046	K-236	NR-260E ATC · NR-5041E ATC · NRA-5080 · NRAF-5080 NR50-5100 ATC · NR50-5100 ATC-RS · NR40-5100 ATC	
	Bar Wrench	2073	K-277	Xpeed1600 · ABT-1000	
	Bar Wrench	2067	PCR-30	IG-400	
	Pin Wrench	RE22014	K-233	NK-351 · ENK-410S · IH-300 · IR-310 · HG-200 · SR-300 BMH-300 · MH-300 · MFC-300S · MFC-300M · IC-300 IC-E · KC-300 · KC-E · K-042 · RG-01 · RG-02 · CN-01 EHR-500 · EHL-401 · ERG-01B · ERG-01 · IM-301 · IM-300	
	Pin Wrench	HR10303	T-751	PRESTO II / PRESTO · HI-RITE NR-3080	
	Allen Wrench (1.5 mm)	—	—	ML-2 · ML-4 · ML-8 · EML-8 · SLS-16 IMPULSE · SONIC-CUTTER	Available in the market
	Allen Wrench (2 mm)	—	—	NLS-110 · LS-100 · NLS-100 · ELS-100 Xpeed1600 · ABT-1000	
	Allen Wrench (2.5 mm)	—	—	SHEENUS · SHEENUSneo ABS-1600	
	Allen Wrench (3 mm)	—	—	KBS-101 · NLS-110 · LS-100 · NLS-100 · ELS-100 · EBS-101	
	Allen Wrench (6 mm)	—	—	PST50 · PST60	
	Wrench with Handle (8 mm)	LS22016	K-248	Length : 4.09"	
	Wrench with Handle (10 mm)	LS22017	K-249	Length : 4.13"	
	Wrench (10 mm)	—	—	SHEENUS · SHEENUS neo	Available in the market
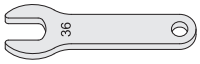	Wrench (36 mm)	2080	—	EM-4040 · EM-4040A · EM-4020 EM-4020A · NR-4040 · NR4040-AQC NRR4040-QC	
	L Shaped Wrench (9 mm)	2055	—	EHR-500 · IR-310 E400Z · E500Z · E800Z	
	Torque Wrench Head (10 mm)	2082	—	Xpeed1600	Contact NSK
	Torque Wrench Head (14 mm)		—	Xpeed1200	Contact NSK
	Torque Wrench	60000518	60000518	Xpeed1600 · Xpeed1200	Contact NSK

indicates Hand Grinder use
indicates Machine Spindle use

*Order by product code.

GRIP RING

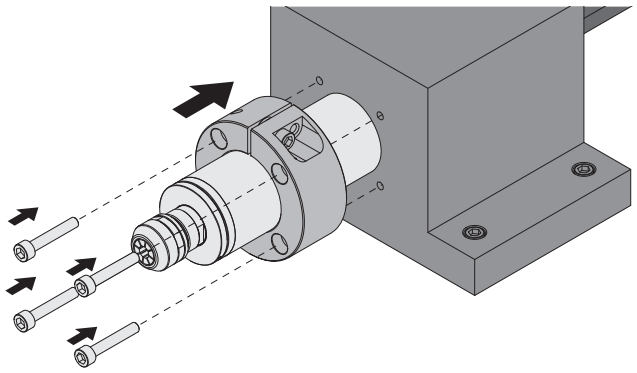

- The Grip Ring is an adjustable position split type flange for 40mm and 30mm spindles.
- The Grip Ring can easily mounted or removed from any CNC machine or specialty machine tool block or tool post.
- Eliminates the chance of over tightening and damaging the spindle in the sleeve during installation.

⚠ Caution

- **Do not remove the Lock Bolt. If the Lock Bolt is removed, the Washer inside may move. Once the Washer is moved, it may make it impossible to attach the Lock Bolt.**
- **Do not remove the spindle while the Grip Ring is attached to the machines' holder. This may cause deformation and / or damage to the Grip Ring.**

Product Code 1888 GRIP RING GR-22.8

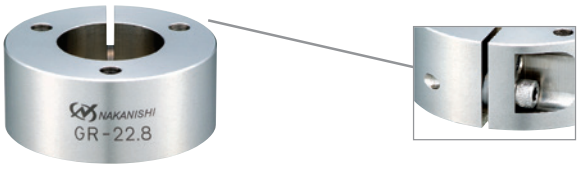

Product Code	Product Name	Standard Equipment · Accessories	
1888	GR-22.8	• Mounting Bolt (M5x25) : 3 pcs.	

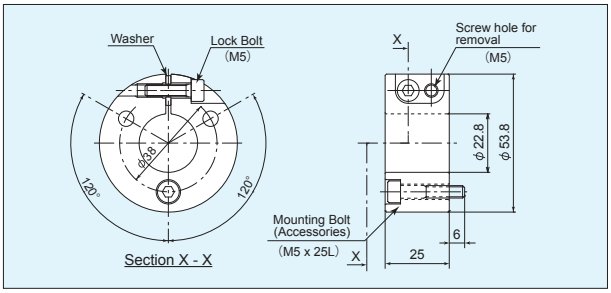

Product Code 1885 GRIP RING GR-30

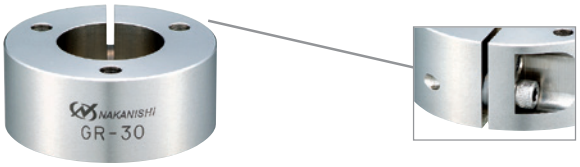

Product Code	Product Name	Standard Equipment · Accessories	
1885	GR-30	• Mounting Bolt (M5x25) : 3 pcs.	

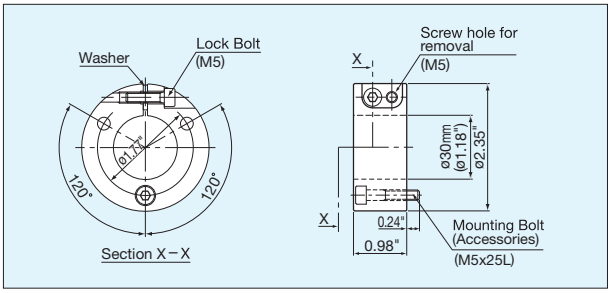

Product Code 1886 GRIP RING GR-40

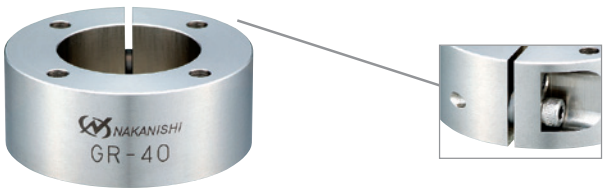

Product Code	Product Name	Standard Equipment · Accessories	
1886	GR-40	• Mounting Bolt (M5x30) : 4 pcs.	

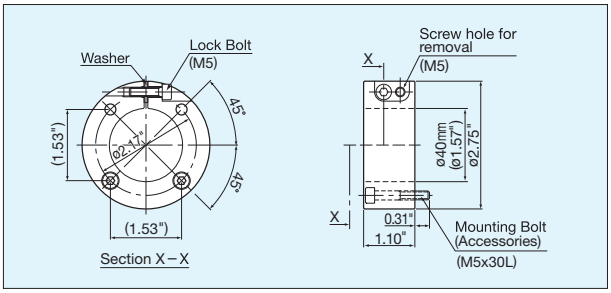

■ Split Bushing : Bushings to allow smaller dia. spindles to be mounted in larger dia. holders

Description	Product Code	Product Name	I.D.	O.D.	Length	Fit to	
	1871	RB-22.8x25	ø0.897" (ø22.8 mm)	ø0.98" (ø25 mm)	44 mm	RA-100	
	1872	RBS-22.8x25	ø0.897" (ø22.8 mm)	ø0.98" (ø25 mm)	25 mm	NR-303 · NR-2351 NR-311 · AMH-301 RA-200 · RAS-101	
	1873	RB-22.8x25.4	ø0.897" (ø22.8 mm)	ø1.0" (ø25.4 mm)	44 mm	RA-100	
	1874	RBS-22.8x25.4	ø0.897" (ø22.8 mm)	ø1.0" (ø25.4 mm)	25 mm	NR-303 · NR-2351 NR-311 · AMH-301 RA-200 · RAS-101	
	1875	RB-20x23	ø0.79" (ø20 mm)	ø0.91" (ø23 mm)	40 mm	EM20-S6000 MSS2030 · MSS2008 MSS2002	
	1876	RB-20x22.8	ø0.79" (ø20 mm)	ø0.897" (ø22.8 mm)	40 mm	EM20-S6000 MSS2030 · MSS2008 MSS2002	
	1877	RB-20x22	ø0.79" (ø20 mm)	ø0.87" (ø22 mm)	40 mm	EM20-S6000 MSS2030 · MSS2008 MSS2002	
	1878	RB-20x25	ø0.79" (ø20 mm)	ø0.98" (ø25 mm)	40 mm	EM20-S6000 MSS2030 · MSS2008 MSS2002	
	1879	RB-20x25.4	ø0.79" (ø20 mm)	ø1.0" (ø25.4 mm)	40 mm	EM20-S6000 MSS2030 · MSS2008 MSS2002	
	1880	RB-30x32	ø1.18" (ø30 mm)	ø1.26" (ø32 mm)	45 mm	NR-3060S NR-453E · NR-403E	
	1881	RB-30x36	ø1.18" (ø30 mm)	ø1.42" (ø36 mm)	45 mm	NR-3060S NR-453E · NR-403E	
	1883	RB-22x25x34L	ø0.87" (ø22 mm)	ø0.98" (ø25 mm)	33.5 mm	BMF-322 · BM-322FL · BM-322FR	
	1884	RB-22x25.4x34L	ø0.87" (ø22 mm)	ø1.0" (ø25.4 mm)	33.5 mm	BMF-322 · BM-322FL · BM-322FR	

Note : After inserting spindle into bushing, verify the O.D. measurement vs. the machine holder I.D.

■ indicates Hand Grinder use
■ indicates Machine Spindle use

*Order by product code.

1
EmaxEVO
ESPERT
ROTUS
IMPULSE
PRESTO II
Sheenus ZERO
2
iSpeed3
E2000
ø1.0"/ø0.98"/ø0.897"
E3000
– One Piece
E3000
– Modular
ø1.18"
ø1.0"/ø0.98"
ø0.897"
E3000
– 80,000rpm
E4000
3
MA
ø0.897"
ø1.0"
ø0.98"
ø1.18"
MS
ø0.75"
ø0.79"
ø0.87"
ø0.91"
ø1.0"
ø0.98"
4
HES
iSpeed5
HTS
HPS
PLANET
Xpeed
ABT
5
AIR LINE KIT
6
PARTS
7
TECHNICAL DATA
8
APPLICATION EXAMPLES
INDEX

TECHNICAL DATA

- External Input / Output Control Signal Specifications

E3000 ····· 7-p2~7-p9

E2000 ····· 7-p10~7-p17

E4000 ····· 7-p18~7-p23

iSpeed3 ····· 7-p24~7-p29

E3000 CONTROLLER - OPERATION MANUAL [OM-K0438]
External Input / Output Control Signal Specifications (7-p2~p9)

13. EXTERNAL INPUT / OUTPUT CONNECTOR

13-1 External Input / Output Connector A

(1) Details of External Input / Output Connector A Signal

⚠ WARNING

- **DO NOT connect any circuit other than SELV (DC+24V) (Safety Extra Low Voltage) to the External Input / Output Connector A of the CONTROLLER. This will cause I / O board damage in the CONTROLLER.**
- **Do not input voltage any higher than DC+24V or over current into the input / output circuit. Ensure when connecting the LOAD (resister) to the output circuit the proper voltage is present. This will cause damage to the CONTROLLER.**

⚠ CAUTION

Input / Output Connector A do not use Pins No. 9 and No. 22. If pin No. 9 and No. 22 are connected, the CONTROLLER will be damage.

Table. 3

Pin No.	Code	Function	Input / Output	Description	
1	COM_1	External Power source for External input	Input	DC0V or DC+24V	Power source to be used for External Inputs Signals.
2	DIR_IN	Rotating Direction Setting	Input	OFF (Open) : FWD. ON (Closed) : REV.	Controls the rotational direction of the motor spindle. Setting parameter P6, can start with reverse rotation. (Refer to P86 " 15 - 4 ⑥ P6 Selection of External Motor Start Signal Control Mode " section.)
3	CNT_IN	Count Pulse Signal for Setting Motor Speed	Input	OFF (Open) → ON (Closed)	One pulse will increase or decrease 1,000rpm in Spindle Speed depending on parameter P5 setting. (Refer to P85 " 15 - 4 ⑤ P5 Selection of External Speed Control Mode" section.)
4	RESET	Error Release	Input	ON (Closed) → OFF (Open)	Error Code can be released and the system restarted by toggling this signal OFF and ON. Error will not be released until cause of the error has been removed.
5	SEL1	Motor Select 1	Input	—	Use when selecting motor, after connecting CONTROLLER to the SELECTOR. 4 motors can be selected by SEL0 and SEL1 combination. (Refer to P65 "12-2-2 (7) Motor Selection Table. 2.")
		Speed Point Select 1			When only using CONTROLLER, Speed Point Signal can be selected. Speed Point (U1 - U4) can be selected by SEL0 and SEL1 signal combination. Refer to P 64 " 12 - 2 - 2 (5) ③ Set by the Speed Point Signal " section. Need to set parameter P5 . (Refer to P85 " 15 - 4 ⑤ P5 Selection of External Speed Control Mode " section.)
6	RUN	Rotating	Output	OFF (Open) : Stop ON (Closed) : Rotating	Output shows that the motor is rotating.
7	DIR_OUT	Rotating Direction	Output	OFF (Open) : FWD. ON (Closed) : REV.	Output shows the direction of the Motor is rotating.
8	ERR	Error	Output	OFF (Open) : Error ON (Closed) : Normal	Output shows that error has occurred. Error code will be displayed on Digital Speed Indicator ⑪. When setting parameter P1, Error Output Mode can be changed. (Refer to P84 " 15 - 4 ① P1 Setting of Error Output Mode " section.)
9	Not used	—	—	—	***Note : Never use pin labeled not used.**

Pin No.	Code	Function	Input / Output	Description	
10	GND	Internal GND for Motor Speed Control Voltage	Output	Internal CONTROLLER GND	This GND will be used for " Motor Speed Control Voltage (VR) ".
11	Vcc	Internal Power Source for Motor Speed Control Voltage	Output	Internal Power Source : DC+10V	Internal Power Source for " Motor Speed Control Voltage (VR) ".
12	MOTOR_I	Motor Current Monitor	Output	2Amp / V, DC0V - DC+10V	Output Motor Current Monitor with Analog Monitor Voltage. 2Amp / 1V. Max. 20Amp.
13	GND	Internal GND for Analog Monitor	Output	Internal CONTROLLER GND	This GND will be used for analog monitor (MOTOR_I, SPEED_V, and LOAD).
14	START	Rotate Command	Input	OFF (Open) : Stop ON (Closed) : Start	Motor Start and Motor Stop Signal Setting parameter P6, can start with forward rotation. (Refer to P86 " 15 - 4 ⑥ P6 Selection of External Motor Start Signal Control Mode" section.)
15	UD_IN	UP / DOWN Signal for Setting Motor Speed	Input	OFF (Open) : Speed Down ON (Closed) : Speed Up	Determines speed up or speed down. Need to set parameter P5. (Refer to P85 " 15 - 4 ⑤ P5 Selection of External Speed Control Mode " section.)
16	500min^{-1}	Rotates Motor at "Centering " speed	Input	ON (Closed) : 500rpm OFF (Open) : Normal Operation	Set motor rotation speed is 500rpm. Use the Centering Mode.
17	SEL0	Motor Select 0	Input	—	Use when selecting motor, after connecting CONTROLLER to the SELECTOR. 4 motors can be selected by SEL 0 and SEL 1 combination. (Refer to P65 " 12 - 2 - 2 (7) Motor Selection Table. 2.")
		Speed Point Select 0			When using CONTROLLER only, Speed Point Signal can be selected. Speed Point (U1 - U4) can be selected by SEL 0 and SEL 1 signal combination. Refer to P64 " 12 - 2 - 2 (5) ③ Set by the Speed Point Signal " section. Need to set parameter P5. (Refer to P85 " 15 - 4 ⑤ P5 Selection of External Speed Control Mode " section.)
18	COM_2	External Power Source for External Output	Input	DC0V or DC+24V	Power source to be used for External outputs Signals.
19	PULSE	Rotating Pulse	Output	1 pulse / rotation	1 revolution of the motor generates one pulse. Duty 50%.
20	WARNING	WARNING	Output	OFF (Open) : Normal Operation ON (Closed) : Warning	Output shows that warning has occurred. Warning code will be displayed on Digital Speed Indicator ⑪.
21	COIN	Speed Achievement	Output	OFF (Open) : Set speed not achieved ON (Closed) : Set speed achieved	Shows that the Motor has achieved more than 90% of the set speed.
22	Not used	—	—	—	***Note : Never use a pin labeled not used.**
23	VR	Motor Speed Control Voltage	Input	Speed (rpm) = Speed Control Voltage Signal × 10000 / 1.5 DC0V - DC+10V	Sets rotating speed of the motor. (For 60,000 rpm of motor) When using 80,000rpm of motor speed, setting parameter P8. (Refer to P87 " 15 - 4 ⑧ P8 Selection of Motor Speed Control Voltage / DC+10V Signal Method " section.) Refer to Fig.35, 36 about relationship between motor speed and control signal.
24	LOAD	Torque Load Monitor	Output	Torque Load Monitor (%) = Torque Load Monitor Voltage × 20	Shows that the torque being applied to the analog motor. 20%/ V 100% (rating) / DC+ 5V Torque Load Monitor : 0 - 200% (DC0V - DC+10V)
25	SPEED_V	Rotating Speed Analog Monitor Voltage	Output	10,000min^{-1} / V	Output the rotation speed of rotating motor with Analog Monitor Voltage. 10,000min^{-1} / V DC0V - DC+10V

(2) Input / Output Diagram

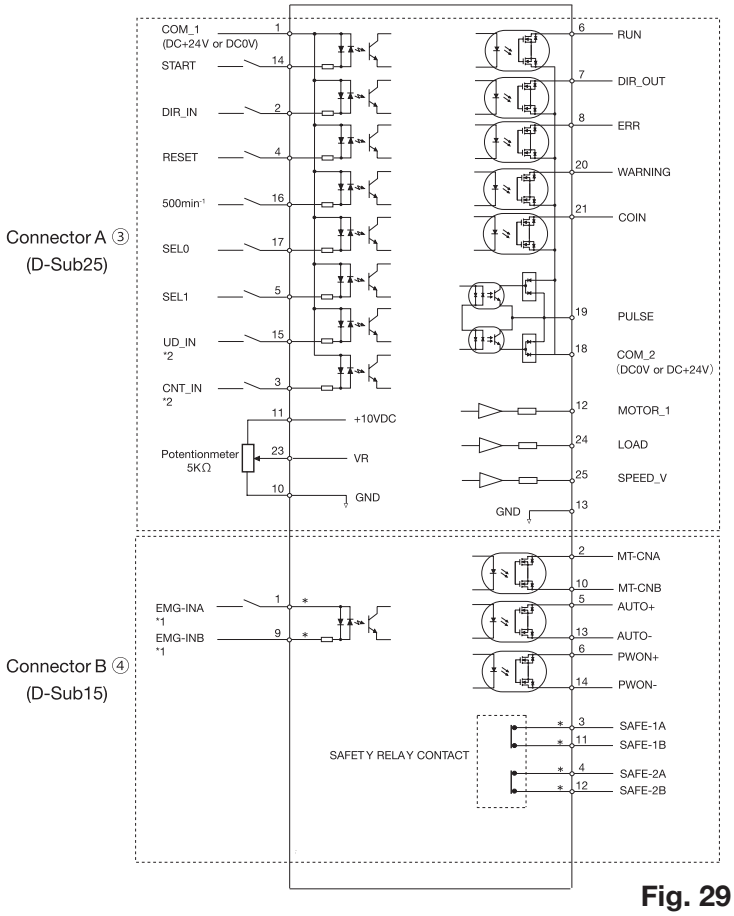

Fig. 29

*1 When using the "EMG - IN" Signal, set parameter P9. (Refer to P87 "15 - 4 ⑨ P9 Selection of Emergency Stop Function" sectional.)

*2 When using the "UD_IN and CNT_IN" Signal, set parameter P5. (Refer to P85 "15 - 4 ⑤ P5 Selection of External Speed Control Mode" section of the E3000 CONTROLLER Operation Manual.)

(3) Input / Output Signal

① Input Signal

There are 8 different input signals : "Rotate Command (START)", "Rotating Direction Setting (DIR_IN)", "Rotates Motor at " Centering "speed (500min^{-1})", "Error Release (RESET)", "UP / DOWN Signal for Setting Motor Speed (UD_IN)", "Count Pulse Signal for Setting Motor Speed (CNT_IN)", "Motor Select 0 (SEL0)", and "Motor Select 1 (SEL1)". These signals are DC+24V signals from an external signal source. Please use a separate power source that is capable of supplying DC+24V ±10%, 100mA. Refer to Fig.30 for connections.

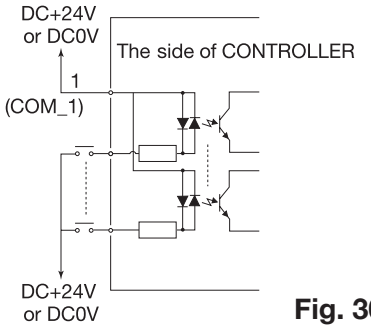

Fig. 30

② Output Signal I

There are 5 different output signals : "Rotating (RUN)", "Rotating Direction (DIR_OUT) ", "Error (ERR)", "Warning (WARNING)" and "Speed Achievement (COIN)". There signals are MOSS Relay Contact Connections. The output current can be connected to either sinking or sourcing.

Voltage and Current Specifications

- Applied Voltage (V) ≦ DC+30V
- Working Current (Ip) ≦ 100mA

Use an external power source for output circuits.
It is recommended to use the same DC+24V power source used for input signals. Please refer to Fig. 31 for connections.

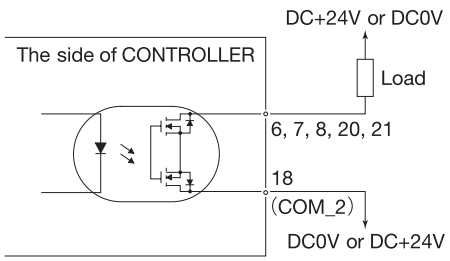

Fig. 31

③ Output Signal Ⅱ

Refer to Fig. 32 regarding the Output Signal of the "Rotating Pulse (PULSE)". The output signal can be connected for either sinking or sourcing.
Voltage and Current Specifications

- Applied Voltage (V) ≦ DC+30V
- Working Current (Ip) ≦ 50mA

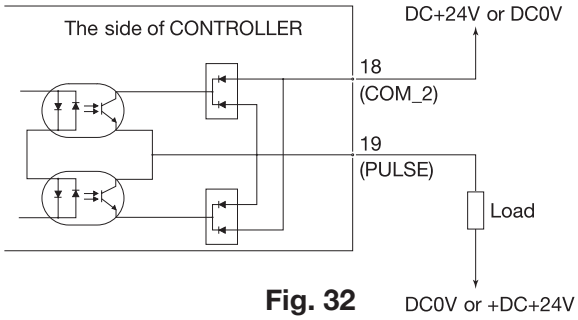

Fig. 32

④ Motor Speed Control Signal

Rotation Speed can be selected by, applying analog voltage to the "Motor Speed Control Voltage (VR)" Refer to Fig. 33, 34 for connections. Refer to Fig. 35, 36 about relationship between Motor Speed and Control Signal.

⚠ CAUTION

When applying the DC0V to DC+10V, never input more than DC+10V (Fig.34). This will cause serious damage to the I/O Board in the CONTROLLER.

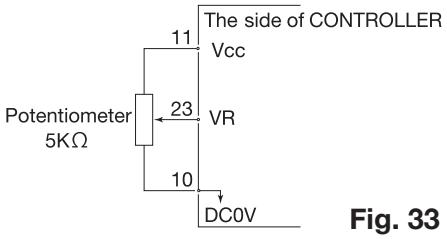

Fig. 33

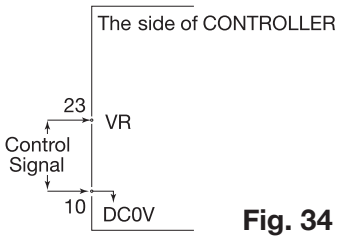

Fig. 34

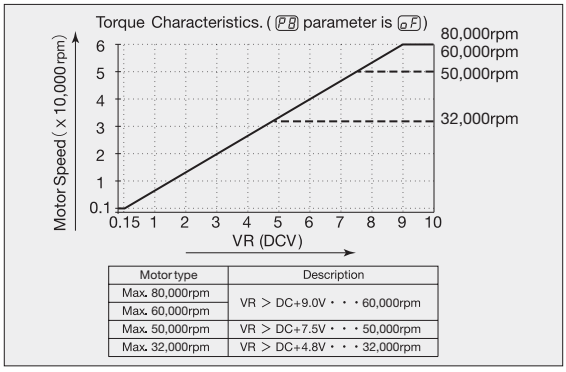

Fig. 35

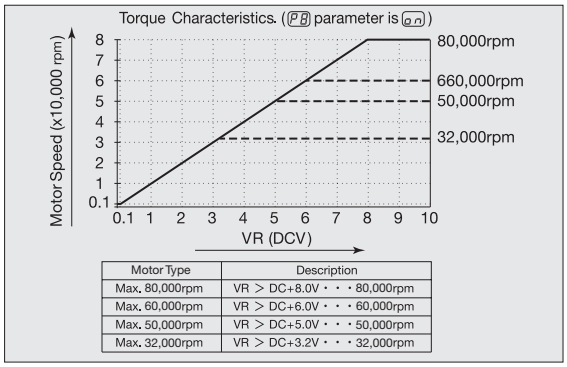

Fig. 36

⑤ Analog Monitor Signals

There are 3 types of monitoring signals : "Motor Current Monitor (MOTOR_I)", "Torque Load Monitor (LOAD)", and "Rotating Speed Analog Monitor Voltage (SPEED_V)". Please refer to Fig. 37 for connections.

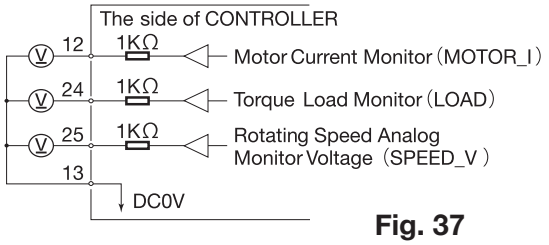

Fig. 37

13-2 External Input / Output Connector B

(1) Details of External Input / Output Connector B Signals

⚠ WARNING

- **DO NOT connect any circuit other than SELV (DC+24V) (Safety Extra Low Voltage) to the External Input / Output Connector B of the CONTROLLER. This will cause I/O board damage in the CONTROLLER.**
- **Do not supply over voltage or over current into the input / output circuit. Always install a LOAD (resistor) to the output circuit to eliminate the chance of damage to the CONTROLLER.**

⚠ CAUTION

Input / Output Connector B DOES NOT use Pin No.7, No.8, and No.15. If pin No.7, No.8, and No.15 are connected, the CONTROLLER will be damage.

Table. 4

Pin No.	Code	Function	Input / Output	Description	
1	EMG-INA	Emergency Stop A	Input	External Power Source input for Emergency Stop Signal or Emergency Stop Signal OFF (Open)	External Power Source input for Emergency Stop Signal or Emergency Stop Signal. Normal Operation ON (Closed), Emergency OFF (Open). When using the Emergency Stop Signal, set parameter P9. (Refer to P87 "15 - 4 P9 Selection of Emergency Stop Function "section.)
2	MT-CNA	Motor Connect Contact A	Output	Continuity, OFF (Open), between Pin No. 2 and Pin No. 10 the motor is connected.	When there is continuity, OFF, between Pin No. 2 and Pin No. 10 the elected motor is connected, if no continuity the motor is disconnected or the motor cord is broken.
3	SAFE-1A	Safety Relay Contact 1A	Output	Pin No.3 and Pin No. 11 continuity ON (Closed) Safety Relay is OFF	When there is continuity between Pin No. 3 and Pin No. 1 ON (Closed) Safety Relay is OFF (System Stopped), no continuity Safety Relay is OFF (Open) Normal Operation.
4	SAFE-2A	Safety Relay Contact 2A	Output	Pin No. 4 and Pin No. 12 continuity ON (Closed) Safety Relay is OFF	When there is continuity between Pin No. 4 and Pin No. 12 ON (Closed) Safety Relay is OFF (System Stopped), no continuity Safety Relay is OFF (Open) Normal Operation.
5	AUTO +	Control Mode AUTO Signal (+)	Output	Control Mode AUTO Pin No. 5 and Pin No. 13 are ON (Closed)	When Control Mode AUTO is being used, this Pin No. 5 and Pin No.13 are ON (Closed).
6	PWON +	CONTROLLER Power Source Monitor (+)	Output	ON (Closed) : Main Power Supply is connected OFF (Open) : Main Power Supply is disconnected	If the Main Power Switch is ON, Pin No. 6 and Pin No. 14 are ON (Closed).
7	Not Used	—	—	—	***Note : Never use pin labeled not used.**
8	Not Used	—	—	—	***Note : Never use pin labeled not used.**
9	EMG-INB	Emergency Stop B	Input	External Power Source input for Emergency Stop Signal or Emergency Stop Signal OFF (Open)	External Power Source input for Emergency Stop Signal or Emergency Stop Signal. Normal Operation ON (Closed), Emergency OFF (Open). When using the Emergency Stop Signal, set parameter P9. (Refer to P87 " 15 - 4 P9 Selection of Emergency Stop Function" section.)
10	MT-CNB	Motor Connect Contact B	Output	Continuity, OFF (Open), between Pin No. 2 and Pin No. 10 the motor is connected.	When there is continuity, OFF, between Pin No. 2 and Pin No.10 the selected motor is connected, if no continuity the motor is disconnected or the motor cord is broken.
11	SAFE-1B	Safety Relay Contact 1B	Output	Pin No. 3 and Pin No. 11 continuity ON (Closed) Safety Relay is OFF	When there is continuity between Pin No. 3 and Pin No. 11 ON (Closed) Safety Relay is OFF (System Stopped), no continuity Safety Relay is OFF (Open) Normal Operation.
12	SAFE-2B	Safety Relay Contact 2B	Output	Pin No. 4 and Pin No. 12 continuity ON (Closed) Safety Relay is OFF	When there is continuity between Pin No. 4 and Pin No. 12 ON (Closed) Safety Relay is OFF (System Stopped), no continuity Safety Relay is OFF (Open) Normal Operation.

Pin No.	Code	Function	Input / Output	Description	
13	AUTO -	Control Mode AUTO Signal (-)	Output	Control Mode AUTO Pin No. 5 and Pin No. 13 are ON (Closed)	When Control Mode AUTO is being used, this Pin No. 5 and Pin No. 13 are ON (Closed).
14	PWON -	CONTROLLER Power Source Monitor (-)	Output	ON (Closed) : Main Power Supply is connected OFF (Open) : Main Power Supply is disconnected	If the Main Power Switch is ON, Pin No. 6 and Pin No. 14 are ON (Closed).
15	Not Used	—	—	—	***Note : Never use pin labeled not used.**

(2) Input / Output Signals

① Output Signal

PIN No. 2-10, 5-13, 6-14

There are 3 different output signals :"Motor Signal Connect Contact (MT-CN)", "Control Mode AUTO (AUTO)", and "CONTROLLER Power Source Monitor (PWON)".
These signals are MOSS Relay Contact Connections.
The output current can be connected for either sinking or sourcing.
Voltage and Current Specifications

- Applied Voltage (V) ≦ DC+30V
- Working Current (Ip) ≦ 100mA

Use an external power source for output circuits. It is recommended to use a separate power supply Input/Output Connector A.
Please refer to Fig.38 for connections.

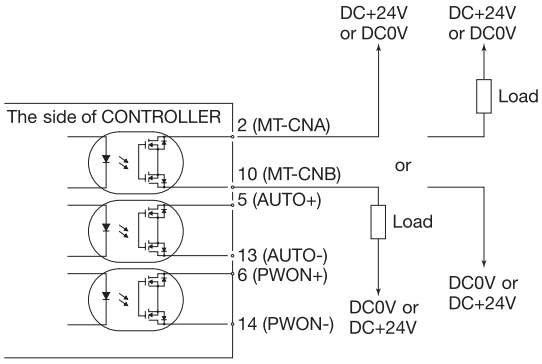

Fig. 38

② Emergency Stop Signal Input

PIN No. 1-9

This signal is a switched DC+24V output.
Please use a separate power source that is capable of applying DC+24V±10%,
50mA. Refer to Fig. 39 below for connections.
Normal Operation circuit is ON (Closed) Emergency Stop circuit is OFF (Open).
If the Emergency Stop Signal is OFF (Open) the Safety Relay is OFF and the power supply to the motor is interrupted and the motor stops.

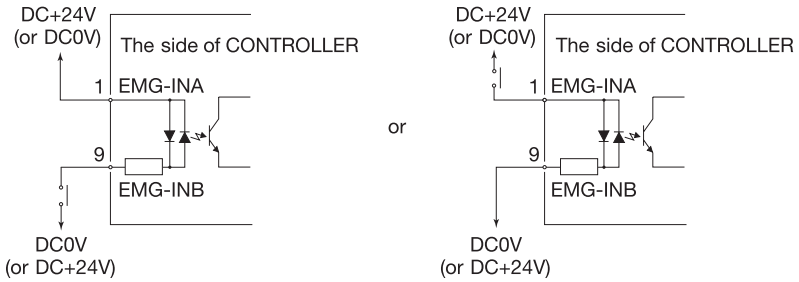

Fig. 39

③ Safety Relay Signal

⚠ CAUTION

If the Emergency Stop Function is not installed, the Emergency Stop Signal (EMG-IN) will not function. If enabling the Emergency Stop Function, it is necessary to set parameter P9 .
(Refer to P87 "15-4 ⑨ P9 Selection of Emergency Stop Function" section.)

PIN No. 3-11, 4-12

· The Safety Relay will be ON or OFF depending on the state of the "Emergency Stop" Pin No.1-9.
· When there is continuity between Pin No.3 (SAFE-1A) and Pin No.11 (SAFE-1B) or between Pin No.4 (SAFE-2A) and Pin No.12 (SAFE-2B) the motor is off. If there is no continuity between these pairs of pins then the system is operating normally.
· If the Emergency Stop Signal is OFF (Open) the Safety Relay will be OFF (Open) and the motor power will be interrupted and the motor will stop.
· If the (NO) Normally Open contacts of the Safety Relay are welded together by an over load or short circuit the (NC) Normally Closed contacts separation are maintained with more than 0.5 mm spacing by the relay's recoil mechanism.
· The voltage / current specifications of Pin No. 3-11 and Pin No.4-12.
Applied Voltage (V) ≦ DC+30V
Working Current (Ip) ≦ 2A

Refer to Fig. 40 below for connections.

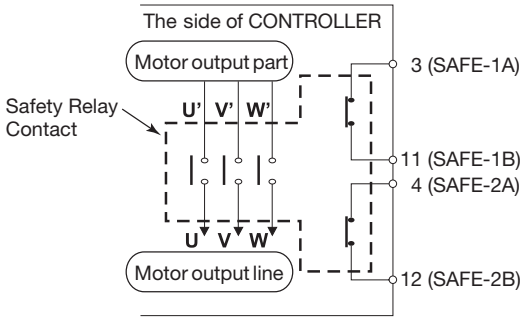

Fig. 40

* Safety Relay
If an N - O contact becomes welded, all N - C contacts will maintain a minimum distance of 0.5 ㎜ when the coil is not energized.
N - O contacts (Normally - opened contacts) : Contacts of U - U', V - V', W - W'.
N - C contacts (Normally - closed contacts) : Contacts of (SAFE - 1A) - (SAFE - 1B), (SAFE - 2A) - (SAFE-2B)

* Machine Safety Circuit is possible when using the Safety Relay Contacts Output
· When an Emergency Stop Signal input that is coupled to a door open switch of an Industrial Machine, the Safety Relay will energize and open the Motor Power Line circuit.
· Contact outputs ((SAFE - 1A) - (SAFE - 1B), (SAFE - 2A) - (SAFE - 2B)) of the N - C contacts can be used for detecting the opening of the Motor Power Line. If N - O contacts become welded, contact outputs will maintain an OFF condition (Open), by Forced Guide Mechanism.
Therefore, Safety Relay can be used as an open signal of a movable guard or operator door with a locking (switch) mechanism for Industrial Machinery.

13-3 External Input / Output Connector Specifications

⚠ CAUTION

- **To minimize RF interference and noise, please keep the length of the cables as short as possible and route them separately or as far away as possible from high voltage electrical cables.**
- **Use only shielded cables to minimize RF interference and noise. Connect the shield to the plug cover.**
- **Connect the shielded line to the Input / Output connector (shielding ground wire). Do not connect another shielded line to any externally powered instrument.**

① External Input / Output Connector A ③
Plug Part Number : XM3A - 2521 OMRON (or other similar high - quality product)
Cover Part Number : XM2S-2511 OMRON (or other similar high - quality product)

② External Input / Output Connector B ④
Plug Part Number : XM3A - 1521 OMRON (or other similar high - quality product)
Cover Part Number : XM2S - 1511 OMRON (or other similar high - quality product)
Please prepare a Cover and Plug.
The shielding should be connected to the Cover.
*Use Mounting Screws that are (M2.6)
Fasten the Connector to the CONTROLLER using Mounting Screws (M2.6).

13-4 External Input / Output Connector A / B Pin configuration

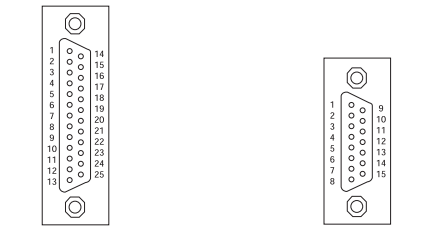

Connector A ③ Connector B ④

Fig. 41

NE214 CONTROLLER - OPERATION MANUAL [OM-K0681]
External Input / Output Control Signal Specifications (7-p10~p17)

16. EXTERNAL INPUT / OUTPUT CONNECTOR

16-1 External Input / Output Connector A ③

(1) Details of External Input / Output Connector A ③ Signals

⚠ WARNING

- **DO NOT connect any circuit other than SELV (DC+24V) (Safety Extra Low Voltage) to the External Input / Output Connector A ③ of the CONTROLLER. This will cause I / O board damage in the CONTROLLER.**
- **Do not supply over voltage or over current into the input / output circuit. Always install a LOAD (resistor) to the output circuit to eliminate the chance of damage to the CONTROLLER.**

⚠ CAUTION

Input / Output Connector A ③ do not use Pin No. 22. If pin No. 22 is connected, the CONTROLLER will be damaged.

Table. 6

Pin No.	Code	Function	Input / Output	Description	
1	COM_1	External Power source for External input	Input	DC0V or DC+24V	Power source to be used for External Inputs Signals.
2	DIR_IN	Rotating Direction Setting	Input	' OFF (Open) ' : FWD. ' ON (Closed) ' : REV.	Controls the rotational direction of the motor spindle. Setting parameter [P8], can start with reverse rotation. (Refer to P107 " 18 - 4 ⑧ [P8] Selection of External Motor Start Signal Control Mode " section.)
3	VR2	Motor No. 2 Speed Control Voltage	Input	Set rotating speed (× 10,000rpm) = 1/16 × (9VR-1) 0.28V or less : 1,000rpm 9V or more : 50,000rpm 0V VR≦ 10V≦	Sets rotating speed of Motor No. 2. When using 30,000rpm motor speed, set parameter [PA] (Refer to P108 " 18 - 4 ⑩ [PA] Selection of Motor Speed Control Voltage / DC+10V Signal Method "). Refer to P87 Fig. 27, 28 regarding relationship between Motor Speed and Motor Speed Control Voltage (VR).
4	RESET	Error Release	Input	' ON (Closed) ' → ' OFF (Open) '	Error Code can be released and the system restarted by toggling this signal OFF and ON. Error will not be released until cause of the error has been removed.
5	SEL1	Count Pulse Signal for Setting Motor Speed (CNT_IN)	Input	—	One pulse will increase or decrease 1,000rpm in Spindle Speed depending on parameter [P7] setting. (Refer to P106 " 18 - 4 ⑦ [P7] Selection of External Speed Control Mode " section.)
		Speed Point Select 1 (POINT 1)			Speed Point Signal can be selected. Speed Point (When using Motor No. 1, "[1]" - "[14]", and when using Motor No. 2, "[21]" - "[24]") can be selected by POINT 0 and POINT 1 signal combination. Refer to P79 " 15 - 3 - 2 (4) ③ Set by the Speed Point Signal " section. Need to set parameter [P7] . (Refer to P106 " 18 - 4 ⑦ [P7] Selection of External Speed Control Mode " section.)
6	RUN	Rotating	Output	' OFF (Open) ' : Stop ' ON (Closed) ' : Rotating	Output shows that the motor is rotating.
7	DIR_OUT	Rotating Direction	Output	' OFF (Open) ' : FWD. ' ON (Closed) ' : REV.	Output shows the direction of the Motor is rotating.
8	ERR	Error	Output	' OFF (Open) ' : Error ' ON (Closed) ' : Normal	Output shows that error has occurred. Error code will be displayed on Control Panel ②. When setting parameter [P1], Error Output Mode can be changed. (Refer to P104 " 18 - 4 ① [P1] Setting of Error Output Mode " section.)
9	SEL_MT	Motor Select	Output	' OFF (Open) ' : MOTOR1 ' ON (Closed) ' : MOTOR2	Output shows that the selected motor is MOTOR No. 1 or MOTOR No. 2.

Pin No.	Code	Function	Input / Output	Description	
10	GND	Internal GND for Motor Speed Control Voltage	Output	Internal CONTROLLER GND	This GND will be used for " Motor Speed Control Voltage (VR) ".
11	Vcc	Internal Power Source for Motor Speed Control Voltage	Output	Internal Power Source : DC+10V	Internal Power Source for " Motor Speed Control Voltage (VR) ".
12	MOTOR_I	Motor Current Monitor	Output	2Amp / V, 0V ≦ MOTOR_I ≦ 10V	Output Motor Current Monitor with Analog Monitor Voltage. 2Amp / 1V. Max. 20Amp.
13	GND	Internal GND for Analog Monitor	Output	Internal CONTROLLER GND	This GND will be used for analog monitor (MOTOR_I ,SPEED_V, and LOAD).
14	START	Rotate Command	Input	' OFF (Open) ' : Stop ' ON (Closed) ' : Start	Motor Start and Motor Stop Signal Setting parameter [P8], can start with forward rotation. (Refer to P107 " 18 - 4 ⑧ [P8] Selection of External Motor Start Signal Control Mode " section.)
15	MT_SEL	Motor Select	Input	' OFF (Open) ' : MOTOR1 ' ON (Closed) ' : MOTOR2	Select MOTOR No. 1 or MOTOR No. 2.
16	500 rpm	Rotates Motor at "Centering " speed	Input	' ON (Closed) ' : 500min^{-1} (rpm)	Set motor rotation speed will be 500min^{-1}(rpm). Use the Centering Mode.
17	SEL0	UP / DOWN Signal for Setting Motor Speed (UD_IN)	Input	—	Determines speed up or speed down. Need to set parameter [P7]. (Refer to P106 "18 - 4 ⑦ [P7] Selection of External Speed Control Mode" section.)
		Speed Point Select 0 (POINT 0)			Speed Point Signal can be selected. Speed Point (When using Motor No. 1, "[1]" - "[4]", and when using Motor No. 2, "[21]" - "[24]") can be selected by POINT 0 and POINT 1 signal combination. Refer to P79 " 15 - 3 - 2 (4) ③ Set by the Speed Point Signal " section. Need to set parameter [P7]. (Refer to P106 " 18 - 4 ⑦ [P7] Selection of External Speed Control Mode " section.)
18	COM_2	External Power Source for External Output	Input	DC0V or DC+24V	Power source to be used for External outputs Signals.
19	PULSE	Rotating Pulse	Output	1 pulse / rotation	1 revolution of the motor generates one pulse. Duty 50%.
20	WARNING	WARNING	Output	OFF (Open) : Normal Operation ON (Closed) : Warning	Output shows that warning has occurred. Warning code will be displayed on Control Panel②.
21	COIN	Speed Achievement	Output	OFF (Open) : Set speed not achieved ON (Closed) : Set speed achieved	Shows that the Motor has achieved more than 90% of the set speed.
22	Not used	—	—	—	***Note : Never use a pin labeled not used.**
23	VR1	Motor No.1 Speed Control Voltage	Input	Set rotating speed (x 10,000min^{-1}) = 1 / 16 x (9VR-1) 0.28V or less : 1,000min^{-1} 9V or more : 50,000min^{-1} 0V ≦ VR ≦ 10V	Sets rotating speed of the motor. When using 30,000min^{-1} of motor speed, setting parameter [PA] (Refer to P108 " 18 - 4 ⑩ [PA] Selection of Motor Speed Control Voltage / DC+10V Signal Method " section.) Refer to P87 Fig. 27, 28 about relationship between motor speed and control signal.
24	LOAD	Torque Load Monitor	Output	Torque Load Monitor (%) = Torque Load Monitor Voltage × 20	Shows that the torque being applied to the analog motor. 20%/ V 100% (rating) / DC+ 5V Torque Load Monitor : 0 - 200% (0V≦ LOAD ≦10V)
25	SPEED_V	Rotating Speed Analog Monitor Voltage	Output	10,000rpm / V	Output the rotation speed of rotating motor with Analog Monitor Voltage. 10,000rpm /V 0V ≦ SPEED_V ≦ 10V

(2) Input / Output Diagram

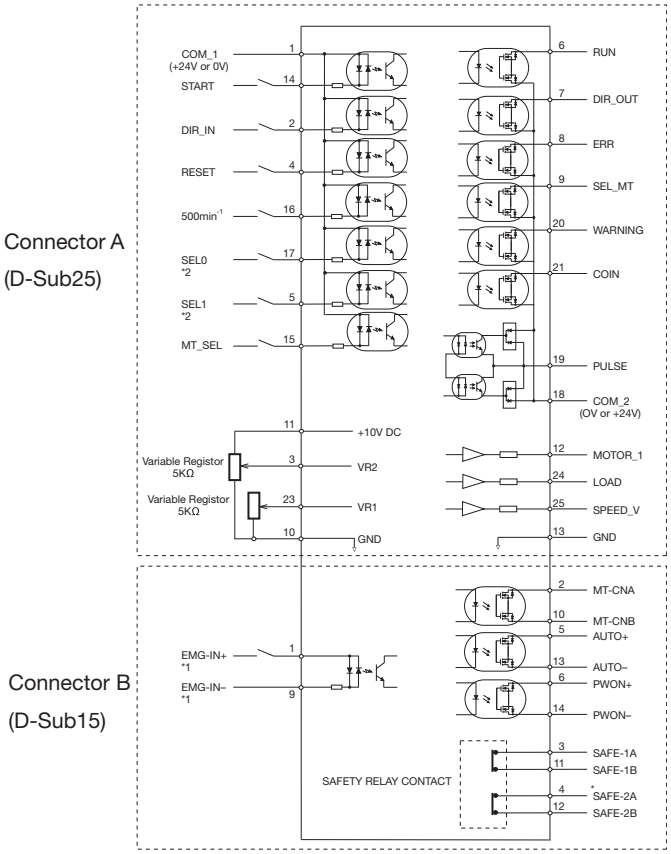

*1 When using the "EMG - IN" Signal, set parameter Pb. (Refer to P108 "18 - 4 ⑪ Pb Selection of Emergency Stop Function" sectional.)

*2 When using SEL 0 as the UP / DOWN Signal for Setting Motor Speed (UD_IN) and SEL 1 as Count Pulse Signal for Setting Motor Speed (CNT_IN), set parameter Pn. (Refer to P106 "18 - 4 ⑦ Pn Selection of External Speed Control Mode ").

Fig. 21

(3) Input / Output Signal

① Input Signal

There are 7 different input signals : " Rotate Command (START) ", " Rotating Direction Setting (DIR_IN) ", " Rotates Motor at " Centering " speed (500rpm) ", " Error Release (RESET) ", " Speed Point Select 0 (POINT 0) ", " Speed Point Select 1 (POINT 1) " and " Motor Select (MT_SEL) ". These signals are DC+24V signals from an external signal source. Please use a separate power source that is capable of supplying DC+24V ± 10%, 100mA. Refer to Fig. 22 for connections.

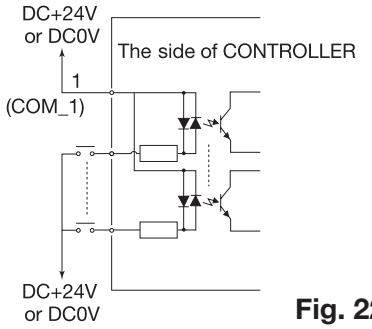

Fig. 22

② Output Signal Ⅰ

There are 6 separate output signals : " Rotating (RUN) ", " Rotating Direction (DIR_OUT) ", " Error (ERR) ", " WARNING (WARNING) ", " Speed Achievement (COIN) " and " Motor Select (SEL_MT) ". These signals are MOSS Relay Contact Connections. The output current can be connected to either sinking or sourcing.

Voltage and Current Specifications

- Applied Voltage (V) ≦ DC+30V
- Working Current (Ip) ≦ 100mA

Use an external power source for output circuits. It is recommended to use the same DC+24V power source used for input signals. Please refer to Fig. 23 for connections.

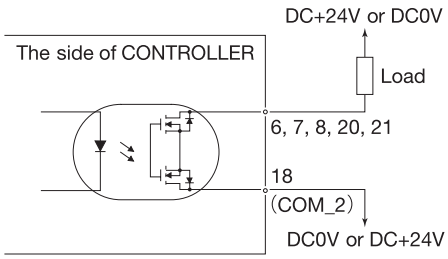

Fig. 23

③ Output Signal Ⅱ

Refer to Fig. 24 regarding the Output Signal of the "Rotating Pulse (PULSE)". The output signal can be connected for either sinking or sourcing.
Voltage and Current Specifications

- Applied Voltage (V) ≦ DC+30V
- Working Current (Ip) ≦ 50mA

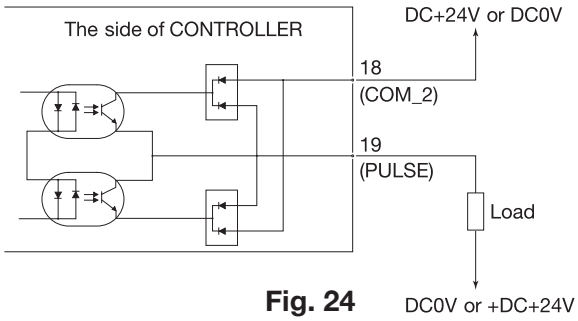

Fig. 24

④ Motor Speed Control Signal

Rotation Speed can be selected by, applying analog voltage to VR1 and VR2. Refer to Fig. 25, 26 for connections. Refer to Fig. 27, 28 for the relationship between Motor Speed and " Motor Speed Control Voltage (VR) ".

⚠ CAUTION

When applying the VR, never input more than DC+10V to the CONTROLLER (Fig. 26). This will cause serious damage to the I / O Board in the CONTROLLER.

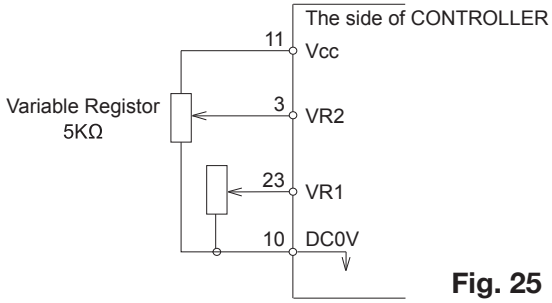

Fig. 25

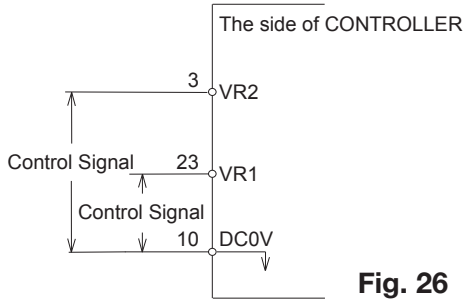

Fig. 26

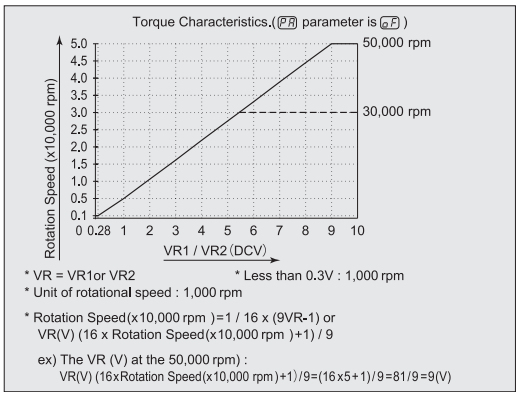

Fig. 27

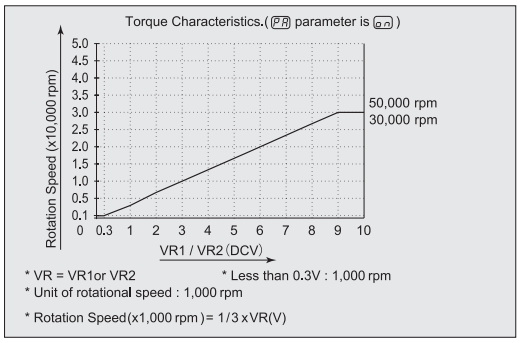

Fig. 28

⑤ Analog Monitor Signals

There are 3 types of monitoring signals : " Motor Current Monitor (MOTOR_I) ", " Torque Load Monitor (LOAD) ", and " Rotating Speed Analog Monitor Voltage (SPEED_V) ". Please refer to Fig. 29 for connections.

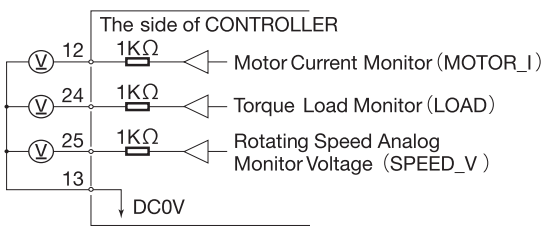

Fig. 29

16-2 External Input / Output Connector B ④

(1) Details of External Input / Output Connector B ④ Signals

⚠ WARNING

- **DO NOT connect any circuit other than SELV (DC+24V) (Safety Extra Low Voltage) to the External Input / Output Connector B ④ of the CONTROLLER. This will cause I / O board damage in the CONTROLLER.**
- **Do not supply over voltage or over current into the input / output circuit. Always install a LOAD (resistor) to the output circuit to eliminate the chance of damage to the CONTROLLER.**

⚠ CAUTION

Input / Output Connector B ④ DOES NOT use Pin No. 7, No. 8, and No. 15. If pin No. 7, No. 8, and No. 15 are connected, the CONTROLLER will be damage.

Table. 7

Pin No.	Code	Function	Input / Output	Description	
1	EMG-INA	Emergency Stop A	Input	External Power Source input for Emergency Stop Signal or Emergency Stop Signal ' OFF (Open) '	External Power Source input for Emergency Stop Signal or Emergency Stop Signal. Normal Operation ' ON (Closed) ', Emergency ' OFF (Open) '. When using the Emergency Stop Signal, set parameter [P 5]. (Refer to P108 " 18 - 4 ⑪ [P 5] Selection of Emergency Stop Function " section.)
2	MT-CNA	Motor Connect Contact A	Output	Continuity, ' OFF (Open) ' , between Pin No. 2 and Pin No.10 the motor is connected.	When there is continuity, OFF, between Pin No. 2 and Pin No. 10 and the selected motor is connected, if no continuity is present, the motor is disconnected or the motor cord is broken.
3	SAFE-1A	Safety Relay Contact 1A	Output	Pin No.3 and Pin No. 11 continuity ' ON (Closed) ' Safety Relay is OFF	When there is continuity between Pin No. 3 and Pin No. 11 are ' ON (Closed) ' Safety Relay is OFF (System Stopped), no continuity Safety Relay is ' OFF (Open) ' Normal Operation.
4	SAFE-2A	Safety Relay Contact 2A	Output	Pin No. 4 and Pin No. 12 continuity ' ON (Closed) ' Safety Relay is OFF	When there is continuity between Pin No. 4 and Pin No. 12 are ' ON (Closed) ' Safety Relay is OFF (System Stopped), no continuity Safety Relay is ' OFF (Open) ' Normal Operation.
5	AUTO +	Control Mode AUTO Signal (+)	Output	Control Mode AUTO Pin No. 5 and Pin No. 13 are ' ON (Closed) '	When Control Mode AUTO is being used, this Pin No. 5 and Pin No. 13 are ' ON (Closed) '.
6	PWON +	CONTROLLER Power Source Monitor (+)	Output	Pin No. 6 and Pin No. 14 are ' ON (Closed) ' : Main Power Supply is connected '	If the Main Power Switch ⑨ is ON, Pin No. 6 and Pin No. 14 are ' ON (Closed) '.
7	Not Used	—	—	—	***Note : Never use pin labeled not used.**
8	Not Used	—	—	—	***Note : Never use pin labeled not used.**
9	EMG-INB	Emergency Stop B	Input	External Power Source input for Emergency Stop Signal or Emergency Stop Signal ' OFF (Open) '	External Power Source input for Emergency Stop Signal or Emergency Stop Signal. Normal Operation ' ON (Closed) ', Emergency ' OFF (Open) '. When using the Emergency Stop Signal, set parameter [P 5] . (Refer to P108 " 18 - 4 ⑪ [P 5] Selection of Emergency Stop Function " section.)
10	MT-CNB	Motor Connect Contact B	Output	Continuity, ' OFF (Open) ', between Pin No. 2 and Pin No. 10 the motor is connected.	When there is continuity, OFF, between Pin No. 2 and Pin No. 10 are ' OFF (Open) ', the selected motor is connected, if no continuity the motor is disconnected or the motor cord is broken.
11	SAFE-1B	Safety Relay Contact 1B	Output	Pin No. 3 and Pin No. 11 continuity ' ON (Closed) ' Safety Relay is OFF	When there is continuity between Pin No. 3 and Pin No. 11 are ' ON (Closed) ' Safety Relay is OFF (System Stopped), no continuity Safety Relay is ' OFF (Open) ' Normal Operation.
12	SAFE-2B	Safety Relay Contact 2B	Output	Pin No. 4 and Pin No. 12 continuity ' ON (Closed) ' Safety Relay is OFF	When there is continuity between Pin No. 4 and Pin No. 12 are ' ON (Closed) ' the Safety Relay is OFF (System Stopped). If there is no continuity, Safety Relay is ' OFF (Open) ' Normal Operation.

Pin No.	Code	Function	Input / Output	Description	
13	AUTO -	Control Mode AUTO Signal (-)	Output	Control Mode AUTO Pin No. 5 and Pin No. 13 are ' ON (Closed) '	When Control Mode AUTO is being used, this Pin No. 5 and Pin No. 13 are ' ON (Closed) '.
14	PWON -	CONTROLLER Power Source Monitor (-)	Output	Pin No. 6 and Pin No.14 are ' ON (Closed) ' : Main Power Supply is connected	If the Main Power Switch ⑨ is ON, Pin No. 6 and Pin No. 14 are ' ON (Closed) '.
15	Not Used	—	—	—	***Note : Never use pin labeled not used.**

(2) Input / Output Signals

① Output Signal

Pin No. 2-10, 5-13, 6-14

There are 3 different output signals :"Motor Connect Contact (MT-CN)", "Control Mode AUTO Signal (AUTO)", and "CONTROLLER Power Source Monitor (PWON)".
These signals are MOSS Relay Contact Connections.
The output current can be connected for either sinking or sourcing.
Voltage and Current Specifications

- Applied Voltage (V) ≦ DC+30V
- Working Current (Ip) ≦ 100mA

Use an external power source for output circuits. It is recommended to use a separate power supply Input / Output Connector B ④. Please refer to Fig. 30 for connections.

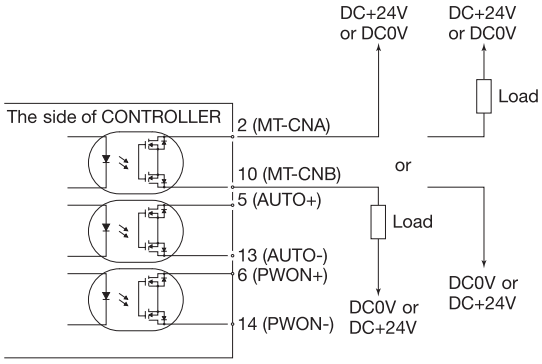

Fig. 30

② Emergency Stop Signal Input

Pin No. 1-9

This signal is a switched DC+24V output.
Please use a separate power source that is capable of applying DC+24V±10%,

50mA. Refer to Fig. 31 below for connections.
Normal Operation circuit is ' ON (Closed) ' Emergency Stop circuit is ' OFF (Open) '.
If the Emergency Stop Signal is ' OFF (Open) ' the Safety Relay is OFF and the power supply to the motor is interrupted and the motor stops.

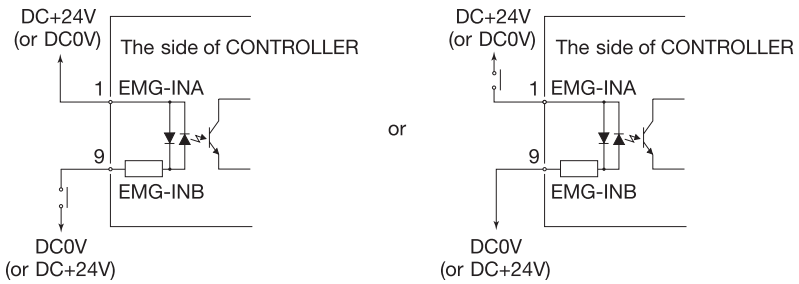

Fig. 31

③ Safety Relay Signal

⚠ CAUTION

If the Emergency Stop Function is not installed, the Emergency Stop Signal (EMG - IN) will not function. If enabling the Emergency Stop Function, it is necessary to set parameter P6 (Refer to P108 " 18 - 4 ⑪ P6 Selection of Emergency Stop Function " section.)

Pin No. 3-11, 4-12

· The Safety Relay will be ON or OFF depending on the state of the " Emergency Stop (Pin No. 1 : EMG - INA - Pin No. 9 : EMG - INB) ".
· When there is continuity between Pin No. 3 (SAFE - 1A) and Pin No. 11 (SAFE - 1B) or between Pin No. 4 (SAFE - 2A) and Pin No. 12 (SAFE - 2B) the motor is off. If there is no continuity between these pairs of pins then the system is operating normally.
· If the Emergency Stop Signal is ' OFF (Open) ' the Safety Relay will be ' OFF (Open) ' and the motor power will be interrupted and the motor will stop.
· If the (NO) Normally Open contacts of the Safety Relay are welded together by an over load or short circuit the (NC) Normally Closed contacts separation are maintained with more than 0.5mm spacing by the relay's recoil mechanism.
· The voltage / current specifications of Pin No. 3 - 11 and Pin No. 4 - 12.
Applied Voltage (V) ≦ DC+30V
Working Current (Ip) ≦ 2A

Refer to Fig. 32 below for connections.

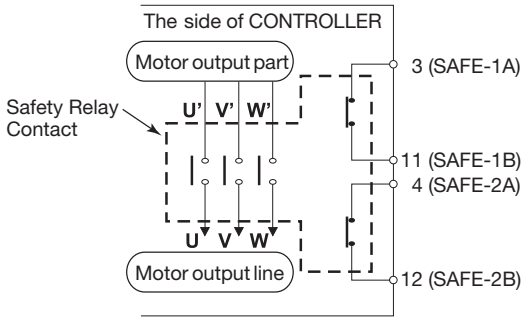

Fig. 32

* Safety Relay
If an N - O contact becomes welded, all N - C contacts will maintain a minimum distance of 0.5 ㎜ when the coil is not energized.
N - O contacts (Normally - opened contacts) : Contacts of U - U', V - V', W - W'.
N - C contacts (Normally - closed contacts) : Contacts of (SAFE - 1A) - (SAFE - 1B), (SAFE - 2A) - (SAFE-2B)

* Machine Safety Circuit is possible when using the Safety Relay Contacts Output
· When an Emergency Stop Signal input that is coupled to a door open switch of an Industrial Machine, the Safety Relay will energize and open the Motor Power Line circuit.
· Contact outputs ((SAFE - 1A) - (SAFE - 1B), (SAFE - 2A) - (SAFE - 2B)) of the N - C contacts can be used for detecting the opening of the Motor Power Line. If N - O contacts become welded, contact outputs will maintain an OFF (Open) condition, by Forced Guide Mechanism.
Therefore, Safety Relay can be used as an open signal of a movable guard or operator door with a locking (switch) mechanism for Industrial Machinery.

16-3 External Input / Output Connector Specifications

⚠ CAUTION

- **To minimize RF interference and noise, please keep the length of the cables as short as possible and route them separately or as far away as possible from high voltage electrical cables.**
- **Use only shielded cables to minimize RF interference and noise. Connect the shield to the plug cover.**
- **Connect the shielded line to the Input / Output connector (The shielded line is grounded). Do not connect another shielded line to any externally powered instrument.**

① External Input / Output Connector A ③
Plug Part Number : XM3A - 2521 OMRON (or other similar high - quality product)
Cover Part Number : XM2S - 2511 OMRON (or other similar high - quality product)

② External Input / Output Connector B ④
Plug Part Number : XM3A - 1521 OMRON (or other similar high - quality product)
Cover Part Number : XM2S - 1511 OMRON (or other similar high - quality product)
Please prepare a Cover and Plug.
The shielding should be connected to the Cover.
*Use Mounting Screws that are (M2.6)
Fasten the Connector to the CONTROLLER using Mounting Screws (M2.6).

16-4 External Input / Output Connector A ③ / B ④ Pin configuration

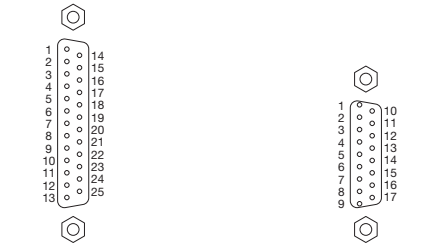

Connector A ③ Connector B ④

Fig. 33

E4000
External Input / Output Control Signal Specifications (7-p18~p23)

(1) Connector A

① Input / Output Connector A

Pin No.	Pin Name	Description	Input/Output	Signal	Function
1	COM_1	External Power Source for External	Input	0V or +24V DC	Power Source to be used for External Inputs.
2	DIR_IN	Rotating Direction Signal	Input	OFF (Open) : FWD. ON (Closed) : REV.	Controls the direction of rotation of the motor.
3	CNT_IN	Pulse speed change count signal	Input	OFF (Open)→ ON (Closed)	Speed of one pulse 100 rpm can be changed in speed mode of pulse signal. (Need to set parameter)
4	RESET	Error Release Signal	Input	ON (Closed) → OFF (Open)	Error code can be released and the system restarted by switching this signal OFF and ON.
5	SEL1	Speed Select Signal	Input	OFF (Open) ON (Closed)	Select motor speed by using both SEL1 and SEL0. (Refer to Table 2)
6	RUN	Rotating Signal	Output	ON (Closed) : Motor Rotating OFF (Open) : Motor Stopped	Voltage output shows that the motor is rotating.
7	DIR_OUT	Rotating Direction Signal	Output	OFF (Open) : FWD. ON (Closed) : REV.	Voltage output shows the direction the motor is rotating.
8	ERR	Error Signal	Output	ON (Closed) : Normal OFF (Open) : Error	Error has occurred. (*1) Error Code is displayed on the Digital Speed Display.
9	–	Not Used	–	–	———————— (*2)
10	GND	Internal GND	Output	Internal GND	This GND to be used for motor speed control circuit. (Refer to Fig.31)
11	VCC	Internal Power Source for Analog Signal	Output	+10V DC	Power Source for VR Output +10V DC
12	MOTOR_1	Motor Current Monitor	Output	0-10V DC 0V : 0A 10V : 20A	Voltage Output shows the motor current consumption. Output voltage is proportional to the motor current consumption.
13	GND	Internal GND	Output	Internal GND	This GND to be used for analog outputs (12, 24 and 25) circuit. (Refer to Fig.34)
14	START	Rotate Command Signal	Input	ON (Closed) : Rotation OFF (Open) : Stop	Starts and Stops motor rotation.
15	UD-IN	Pulse speed change up/down signal	Input	ON (Closed) : Speed Up OFF (Open) : Speed Down	When Cut-IN Signal is in, 1,000 rpm speed up.
16	500 rpm	Rotates Motor at 'Centering' Speed	Input	ON (Closed) : 500 rpm OFF(Open) : Normal Operation	Maintains constant 500 rpm motor speed for centering.
17	SEL0	Speed change point select signal 0	Input	OFF (Open) ON (Closed)	Select motor speed by using both SEL1 and SEL0. (Refer to Table 2) (Need to set parameter)
18	COM_2	Power Source for External Outputs	Output	0V or +24V DC	Power Source to be used for External Output Signals.
19	PULSE	Rotating Pulse	Output	1 pulse/rotation	1 revolution of the motor generates one pulse. Duty 50%
20	WARNING	Warning Signal	Output	OFF (Open) : Normal Operation ON (Closed) : Warning	This output shows a Warning has occurred. The Warning Code is shown on the Digital Speed Indicator.
21	COIN	Speed Achievement Signal	Output	ON (Closed) : Ordered Speed Achieved OFF (Open) : Ordered Speed Not Achieved	Voltage output shows that the motor has achieved more than 90% of the set speed.

Pin No.	Pin Name	Description	Input/Output	Signal	Function
22	–	Not Used	–	–	———————— (2)
23	VR	Motor Speed Control Signal	Input	0-10V DC	Sets rotating speed of Motor. Max.40,000 rpm: Motor Speed (rpm) = (BMS-4040/BMS-4040RA) $\frac{\text{Control Signal (DCV)}}{2}$ X10000 Max.20,000 rpm: Motor Speed (rpm)= (BMS-4020/BMS-4020RA) $\frac{\text{Control Signal (DCV)}}{4}$ X10000
24	LOAD	Torque Load Monitor	Output	0-10V DC 0V : 0% 10V : 200%	Voltage output shows the torque being applied to the motor. Load monitor voltage x 20 equals the torque load %. 20V=Load%
25	SPEED_V	Rotating Speed Monitor Voltage	Output	0-10V DC 10,000 rpm/ V	Voltage Output is proportional to the motor speed.

*1 Output logic of error signal can be set with the user parameter [P 1] setting. For details, refer to the setting of parameters section of E4000 Operation manual.

*2 ⚠ **Caution**

Never use the pins marked NOT USED.

Table 2
Speed point can be set with parameter setting [P5].

Speed Point	SEL1 (Pin No. 5)	SEL0 (Pin No. 17)
U1	OFF (Open)	OFF (Open)
U2	OFF (Open)	ON (Closed)
U3	ON (Closed)	OFF (Open)
U4	ON (Closed)	ON (Closed)

② Input / Output Diagram

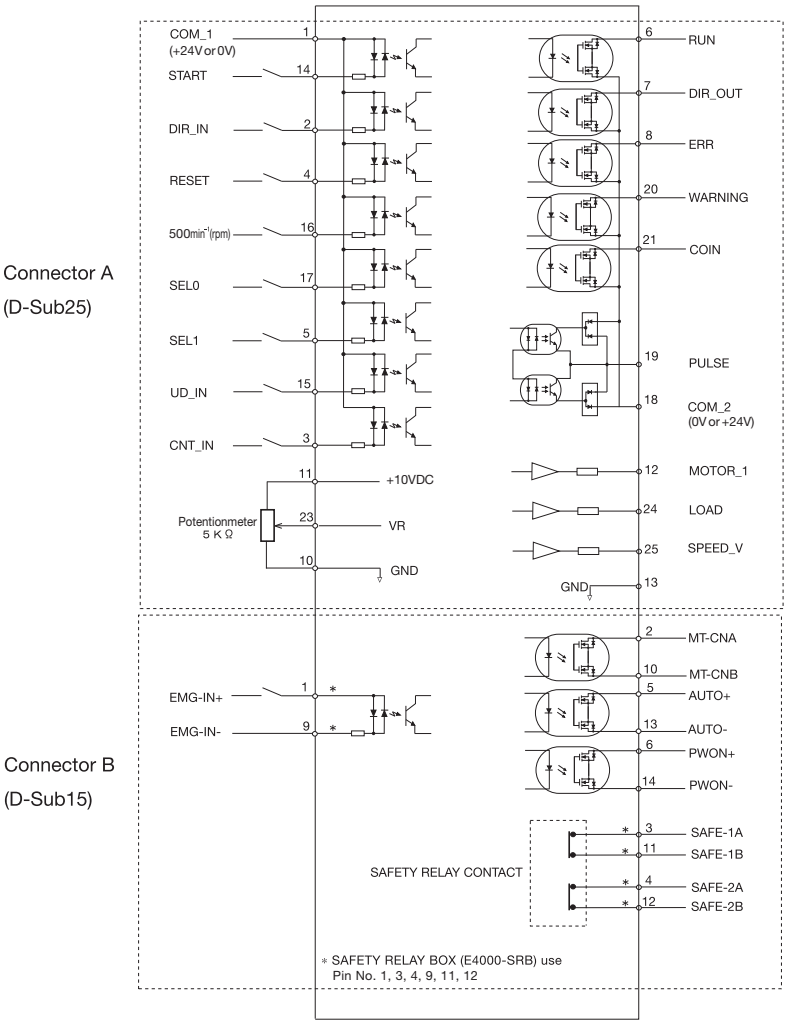

Fig. 27

③ Input / Output Signal

(1) Input Signal

There are 8 separate input signals : rotation command, rotation direction, error release, speed up-down signal, speed command pulse signal, Speed Select Signal 0, Speed Select Signal 1,500 rpm speed command. These signals are +24VDC signals from an external signal source.

Please use a separate power source that is capable of supplying 24VDC±10 %, 100mA. Refer to Figures below for connections.

∗By setting parameter, Motor Speed change is possible by pulse signal. If input “Speed up-down signal” “Speed Command pulse signal”.

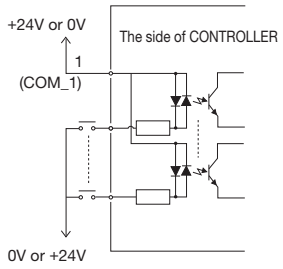

Fig. 28

(2) Output Signal Ⅰ

There are 5 separate output signals : rotating, rotating direction, error, warning and rotating speed achieved. There signals are MOSS Relay Contact Connections. The output current can be connected to either Sink or Source.
Voltage and Current Specifications

- Applied Voltage (V max) ≦ 30VDC
- Working Current (Ip) ≦ 100mA

Use an external power source for output circuits.
It is recommended to use the same 24VDC power source used for input signals. Please refer to Fig. 29 for connections.

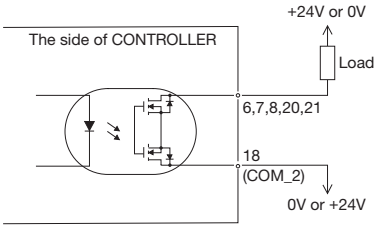

Fig. 29

(3) Output Signal Ⅱ

Refer to Fig. 30 for about the Output Signal of Rotating Pulse. The output current can be connected to either Sink or Source.
Voltage and Current Specifications

- Applied Voltage (V max) ≦ 30VDC
- Working Current (Ip) ≦ 50mA

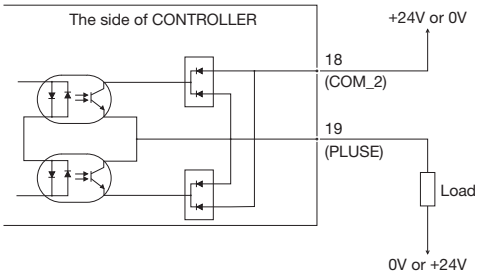

Fig. 30

(4) Motor Speed Control Signal

Refer to Fig. 31, 32, 33 for connections.

∗When applying the voltage, never input over 10VDC. This will avoid damaging to the CONTROLLER.

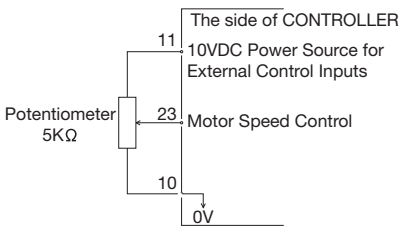

Fig. 31

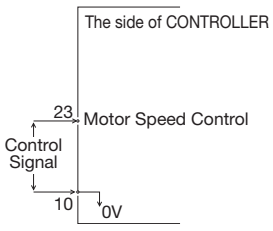

Fig. 32

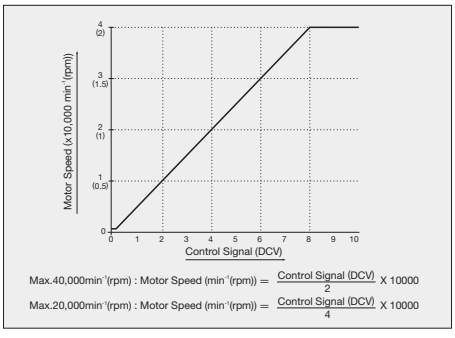

Fig. 33

(5) Monitoring Signals

There are 3 separate monitoring signals : Motor Current, Torque Load Monitor and Rotating Speed Monitor. Please refer to Fig. 34 for connections. Output Voltage is 0-10V.

- Motor Current Monitor
- Torque Load Monitor
- Rotating Speed Monitor Voltage

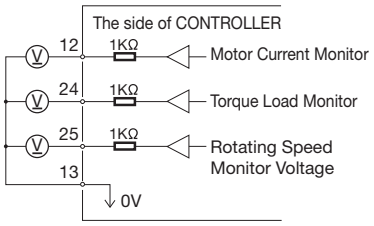

Fig. 34

(2) Connector B

If you use the SAFETY RELAY BOX (E4000-SRB) connected to a machine tool, connect the signal line of SAFE-1A, SAFE-1B, SAFE-2A, SAFE-2B to the safety circuit on the machine control side in order to build a safety shutdown system with higher reliability.

① Input / Output Connector B

⚠ Caution

NE246 does not use PIN No. 1, 3, 4, 9, 11, 12.
When putting the Safety Relay box (optional) in NE246, PIN No. 1, 3, 4, 9, 11, 12 can be used.

Pin No.	Pin Name	Description	Input/Output	Signal	Function
1	EMGIN-A	Emergency Stop Signal	Input	External Power Source input for Emergency Stop Signal or Emergency Stop Signal OFF (Open)	External Power Source input for Emergency Stop Signal or Emergency Stop Signal. Normal Operation ON (Closed), Emergency OFF (Open).
2	MTCN-A	Motor Signal Connect Contact A	Output	Continuity, OFF (Open), between PIN2 and PIN10 the motor is connected.	When there is continuity, OFF, between PIN2 and PIN10 the selected motor is connected, if no continuity the motor is disconnected or the motor cord is broken.
3	SAFE-1A	Relay Contact 1A	Output	PIN3 and PIN11 continuity ON (Closed) Relay is OFF	When there is continuity between PIN3 and PIN11 ON (Closed) Safety Relay is OFF (System Stopped), no continuity Safety Relay is OFF (Open) Normal Operation.
4	SAFE-2A	Relay Contact 2A	Output	PIN4 and PIN12 continuity ON (Closed) Relay is OFF	When there is continuity between PIN4 and PIN12 ON (Closed) Safety Relay is OFF (System Stopped), no continuity Safety Relay is OFF (Open) Normal Operation.
5	AUTO-A	AUTO Mode Signal (+)	Output	Auto Mode Operation PIN5 and PIN13 ON (Closed)	When AUTO Mode is being used this PIN5 & PIN13 is ON (Closed).
6	PWON-A	CONTROLLER Power Source Monitor (+)	Output	ON (Closed) : Main Power Supply is connected OFF (Open) : Main Power Supply is disconnected	If the main power supply to the CONTROLLER is connected this output is ON (Closed).
7	—	Not Used	—	—	—
8	—	Not Used	—	—	—
9	EMGIN-B	Emergency Stop Signal (-)	Input	External Power Source input for Emergency Stop Signal or Emergency Stop Signal OFF (Open)	External Power Source input for Emergency Stop Signal or Emergency Stop Signal. Normal Operation ON (Closed), Emergency OFF (Open).
10	MTCN-B	Motor Signal Connect Contact B	Output	Continuity, OFF (Open), between PIN2 and PIN10 the motor is connected.	When there is continuity, OFF, between PIN2 and PIN10 the selected motor is connected, if no continuity the motor is disconnected or the motor cord is broken.
11	SAFE-1B	Relay Contact 1B	Output	PIN3 and PIN11 continuity ON (Closed) Relay is OFF	When there is continuity between PIN3 and PIN11 ON (Closed) Safety Relay is OFF (System Stopped), no continuity Safety Relay is OFF (Open) Normal Operation.
12	SAFE-2B	Relay Contact 2B	Output	PIN4 and PIN12 continuity ON (Closed) Relay is OFF	When there is continuity between PIN4 and PIN12 ON (Closed) Safety Relay is OFF (System Stopped), no continuity Safety Relay is OFF (Open) Normal Operation.
13	AUTO-B	AUTO Mode Signal (-)	Output	Auto Mode Operation ON (Closed)	When AUTO Mode is being used this Pin is ON (Closed).
14	PWON-B	CONTROLLER Power Source Monitor (-)	Output	ON (Closed) : Main Power Supply is connected OFF (Open) : Main Power Supply is disconnected	If the main power supply to the CONTROLLER is connected this output is ON (Closed).
15	—	Not Used	—	—	—

⚠ Caution

When connecting unused PIN 7, 8, and 15, this may cause damage to the product.

②Input / Output Signals

(1) Output Signal

PIN No. 2-10, 5-13, 6-14

There are 3 separate output signals : “Motor Connection Monitoring”, “AUTO MODE” and “CONTROLLER Power Source Monitoring”.

These signals are MOS Relay Contact Connections. The output current can be connected to either Sink or Source.

Voltage and Current Specifications

- Applied Voltage (V max) ≦ 30VDC
- Working Current (Ip) ≦ 100mA

Use an external power source for output circuits. It is recommended to use a separate power from the one used for Input/Output Connector A. Please refer to Fig. 35 for connections.

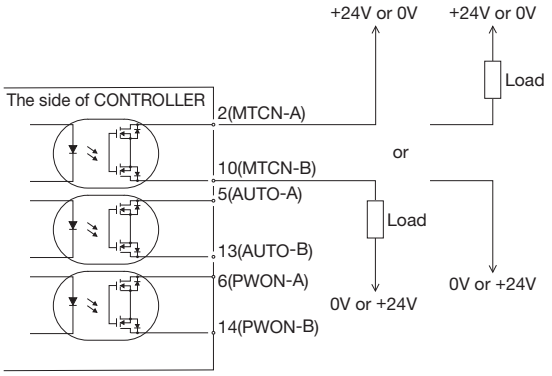

Fig. 35

(2) Emergency Stop Signal Input

PIN No. 1-9

This signal is a switched 24V DC output. Please use a separate power source that is capable of supplying 24VDC±10%, 50mA. Refer to Fig. 36 below for connections. Normal Operation circuit is ON (Closed) Emergency Stop circuit is OFF (Open). When emergency stop signal is turned OFF (Open), the relay in the safety relay BOX is turned OFF and the motor power line is opened, then the motor stops.

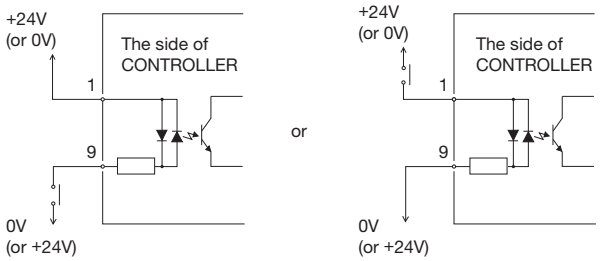

Fig. 36

(3) Relay Signal

PIN No. 3-11, 4-12

- The Relay will be ON or OFF depending on the state of the Emergency Stop Signal PIN1-9.
- When there is continuity between PIN3 (SAFE-1A) and PIN11 (SAFE-1B) or between PIN4 (SAFE-2A) and PIN12 (SAFE-2B) the motor is off. If there is no continuity between these pairs of pins then the system is operating normally.
- If the Emergency Stop Signal is OFF (Open) the Relay will be OFF (Open) and the motor power will be interrupted and the motor will stop.
- The voltage/current specifications of PIN3-11 & PIN4-12.

  Applied Voltage (V max) ≦ 30VDC
  Working Current (Ip) ≦ 2A

• Refer to Fig. 37 for connecting relationship between the relay contact output and the safety BOX.

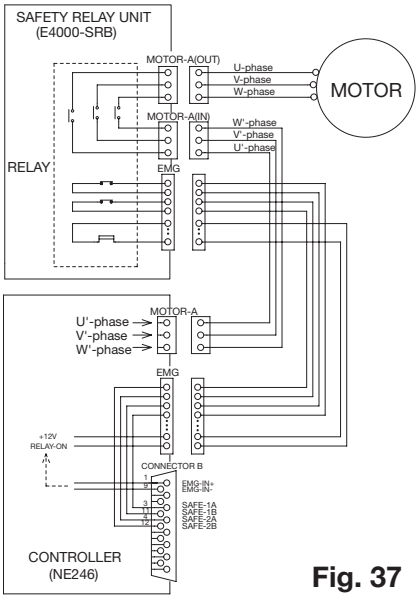

Fig. 37

(3) Input / Output Signal Connector Specifications

① Input / Output Connector A

Plug Part Number : XM2A-2501 OMRON (or other similar high-quality product)
Cover Part Number : XM2S-2511 OMRON (or other similar high-quality product)

② Input / Output Connector B

Plug Part Number : XM2A-1501 OMRON (or other similar high-quality product)
Cover Part Number : XM2S-1511 OMRON (or other similar high-quality product)

- The Plug and Cover are not provided with the system. Please purchase the specified plug and cover from local suppliers.
- Use only shielded cables to minimize RF interference and noise. Connect the shield to the plug cover.
- Different makers use different names for the cover.

⚠ Caution

To minimize RF interference and noise please keep the length of the cables as short as practical and route separate from power cables.

(4) Input / Output Connector A, B Pin Configuration



Connector A Connector B

Fig. 38

iSpeed3
External Input / Output Control Signal Specifications (7-p24~p29)

(1) Connector A

① Input / Output Connector A

Pin No.	Pin Name	Description	Input/Output	Signal	Function
1	COM_1	External Power Source for External Inputs	Input	0V or +24V DC	Power Source to be used for External Inputs Signals.
2	DIR_IN	Rotating Direction Signal	Input	OFF (Open) : FWD. ON (Closed) : REV.	Controls the direction on rotation of the motor.
3	CNT_IN	Speed Change Pulse Signals	Input	OFF (Open) → ON (Closed)	Speed of one pulse 100rpm can be change in Speed mode of pulse signal. (Parameter P5)
4	RESET	Error Release Signal	Input	ON (Closed) → OFF (Open)	Error code can be released and the system restarted by switching this signal OFF and ON.
5	SEL1	Speed Section Signal	Input	OFF (Open) ON (Closed)	Select motor speed by using SEL0 and SEL1. (Parameter P5)
6	RUN	Rotating Signal	Output	ON (Open) : Rotating OFF (Closed) : Stopped	Output shows that the motor is rotating.
7	DIR_OUT	Rotating Direction Signal	Output	OFF (Open) : FWD. ON (Closed) : REV.	Output shows the direction of the motor is rotating.
8	ERR	Error Signal	Output	OFF (Open) : Normal ON (Closed) : Error	Error has occurred. (Parameter P1)
9	MT_SEL	Motor Select Signal	Input	OFF (Open) : Motor No.1 ON (Closed) : Motor No.2	Select the motor to be used.
10	SEL_MT	Selected Motor Signal	Output	OFF (Open) : Motor No.1 ON (Closed) : Motor No.2	Output shows the selected motor No.
11	VCC	Internal Power Source for Analog Signal	Output	+10V DC	Power Source for VR 1 and VR 2.
12	MOTOR_1	Motor Current Monitor	Output	0-10V DC 1.0A/V	Output shows the motor current consumption. Output voltage is proportional to the motor current consumption.
13	GND	Internal Ground	Output	Internal GND	This GND to be used for analog output circuit.
14	START	Rotate Command Signal	Input	OFF (Open) : Stop ON (Closed) : Rotation	Starts and Stops motor rotation.
15	UD_IN	Pulse Speed Change UP/DOWN Signal	Input	OFF (Open) : Speed Down ON (Closed) : Speed Up	Determine speed up or speed down. (Parameter P5)
16	–	Not Used	–	–	–
17	SEL0	Speed Change Point Select Signal "0"	Input	OFF (Open) ON (Closed)	Select 4 motor speeds by using SEL0 and SEL1. (Parameter P5)
18	COM_2	External Power source for External Output	Input	0V or +24V DC	Power Source to be used for External output signals.
19	PULSE	Rotating Pulse	Output	1 Pulse/Rotation	1 revolution of the motor generates one pulse. Duty 50%
20	WARNING	Warning Signal	Output	OFF (Open) : Normal Operation ON (Closed) : Warning	Shows a Warning has Occurred. The Warning Code is shown on the Digital Speed Indicator.
21	COIN	Speed Achievement Signal	Output	OFF (Open) : Ordered Speed not achieved ON (Closed) : Ordered Speed achieved	Shows that the motor has achieved more than 90% of the set Speed. (Parameter P9)
22	VR2	Motor No.2 Speed Control Signal	Input	Motor No. 2 Speed Control Signal	Sets rotating speed of motor No.2. 10,000rpm /V. (Based on 80,000rpm Max.)
23	VR1	Motor No.1 Speed Control Signal	Input	Motor No. 1 Speed Control Signal	Sets rotating speed of motor No.1. 10,000rpm /V. (Based on 80,000rpm Max.)
24	LOAD	Torque Load Monitor	Output	0-10V DC 20%/V	Shows that the torque being applied to the motor. 20%/V 100%(rating)/5V
25	SPEED_V	Rotating Speed Monitor Voltage	Output	10,000 rpm/V	Voltage Output is proportional to the motor speed.

Table 1 Speed point can be set with parameter P5

Speed Point	SEL0 (Pin No. 5)	SEL1 (Pin No. 17)
U 1	OFF (Open)	OFF (Open)
U 2	OFF (Open)	ON (Closed)
U 3	ON (Closed)	OFF (Open)
U 4	ON (Closed)	ON (Closed)

② Input / Output Diagram

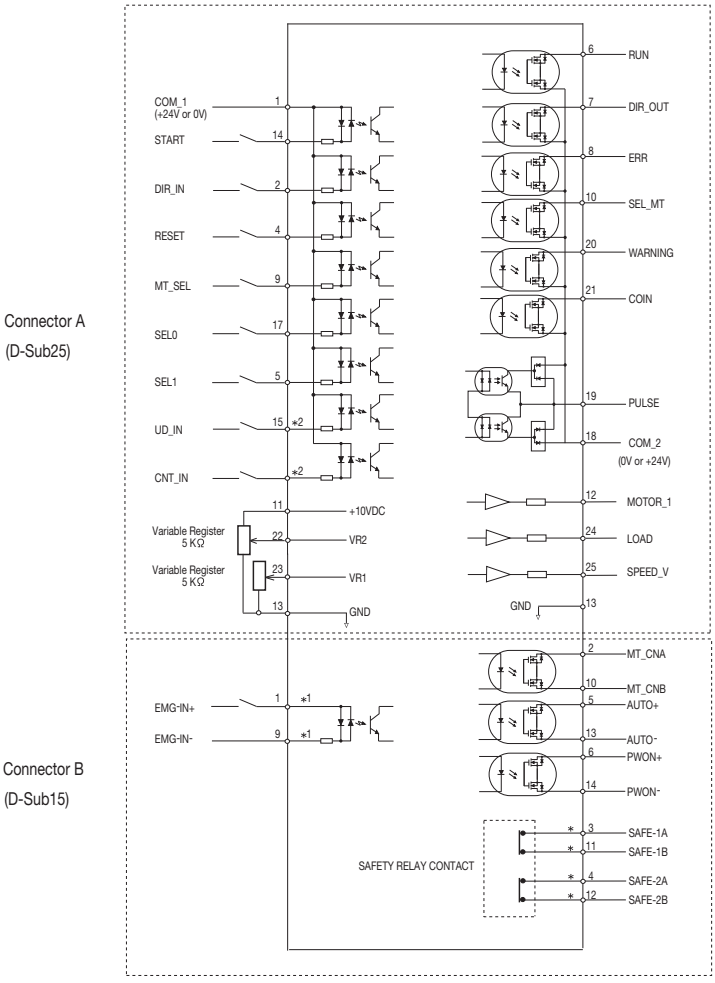

*1 : By setting parameter P8, EMG-IN signal can be used.

*2 : By setting parameter P5, Motor Speed change is possible by pulse signals.

Fig. 26

③ Input / Output Signals

(1) Input Signal

There are 8 separate input signals : Rotation Command, Rotation Direction, Error Release, Speed Up or Down Signal, Speed Command Pulse Signal, Motor Selection Signal, Speed Point for Motor No.1 / Motor No.2.

These signals are +24VDC signals from an external signal source.

Please use a separate power source that is capable of supplying 24VDC±10 %, 100mA (max). Refer to Figures below for connections.

*By setting parameter P5, Motor Speed Change possible by Pulse Signal. If input "Speed Up or Down Signal (UD-IN)" "Speed Command Pulse Signal (CNT-IN)".

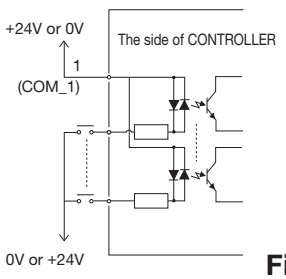

Fig. 27

(2) Output Signal Ⅰ

There are 6 separate output signals : Rotating, Rotating Direction, Error, Warning, Selected Motor, Rotating Speed Achieved. There signals are MOS Relay Connections. The output signal can be connected to either a sinking or source type connection.
Voltage and Current Specifications

- Applied Voltage (V max) ≦ 30VDC
- Working Current (Ip) ≦ 100mA

Use a separate external power source for output circuits. It is recommended to use a separate 24VDC power source other than the one used for input signals. Please refer to Fig. 28 for connections.

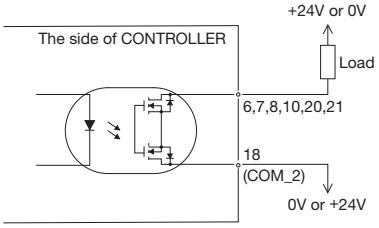

Fig. 28

(3) Output Signal Ⅱ

Refer to Fig. 29 for about the Output Signal of Rotating Pulse. This signal is A photo coupler connection. This output can be connected to either a sinking or source type connection.
Voltage and Current Specifications

- Applied Voltage (V max) ≦ 30VDC
- Working Current (Ip) ≦ 100mA

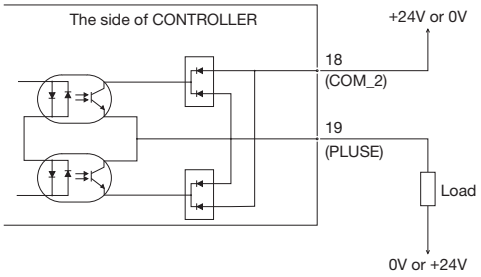

Fig. 29

(4) Motor Speed Control Signal

Refer to Fig. 30, 31, 32 for connections.

When applying the voltage, never input over 10VDC. This will avoid damaging to the CONTROLLER. (Fig. 31)

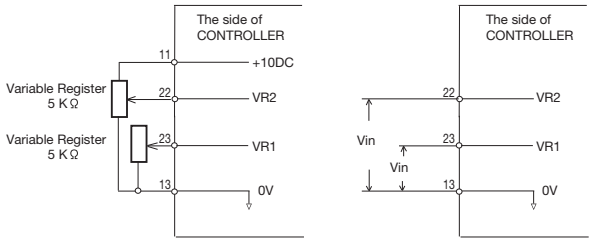

Fig. 30

Vin:Speed Control Signal
Vin must be less than 10VDC

Fig. 31

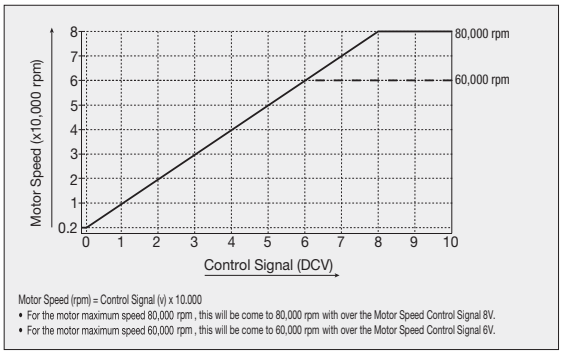

Fig. 32

(5) Monitoring Signals

There are 3 separate monitoring signals : Motor Current, Torque Load Monitor and Rotating Speed Monitor. Please refer to Fig. 33 for connections.

- Motor Current Monitor
- Torque Load Monitor
- Rotating Speed Monitor Voltage

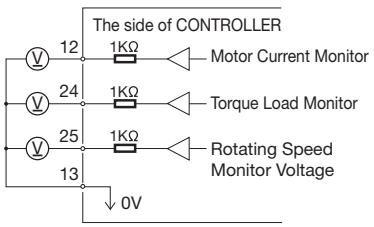

Fig. 33

(2) Connector B

① Input / Output Connector B

⚠ Caution

Connector B does not use PIN No. 7, 8 and 15.

Pin No.	Pin Name	Description	Input/Output	Signal	Function
1	EMGIN-A	Emergency Stop Signal A	Input	Input for Emergency Stop signal.	Emergency Stop Signal. Normal Operation On (Closed). EMERGENCY off (Open).
2	MTCN-A	Motor Signal Contact Connector A	Output	Continuity OFF (Open) between MTCN-A and MTCN-B the motor is connected.	When there is continuity, (OFF), between MTCN-A and MTCN-B the motor is connected. If no continuity the motor is disconnected.
3	SAFE-1A	Relay Contact 1A	Output	SAFE-1A and SAFE-1B continuity ON (Closed) Relay is OFF.	When there is continuity, (OFF), between SAFE-1A and SAFE-1B ON (Closed) Safety Relay is OFF (Emergency Stop), no continuity Safety Relay is OFF (Open) Normal Operation.
4	SAFE-2A	Relay Contact 2A	Output	SAFE-2A and SAFE-2B continuity ON (Closed) Relay is OFF.	When there is continuity, (OFF), between SAFE-2A and SAFE-2B ON (Closed) Safety Relay is OFF (Emergency Stop) no, continuity Safety Relay is OFF (Open) Normal Operation.
5	AUTO-A	AUTO Mode Signal A	Output	AUTO Mode Operation ON (Closed).	When AUTO Mode is being used, AUTO-A and AUTO-B is ON (Closed)
6	PWON-A	CONTROLLER Power Source Monitor A	Output	ON (Closed) :Main Power Supply is connected. OFF (Open) : Main Power Supply is disconnected.	If the main power supply to the CONTROLLER is connected, PWON-A and PWON-B is ON (Closed)
7	—	Not Used	—	—	—
8	—	Not Used	—	—	—
9	EMGIN-B	Emergency Stop Signal B	Input	Input for Emergency Stop signal.	Emergency Stop Signal Normal Operation ON (Closed), Emergency OFF (Open)
10	MTCN-B	Motor Signal Connect Contact B	Output	Continuity OFF (Open) between MTCN-A and MTCN-B the Motor is connected.	When there is continuity, OFF, between MTCN-A and MTCN-B the motor is connected. If no continuity the motor is disconnected.
11	SAFE-1B	Relay contact 1B	Output	SAFE-1A and SAFE-1B continuity ON (Closed) Relay is OFF.	When there is continuity, OFF, between SAFE-1A and SAFE-1B ON (Closed) Safety Relay is OFF (Emergency Stop), no continuity Safety Relay is OFF (Open) Normal Operation.
12	SAFE-2B	Relay Contact 2B	Output	SAFE-2A and SAFE-2B continuity ON (Closed) Relay is OFF.	When there is continuity, OFF, between SAFE-2A and SAFE-2B ON (Closed) Safety Relay is OFF (Emergency Stop), no continuity Safety Relay is OFF (Open) Normal Operation.
13	AUTO-B	AUTO Mode Signal B	Output	Auto Mode Operation ON (Closed)	When AUTO Mode is being used, AUTO-A and AUTO-B is ON (Closed)
14	PWON-B	CONTROLLER Power Source Monitor B	Output	ON (Closed) :Main Power Supply is connected. OFF (Open) : Main Power Supply is disconnected.	If the Main power supply to the CONTROLLER is connected, PWON-A and PWON-B is ON (Closed).
15	—	Not Used	—	—	—

⚠ Caution

If unused Pins 7, 8 or 15 are connected, the CONTROLLER will be damaged.

②Input / Output Signals

(1) Output Signal

PIN No. 2-10, 5-13, 6-14

There are 3 separate output signals : “Motor Connection Monitoring”, “AUTO MODE” and “CONTROLLER Power Source Monitoring”.

These signals are MOS Relay Contact Connections. The output signal can be connected to either Sink or Source.

Voltage and Current Specifications

- Applied Voltage (V max) ≦ 30VDC
- Working Current (Ip) ≦ 100mA

Use an external power source for output circuits. It is recommended to use a separate power from the one used for Input/Output Connector A. Please refer to Fig. 34 for connections.

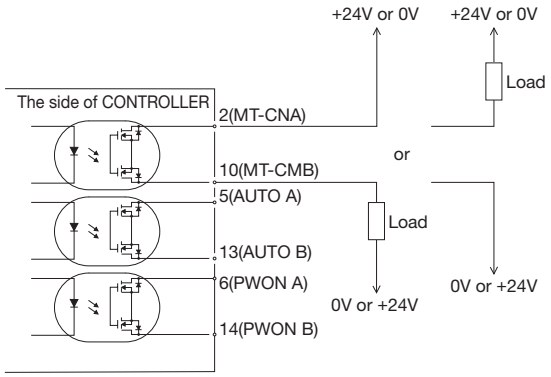

Fig. 34

(2) Emergency Stop Signal Input

PIN No. 1-9

This signal is a +24V DC signal for External signal source.

Please use a separate power source that is capable of supplying 24VDC ±10%, 50mA. Refer to Fig. 35 below for connections.

When Normal Operation circuit is ON (Closed), the safety relay is on.

When the Emergency Stop Signal is OFF (Open) the Safety Relay is OFF and the power supply to the motor is interrupted and the motor stops.

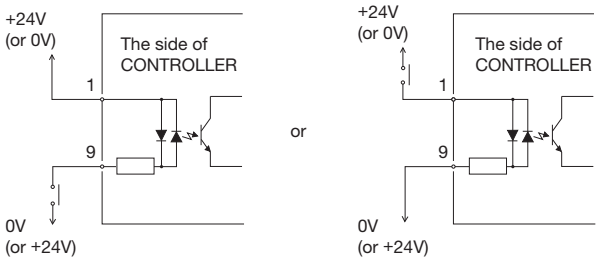

Fig. 35

(3) Safety Relay Contact Signal

PIN No. 3-11, 4-12

- The Safety Relay will be ON or OFF depending on the state of the Emergency Stop Signal PINS 1and 9.
- When there is continuity between PIN3 (SAFE-1A) and PIN11 (SAFE-1B) or between PIN4 (SAFE-2A) and PIN12 (SAFE-2B) the motor is off. If there is no continuity between these pairs of pins then the system is operating normally.
- If the Emergency Stop Signal is OFF (Open) the Safety Relay will be OFF and the motor power will be interrupted and the motor will stop.

- The voltage/current specifications of PIN3-11 and PIN4-12.
  - Applied Voltage (V max) ≦ 30VDC
  - Working Current (Ip) ≦ 2A

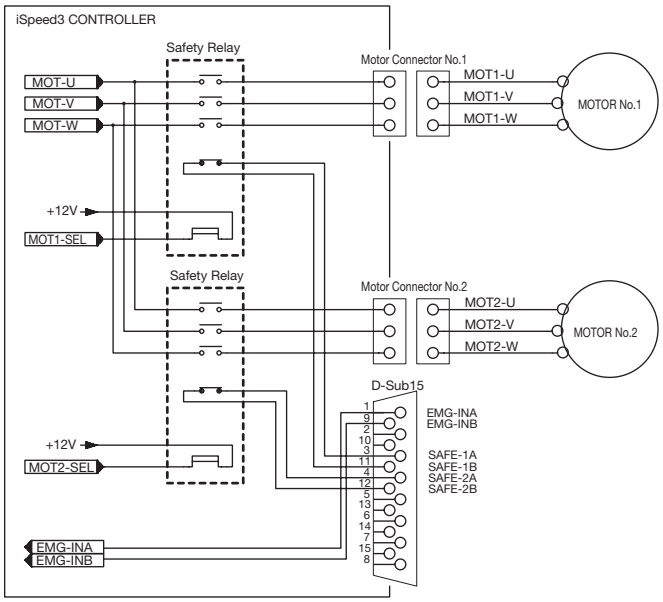

Fig. 36

(3) Input / Output Signal Connector Specifications

① **Input / Output Connector A**

Plug Part Number : XM2A-2501 OMRON (or other similar high-quality product)
Cover Part Number : XM2S-2511 OMRON (or other similar high-quality product)

② **Input / Output Connector B**

Plug Part Number : XM2A-1501 OMRON (or other similar high-quality product)
Cover Part Number : XM2S-1511 OMRON (or other similar high-quality product)

- The Plug and Cover are not provided with the system. Please purchase the specified plug and cover from local suppliers.
- Use only shielded cables to minimize RF interference and noise. Connect the shield to the connector cover.
- Different makers use different names for the cover.

⚠ Caution

To minimize RF interference and noise please keep the length of the cables as short as possible and route separate from high voltage electrical cables.

(4) Input / Output Connector A, B Pin Configuration

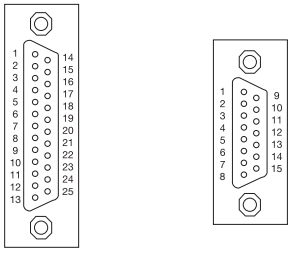

Connector A Connector B

Fig. 37

15. EXTERNAL INPUT / OUTPUT CONNECTOR

15 - 1 External Input / Output Connector A

(1) Details of External Input / Output Connector A Signals

WARNING

- **DO NOT connect any circuit other than SELV (DC+24) (Safety Extra Low Voltage) to the External Input / Output Connector A of the CONTROLLER. This will cause I / O board damage in the CONTROLLER.**
- **Do not supply over voltage or over current into the input / output circuit. Always install a LOAD (resistor) to the output circuit to eliminate the chance of damage to the CONTROLLER.**

CAUTION

- **External Input / Output Connector A DOES NOT use Pins No. 10, No. 16, No. 20 and No. 22. If Pins No. 10, No. 16 and No. 20 are connected, the CONTROLLER will be damage.**
- **NEVER Connect the pin No.1（COM_1) or No.18（COM_2）to the No.13 (GND).**

Table 15.

Pin No.	Code	Function	Input / Output	Description	
1	COM_1	External Power source for External input	Input	DC0V or DC+24V	Power source to be used for External Inputs Signals.
2	DIR_IN	Rotating Direction Setting	Input	OFF (Open) : FWD. ON (Closed) : REV.	Controls the rotational direction of the motor spindle. Setting parameter P6, can start with reverse rotation. (Refer to P100 " 17 - 4 ⑥ P6 Selection of External Motor Start Signal Control Mode " section.）
3	CNT_IN	Count Pulse Signal for Setting Motor Speed	Input	OFF (Open) → ON (Closed)	One pulse will increase or decrease 100min^{-1} in Spindle Speed depending on parameter P5 setting. (Refer to P99 " 17 - 4 ⑤ P5 Selection of External Speed Control Mode" section.) The increase speed and decrease speed are set by UD_IN.
4	RESET	Error Release	Input	ON (Closed) → OFF (Open)	Error Code can be released and the system restarted by toggling this signal OFF and ON. Error will not be released until cause of the error has been removed.

Pin No.	Code	Function	Input / Output	Description	
5	SEL1	Speed Point Select 1	Input	Refer to P78 " 14 - 3 - 2 (4) ③ Set by the Speed Point Signal Table14 ".	Speed Point (U1 – U4) can be selected by SEL0 and SEL1 signal combination. Need to set parameter P5. (Refer to P99 " 17 - 4 ⑤ P5 Selection of External Speed Control Mode " section.)
6	RUN	Rotating	Output	OFF (Open) : Stop ON (Closed) : Rotating	Output shows that the motor is rotating.
7	DIR_OUT	Rotating Direction	Output	OFF (Open) : FWD. ON (Closed) : REV.	Output shows the direction of the Motor is rotating.
8	ERR	Error	Output	OFF (Open) : Error ON (Closed) : Normal	Output shows that error has occurred. Error code will be displayed on Digital Speed Indicator. When setting parameter P1, Error Output Mode can be changed. (Refer to P97 " 17 - 4 ① P1 Setting of Error Output Mode " section.)
9	ID0	Motor Class Signal 0	Input	Refer to P77 "14 - 3 - 2 (3)Setting the Motor Class Signal ".	Select the Motor Class by using both ID0 and ID1 signals.
10	Not Used	—	—	—	*Note : Never use pin labeled not used.
11	Vcc	Internal Power Source for Motor Speed Control Voltage	Output	DC+10V	Internal Power Source for " Motor Speed Control Voltage (VR) ".
12	MOTOR_I	Motor Current Monitor	Output	2Amp / V DC0V - DC+10V	Output Motor Current Monitor with Analog Monitor Voltage. 2Amp / 1V. Max. 20Amp.
13	GND	Internal GND for Analog Monitor and Motor Speed Control Voltage ONLY	Output	Internal CONTROLLER GND	This GND will be used for analog monitor and Motor Speed Control Voltage (MOTOR_I, SPEED_V, and LOAD).
14	START	Rotate ommand	Input	OFF (Open) : Stop ON (Closed) : Start	Motor Start and Motor Stop Signal Setting parameter P6, can start with forward rotation. (Refer to P100 " 17 - 4 ⑥ P6 Selection of External Motor Start Signal Control Mode" section.)

Pin No.	Code	Function	Input / Output	Description	
15	UD_IN	UP / DOWN Signal for Setting Motor Speed	Input	OFF (Open) : Speed Down ON (Closed) : Speed Up	This signal is for increasing and decreasing the desired speed by the use of a Pulse Signal. Whether it increases or decreases speed is determined by CNT_IN. It is requred that parameter P5 is set. (Refer to P99 " 17 - 4 ⑤ P5 Selection of External Speed Control Mode " section.)
16	Not Used	—	—	—	*Note : Never use pin labeled not used.
17	SEL0	Speed Point Select 0	Input	Refer to P78 " 14 - 3 - 2 (4) ③ Set by the Speed Point Signal Table14 ".	Speed Point (U1 – U4) can be selected by SEL0 and SEL1 signal combination. Need to set parameter P5. (Refer to P99 " 17 - 4 ⑤ P5 Selection of External Speed Control Mode " section.)
18	COM_2	External Power Source for External Output	Input	DC0V or DC+24V	Power source to be used for External Outputs Signals.
19	PULSE	Rotating Pulse	Output	1 pulse / rotation	1 revolution of the motor generates one pulse. Duty 50%.
16	Not Used	—	—	—	*Note : Never use pin labeled not used.
21	COIN	Speed Achievement	Output	OFF (Open) : Set speed not achieved ON (Closed) : Set speed achieved	Shows that the Motor has achieved more than 90% of the set speed. (The Speed Achievement amount can change by parameter P9.)
22	ID1	Motor Class Signal 1	Input	Refer to P77 "14 - 3 - 2 (3) Setting the Motor Class Signal	Select the Motor Class by using both ID0 and ID1 signals.
23	VR	Motor Speed Control Voltage	Input	Speed (min^{-1}) = Speed Control Voltage Signal × 10000 DC 0 - DC+10V	Sets rotating speed of the motor. Refer to Fig. 46 about relationship between motor speed and control signal.
24	LOAD	Torque Load Monitor	Output	Torque Load Monitor (%) = Torque Load Monitor Voltage × 20	Shows that the torque being applied to the motor. 20%/ V 100% (rating) / 5V Torque Load Monitor : 0 - 200% (DC0V - DC+10V)
25	SPEED_V	Rotating Speed	Output	10,000min^{-1} / V	Output the rotation speed of rotating motor with Analog Monitor Voltage. 10,000min^{-1} / V DC0V - DC+10V

(2) Input / Output Diagram

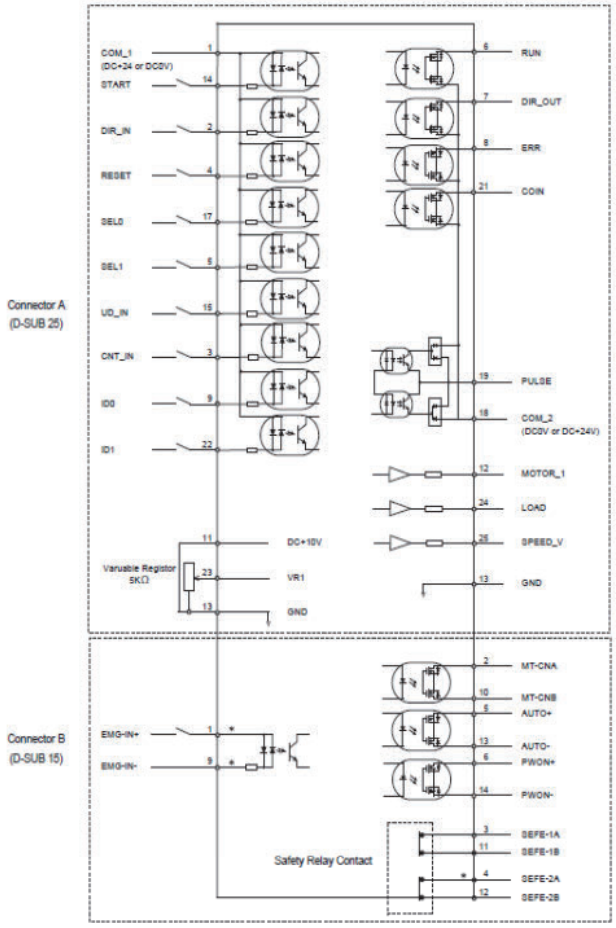

Fig. 40

*1 When using the "EMG - IN" Signal, set parameter P8. (Refer to P101 “17 - 4 ⑧ P8 Selection of Emergency Stop Function” sectional.)

*2 When using the "UD_IN and CNT_IN" Signal, set parameter P5. (Refer to P99 “17 - 4 ⑤ P5 Selection of External Speed Control Mode” section.

(3) Input / Output Signal

① There are 9 different input signals : “Rotate Command (START)”, “Rotating Direction Setting (DIR_IN)”, “Error Release (RESET)”, Speed Up or Down Signal, Speed Command Pulse Signal, Motor Class Selection Signal, “UP / DOWN Signal for Setting Motor Speed (UD_IN)”, “Count Pulse Signal for Setting Motor Speed (CNT_IN)”, “Motor Class Slelection Signal '0' and '1' ” and “Speed Point Selection Signal '0' and '1' ".

Refer to Fig. 41 for connections.

▪Please use a separate power source that is Capable of supplying 24VDC±10%, 100mA .

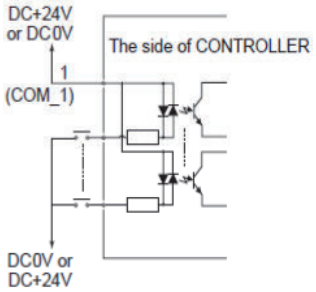

Fig. 41

② Output Signal Ⅰ

There are 4 kinds of output signals : “Rotating (RUN)”, “Rotating Direction (DIR_OUT)”, “Error (ERR)”, and “Speed Achievement (COIN)”. These signals are MOSS Relay Contact Connections. The output current can be connected to either sinking or sourcing.

Voltage and Current Specifications

▪Applied Voltage (V) ≦ 30V DC

▪Working Current (Ip) ≦ 100mA

Use an external power source for output circuits. It is recommended to use the same 24VDC power source used for input signals. Please refer to Fig. 42 for connections.

CAUTION

Never supply more that 100mA of current to the input / output circuit. It is recommended to add a LOAD (resistor) to the output circuit. Over Current Will Cause Damage To The CONTROLLER.

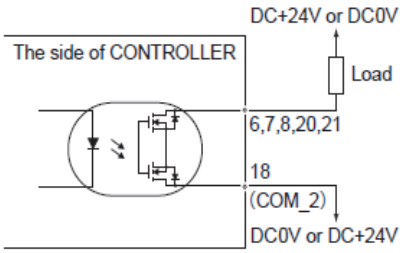

Fig. 42

③ Output Signal Ⅱ

Refer to Fig. 43 regarding the Output Signal of the “Rotating Pulse (Pulse)”.
The output signal can be connected for either sinking or sourcing.
Voltage and Current Specifications
・Applied Voltage (V) ≦ 30V DC
・Working Current (Ip) ≦ 50mA

CAUTION

Do not send excess current into the input / output circuit. Verify the working-current will is less than 50mA after connected the LOAD (resistor) of the output circuit. EXCESS CURRENT WILL CAUSE DAMAGE TO THE CONTROLLER.

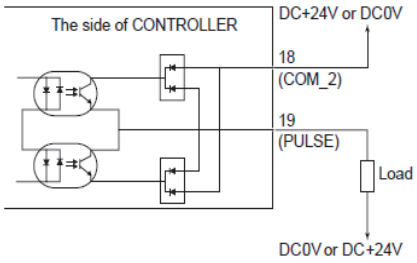

Fig. 43

④ Motor Speed Control Signal

Rotation Speed can be selected by, applying analog voltage to the " Motor Speed Control Voltage (VR)". Refer to Fig. 44, 45 for connections. Refer to Fig. 46 for the relationship between Motor Speed and Control Signal.

CAUTION

When applying the DC0V to DC+10V, never input more than DC+10V (Fig. 45). This will cause serious damage to the I / O Board in the CONTROLLER.

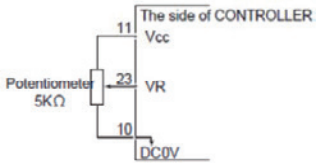

Fig. 44

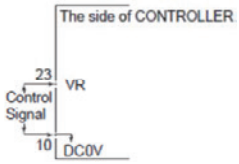

Fig. 45

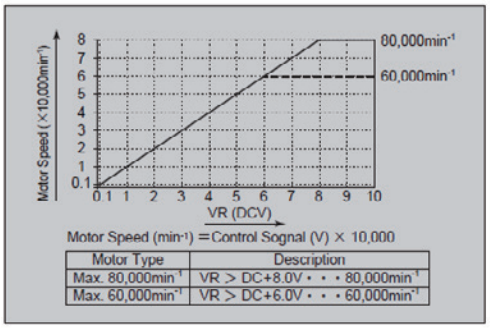

Fig. 46

⑤ Analog Monitor Signals

There are 3 types of monitoring signals : “Motor Current Monitor (MOTOR_I)”, “Torque Load Monitor (LOAD)”, and “Rotating Speed Analog Monitor Voltage (SPEED_V)”. Please refer to Fig. 47 for connections.

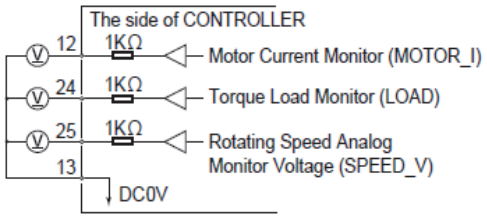

Fig. 47

1
EmaxEVO
ESPERT
ROTUS
IMPULSE
PRESTO II
Sheenus ZERO
2
iSpeed3
E2000 ø1.0"/ø0.98"/ø0.897"
E3000 – One Piece
E3000 – Modular
ø1.18"
ø1.0"/ø0.98" ø0.897"
E3000 – 80,000rpm
E4000
3
MA
ø0.897"
ø1.0" ø0.98"
ø1.18"
MS
ø0.75" ø0.79"
ø0.87" ø0.91"
ø1.0" ø0.98"
4
HES
iSpeed5
HTS
HPS
PLANET
Xpeed
ABT
5
AIR LINE KIT
6
PARTS
7
TECHNICAL DATA
8
APPLICATION EXAMPLES
INDEX

15 - 2 External Input / Output Connector B

(1) Details of External Input / Output Connector B Signals

WARNING

- **DO NOT CONNECT any circuit other than SELV (DC+24V) (Safety Extra Low Voltage) to the External Input / Output Connector B of the CONTROLLER, this will cause I / O board damage in the CONTROLLER.**
- **Do not supply over voltage or over current into the input / output circuit. Always install a LOAD (resistor) to the output circuit to eliminate the chance of damage to the CONTROLLER.**

CAUTION

- **Input / Output Connector B DOES NOT use Pins No. 7, No. 8 and No. 15. If Pins No. 7, No. 8 and No. 15 are connected, the CONTROLLER will be damage.**

Table 16.

Pin No.	Code	Function	Input / Output	Description	
1	EMG-INA	Emergency Stop A	Input	External Power Source input for Emergency Stop Signal or Emergency Stop Signal OFF (Open)	External Power Source input for Emergency Stop Signal or Emergency Stop Signal. Normal Operation ON (Closed), Emergency OFF (Open). When using the Emergency Stop Signal, set parameter P8. (Refer to P101 " 17 – 4 ⑧ P8 Selection of Emergency Stop Function " section.)
2	MT-CNA	Motor Connect Contact A	Output	Continuity, OFF (Open), between Pin No. 2 and Pin No. 10 the motor is connected.	When there is continuity, OFF, between Pin No. 2 and Pin No. 10 and the selected motor is connected, if no continuity is present, the motor is disconnected or the motor cord is broken.
3	SAFE-1A	Safety Relay Contact 1A	Output	Pin No. 3 and Pin No. 11 continuity ON (Closed) Safety Relay is OFF	When there is continuity between Pin No. 3 and Pin No. 1 ON (Closed) Safety Relay is OFF (System Stopped), no continuity Safety Relay is OFF (Open) Normal Operation.
4	SAFE-2A	Safety Relay Contact 2A	Output	Pin No. 4 and Pin No. 12 continuity ON (Closed) Safety Relay is OFF	When there is continuity between Pin No. 4 and Pin No. 12 (ON / Closed), the Safety Relay is OFF (System Stopped), no continuity Safety Relay is OFF (Open) is Normal Operation.
5	AUTO +	Control Mode AUTO Signal (+)	Output	Control Mode AUTO Pin No. 5 and Pin No. 13 are ON (Closed)	When Control Mode AUTO is being used, this Pin No. 5 and Pin No. 13 are ON (Closed).

Pin No.	Code	Function	Input / Output	Description	
6	PWON +	CONTROLLER Power Source Monitor (+)	Output	ON (Closed) : Main Power Supply is connected OFF (Open) : Main Power Supply is disconnected.	If the Main Power Switch is ON, Pin No. 6 and Pin No. 14 are ON (Closed).
7	Not Used	—	—	—	*Note : Never use pin labeled not used.
8	Not Used	—	—	—	*Note : Never use pin labeled not used.
9	EMG-INB	Emergency Stop B	Input	External Power Source input for Emergency Stop Signal or Emergency Stop Signal OFF (Open)	Normal Operation ON (Closed), Emergency OFF (Open). When using the Emergency Stop Signal, set parameter P8. (Refer to P101 " 17 - 4 P8 ⑧ Selection of Emergency Stop Function" section.)
10	MT-CNB	Motor Connect Contact B	Output	Continuity, OFF (Open), between Pin No. 2 and Pin No. 10 the motor is connected.	When there is continuity between the contacts of Pin No. 2 and Pin No. 10 (OFF), the selected motor is connected, if no continuity the motor is disconnected or the motor cord is broken.
11	SAFE-1B	Safety Relay Contact 1B	Output	Pin No. 3 and Pin No. 11 continuity ON (Closed) Safety Relay is OFF	When there is continuity between Pin No. 3 and Pin No. 11 ON (Closed) Safety Relay is OFF (System Stopped). If there is no continuity Safety Relay is OFF (Open) for Normal Operation.
12	SAFE-2B	Safety Relay Contact 2B	Output	Pin No. 4 and Pin No. 12 continuity ON (Closed) Safety Relay is OFF	When there is continuity between Pin No. 4 and Pin No. 12 ON (Closed) the Safety Relay is OFF (System Stopped). If there is no continuity, Safety Relay is OFF (Open) Normal Operation.
13	AUTO -	Control Mode AUTO Signal (-)	Output	Control Mode AUTO Pin No. 5 and Pin No. 13 are ON (Closed)	When Control Mode AUTO is being used, Pin No. 5 and Pin No. 13 are ON (Closed).
14	PWON -	CONTROLLER Power Source Monitor (-)	Output	ON (Closed) : Main Power Supply is connected OFF (Open) : Main Power Supply is disconnected	IIf the Main Power Switch is ON, Pin No. 6 and Pin No. 14 are ON (Closed).
15	Not Used	—	—	—	*Note : Never use pin labeled not used.

③ Safety Relay Signal

CAUTION

If the Emergency Stop Function is not installed, the Emergency Stop Signal (EMG-IN) will not function. If enabling the Emergency Stop function, it is necessary to set parameter P8. (Refer to P101 " 17 - 4 ⑧ P8 Selection of Emergency Stop Function " section.)

Pin No. 3 - No. 11, No. 4 - No. 12

- The Safety Relay will be ON or OFF depending on the state of the Emergency Stop Signal pins No. 1 and No. 9.
- When there is continuity between pin No. 3 (SAFE-1A) and pin No. 11 (SAFE-1B) or between pin No. 4 (SAFE-2A) and pin No. 12 (SAFE-2B) the Motor is off. If there is no continuity between these pairs of pins then the system is operating normally.
- If the Emergency Stop Signal is OFF (Open) the Safety Relay will be OFF and the Motor Power will be interrupted and the Motor will stop.
- If the (NO) Normally Open contacts of the Safety Relay are welded together by an over load or short circuit the (NC) Normally Closed contacts separation are maintained with more than 0.5mm spacing by the relay's recoil mechanism.
- The installed Safety Relay is designated to comply with EN standards.
- If the (NO) Normally Open contacts of the Safety Relay are welded together by an over load or short circuit the (NC) Normally Closed contacts separation are maintained with more than 0.5mm spacing by the relay's recoil mechanism.
- The voltage / current specifications of Pin No. 3 - 11 and Pin No. 4 - 12.
  Applied Voltage (V) ≦ DC+30V
  Working Current (Ip) ≦ 2A
  Refer to Fig. 50 below for connections.

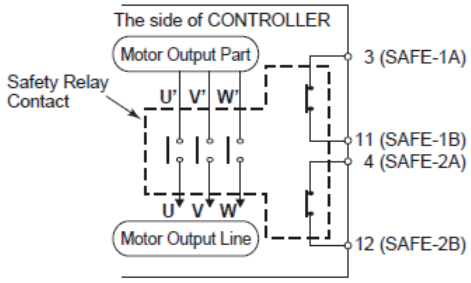

Fig. 50

* Safety Relay

- If an N - O contact becomes welded, all N - C contacts will maintain a minimum distance of 0.5 mm when the coil is not energized.
  N - O contacts (Normally - opened contacts) : Contacts of U - U' , V - V' , W - W' .
  N - C contacts (Normally - closed contacts) : Contacts of (SAFE - 1A) - (SAFE - 1B), (SAFE - 2A) - (SAFE-2B).

* Machine Safety Circuit is possible when using the Safety Relay Contacts Output

- When an Emergency Stop Signal input that is coupled to a door open switch of an Industrial Machine, the Safety Relay will energize and open the Motor Power Line circuit.
- Contact outputs ((SAFE - 1A) - (SAFE - 1B), (SAFE - 2A) - (SAFE - 2B)) of the N - C contacts can beused for detecting the opening of the Motor Power Line. If N - O contacts become welded, contact outputs will maintain an OFF condition Open), by Forced Guide Mechanism. Therefore, Safety Relay can be used as an open signal of a movable guard or operator door with a locking (switch) mechanism for Industrial Machinery.

MACHINE TOOL SPINDLES INFORMATION

Maximum Motor Speed for Angle Type Spindles / Speed Reducers.

● When using an angle type spindle or a speed reducer, do not exceed the maximum motor speed or the reducer.

Example : **90°Angle Spindle RA-100**
(Reduction Ratio = 1 : 2.67)

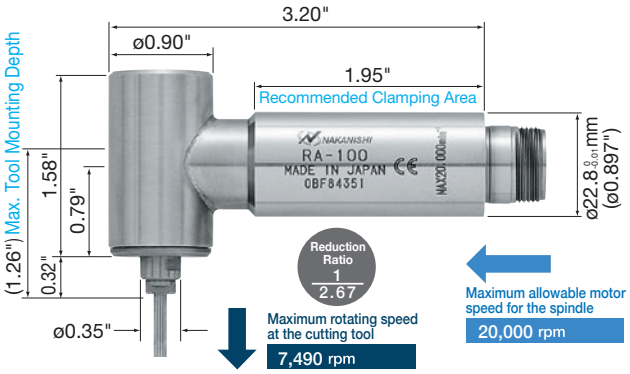

Example : **Speed Reducer ARG-01**
(Reduction Ratio = 1 : 3.92)

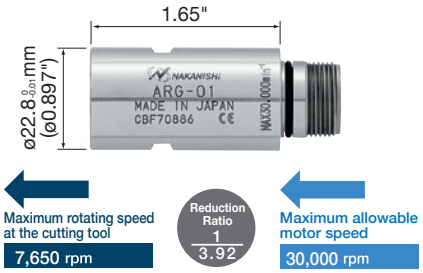

"Recommended Clamping Area" and "Maximum Motor Speed"

● Please refer to the picture below for proper clamping location.

Example : **Spindle NR-3060S**

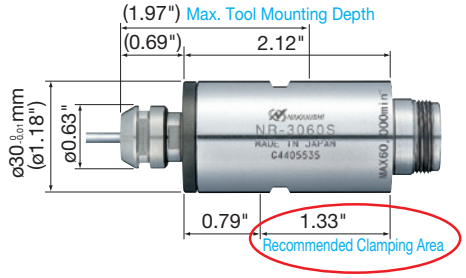

Please refer to the appropriate spindle's catalog page for dimensions.

● The allowable motor speed is printed on the spindle housing.

Example : **Spindle NR-3060S 60,000 rpm**



Please refer to the appropriate spindle's catalog page for dimensions.

"External Input / Output Control Signal Specifications"

● For iSpeed3, iSpeed5, E2000, E3000 & E4000 control signal specifications, please refer to TECHNICAL DATA (7-p2~p39) for complete details.

• iSpeed3 

• iSpeed5 

• E2000 

• E3000 

• E4000 

Installation of Motor and Spindle

- When installing a motor and spindle, it is not recommended to fix the motor or spindle with a fastening bolt in direct contact with the spindle body as shown in Fig.3. This can cause deformation of the spindle body and damage internal components. The installation shown in Fig.1 is the recommended installation method. Therefore, the installation as shown in Fig.1 is the most recommendable.
  (In case it is impossible, install as shown in Fig.2.)
- When mounting the spindle avoid the area where ball bearings are located. If the spindle is mounted inappropriately, this will cause damage to the spindle.
  (Refer to the recommended clamping area drawing in this catalog.)
- Tighten the spindle in the holder using a well-calibrated torque wrench. The correct torque will be different depending on the holder type and accuracy.

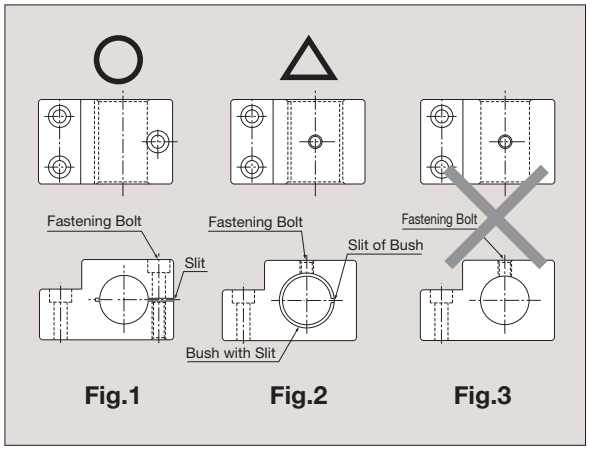

⚠ Caution

- **Even when using the recommended installation method it is possible to deform the spindle housing from excessive clamping force. Use only the clamping force needed to secure the spindle. Do not over tighten.**

Spindle Accuracy

- NAKANISHI's spindle accuracy is measured by the method indicated in the drawings shown in Fig.4.

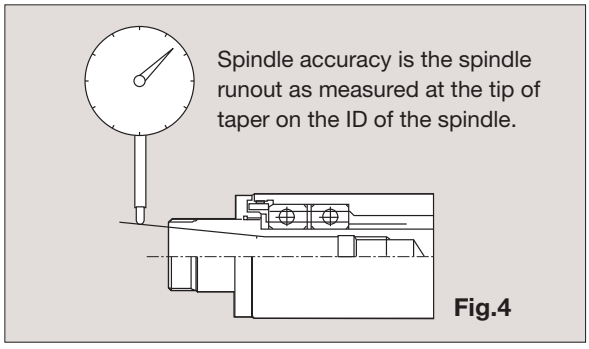

Lubricating Oil

- Lubricating oil is required for air motors, air turbine motors. Please use our standard lubricating oil, or Chevron Superla white oil #9.



• Lubricating Oil (4 oz.)



• Lubricating Oil (32 oz.)

Drilling Capacity Reference Table

This table summarizes the drilling capacity for the spindles. Please use this table as a guide for the selection of the proper model given the torque, speed and size requirements for your application. Data is given for three materials, Iron, Stainless Steel and Aluminum.

*Conditions : High speed steel drill was used with a feed rate of 60 mm/min. Tool life was not considered in determining the above capacities.
Use this table as a reference to extrapolate suitability for a given application.

*Cutting tool capabilities vary depending on the tools being used or cutting conditions.

E3000 Series (Page 2-p37~)

●The following table expresses the E3000 milling & drilling capacity with the max usable cutting tool diameter under our conditions.

ø : Tool Size (mm) S : Spindle Motor Speed {rpm} F : Feed Rate (mm/min) f : Drilling Step (mm/rev)

	Milling			Drilling		
	S50C (Iron)	SUS304 (Stainless Steel)	A2017 (Aluminum)	S50C (Iron)	SUS304 (Stainless Steel)	A2017 (Aluminum)
EM30-S6000	ø2.0	ø2.0	ø2.0	ø2.5	ø1.5	ø3.0
	S16,000 / F480	S12,000 / F250	S57,000 / F2,400	S18,000 / f 0.06	S10,000 / f 0.01	S23,000 / f 0.08
EM25-S6000	ø1.5	ø1.5	ø1.5	ø2.0	ø1.0	ø2.5
	S20,000 / F1,000	S16,000 / F700	S60,000 / F5,000	S20,000 / f 0.05	S12,000 / f 0.01	S23,000 / f 0.07
EM20-S6000	ø1.5	ø1.5	ø1.5	ø2.0	ø1.0	ø2.5
	S20,000 / F100	S16,000 / F100	S60,000 / F1,000	S20,000 / f 0.05	S12,000 / f 0.01	S23,000 / f 0.07

E2000 Series (Page 2-p17~)

●The following table expresses the E2000 milling & drilling capacity with the max usable cutting tool diameter under our conditions.

ø : Tool Size (mm) S : Spindle Motor Speed {rpm} F : Feed Rate (mm/min) f : Drilling Step (mm/rev)

	Milling			Drilling		
	S50C (Iron)	SUS304 (Stainless Steel)	A2017 (Aluminum)	S50C (Iron)	SUS304 (Stainless Steel)	A2017 (Aluminum)
NR-303+ EM25-5000-J4	ø1.5	ø1.5	ø2.0	ø1.5	ø1.0	ø2.5
	S20,000 / F600	S18,000 / F540	S30,000 / F1,500	S20,000 / f 0.05	S15,000 / f 0.01	S25,000 / f 0.03
NR-303+ARG-01+ EM25-5000-J4	ø3.0	ø2.5	ø4.0	ø2.5	ø1.5	ø3.5
	S7,500 / F380	S7,500 / F300	S7,500 / F750	S7,500 / f 0.08	S5,000 / f 0.02	S7,500 / f 0.1

***End Mill Cutting Condition**

- Use End Mill 2 flutes with ultra hard coating.
- Used in conjunction with water or oil based coolants.

***Milling Depth/per**
1D : End Mill Size

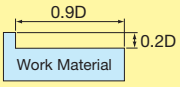

***Drilling Conditions**

- Use Micro Drill with ultra hard coating
- Used in conjunction with water or oil based coolants.

***Drilling/Step**
D : Drilling Size

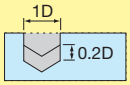

MA Series (Page 3-p1~)

Combination as System			Speed {rpm}	Output (W)	Max. Torque (cN·m)	Max. Drill Diameter for drilling (mm)		
Motor	Speed Reducer	Spindle				S45C	Aluminum	Brass
AM-300R	——	NR-2351	30,000	57	6.9	ø1.0	ø1.5	ø2.0
AM-300R	ARG-01 (1/3.92)	NR-2351	8,000	57	26.5	ø1.9	ø2.9	ø3.4
AM-300R	ARG-02 (1/15.39)	NR-2351	2,000	57	100.9	ø2.8	ø3.8	ø4.5
AM-310R	——	NR-2351	30,000	108	13.7	ø1.5	ø2.0	ø3.0
AM-310R	ARG-01 (1/3.92)	NR-2351	8,000	108	51.9	ø2.5	ø3.5	ø4.0
AM-310R	ARG-02 (1/15.39)	NR-2351	2,000	108	201.9	ø3.5	ø4.3	ø4.8
AM-2526R	——	NR-2551	24,000	130	22.5	ø2.0	ø3.0	ø3.5
AM-2526R	ARG-2504N (1/4)	NR-2551	6,000	130	85.3	ø2.7	ø3.8	ø4.4
AM-2526R	ARG-2516N (1/16)	NR-2551	1,500	130	332.2	ø4.3	ø5.2	ø5.5
AM-3020R	——	NR-453E	19,000	130	27	ø2.3	ø4.0	ø4.5
AM-3020R	ARG-011E (1/4)	NR-453E	4,750	130	108	ø3.2	ø5.0	ø5.5
AM-3020R	ARG-021E (1/16)	NR-453E	1,190	130	432	ø4.0	ø6.0	ø6.0

MS Series (Page 3-p27~)

Series Code	Speed {rpm}	Output (W)	Max. Torque (cN·m)	Max. Dia. of Drill (mm)		
				S45C	Aluminum	Brass
MSS-19 Series <Outside Diameter ø0.75"> MSS-20 Series <Outside Diameter ø0.79"> MSS-22 Series <Outside Diameter ø0.87">	30,000	72	9.2	ø1.0	ø1.5	ø2.0
	8,000	72	36	ø2.0	ø3.0	ø3.5
	2,000	72	141	ø3.0	ø4.0	ø4.0
MSST-23 Series <Outside Diameter ø0.91">	30,000	108	13.7	ø1.5	ø2.0	ø3.0
	8,000	108	52	ø2.5	ø3.5	ø4.0
	2,000	108	202	ø4.0	ø4.6	ø5.2
MSSH-25 Series <Outside Diameter ø1.0"> MSS-25 Series <Outside Diameter ø0.98">	24,000	130	22.5	ø2.0	ø3.0	ø3.5
	6,000	130	85	ø2.7	ø3.8	ø4.4
	1,500	130	332	ø4.3	ø5.2	ø5.5

HES810 (Page 4-p10~)

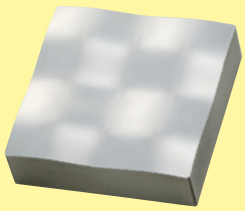

Material		STAVAX (HRC 52) 50 x 50 x 15 (mm)							
Usable Tool		Ultra-Hard Coated Ball End Mill R1.0		CBN Ball End Mill R1.0					
Cutting Process		1. Rough Cutting	2. Semi-Finishing Cutting	3. Finishing Cutting					
Cutting Depth		0.2 x 0.3mm	0.1 x 0.2mm	0.02 x 0.03mm	Total Time	Surface Roughness			
						Cutting Direction		Pf Direction	
						Ryμm	Raμm	Ryμm	Raμm
M/C Main Spindle 20,000 rpm	Work Feed mm / min	1,600	1,600	1,000	2h12min	1.1687	0.1420	1.6646	0.2336
		4 times	4 times	4 times	1/3				
HES810 80,000 rpm		6,400	6,400	4,000	45min	0.8518	0.1305	1.7495	0.2269

HTS1501 (Page 4-p17~)

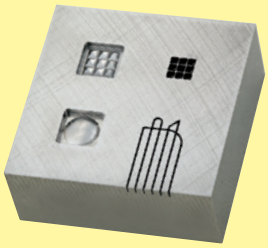

Material	NAK80 (HRC 40)
Motor Speed	150,000 rpm
Usable Tool	R 0.2 x 2L Ball End Mill
Rough Cutting	Ad 0.03 x Rd 0.04mm
Work Feed	2,000mm/min
Finishing Cutting	Ad 0.01 x Rd 0.01mm
Work Feed	1,500mm/min
Total Time	4h 31min

HTS1501 (Page 4-p17~)

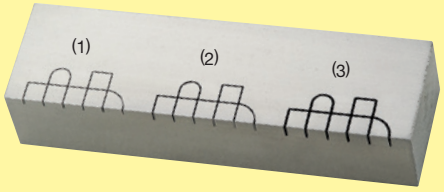

Material	NAK80 (HRC 40)		
Motor Speed	150,000 rpm		
Sample No.	(1)	(2)	(3)
Usable Tool	ø0.2 x 2	ø0.3 x 3	ø0.4 x 4
Cutting Depth	Ad 0.003mm	Ad 0.005mm	Ad 0.007mm
Work Feed	2,000mm/min		
Total Time	29min. 50sec.	27min. 43sec.	26min. 22sec.

1
EmaxEVO
ESPERT
ROTUS
IMPULSE
PRESTO II
Sheenus ZERO
2
iSpeed3
E2000
ø1.0"/ø0.98"/ø0.897"
E3000
– One Piece
E3000
– Modular
ø1.18"
ø1.0"/ø0.98"
ø0.897"
E3000
– 80,000rpm
E4000
3
MA
ø0.897"
ø1.0"
ø0.98"
ø1.18"
MS
ø0.75"
ø0.79"
ø0.87"
ø0.91"
ø1.0"
ø0.98"
4
HES
iSpeed5
HTS
HPS
PLANET
Xpeed
ABT
5
AIR LINE KIT
6
PARTS
7
TECHNICAL DATA
8
APPLICATION EXAMPLES
INDEX

TYPICAL APPLICATION EXAMPLES OF NAKANISHI INDUSTRIAL TOOLS

RECOMMENDATION FOR MACHINING USING SMALL, MICRO, AND NANO DRILLS AND END MILLS.

In recent years, manufacturing has experienced a large demand for small hole drilling and cross-hole drilling, small diameter milling as well as micro milling and drilling. Conventional speeds on CNC lathes and machining centers is now inadequate to properly machine with this type of tooling. When using a tool with a diameter of 2.0 mm or smaller, speeds of well over 10,000 rpm are required. Insufficient speed will greatly decrease tool life, extend machining cycle times and offer poor surface finishes. Parts manufacturers who are interested in eliminating second operation work, increasing productivity, performance and part quality as well as staying competitive should consider an ultra precision 2,000 ~ 200,000 rpm spindle developed by NAKANISHI. Please see our “Typical Application Examples of NAKANISHI Industrial Tools” for a few examples of our applications.

Index

E3000 SERIES ····· 8-p2~8-p7

MA SERIES ····· 8-p7~8-p12

MS SERIES ····· 8-p4, 8-p12~8-p14

HES SERIES ····· 8-p15, 8-p16

E3000 SERIES

- **APPLICATION EXAMPLE : COMPLEX PROCESS**
- **WORK PIECE : BRASS**
- **WORK CONDITIONS :**

(1) EM-3060 + ARG-021E + NR-453E
ø45 x t 1.1 METAL SAWING ; TOOL SPEED : 1,800 rpm ; FEED : 20 mm/min

(2) EM-3060 + NR-453E
ø1 DRILLING ; TOOL SPEED : 10,000 rpm ; FEED : 100 mm/min

(3) EM-3060 + ARG-011E + NR-453E
ø3 DRILLING ; TOOL SPEED : 4,000 rpm ; FEED : 80 mm/min

- **INSTALLATION : NC LATHE**



INSTALLATION

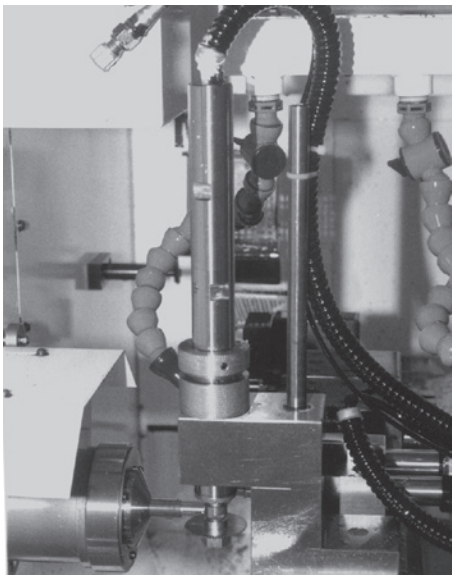

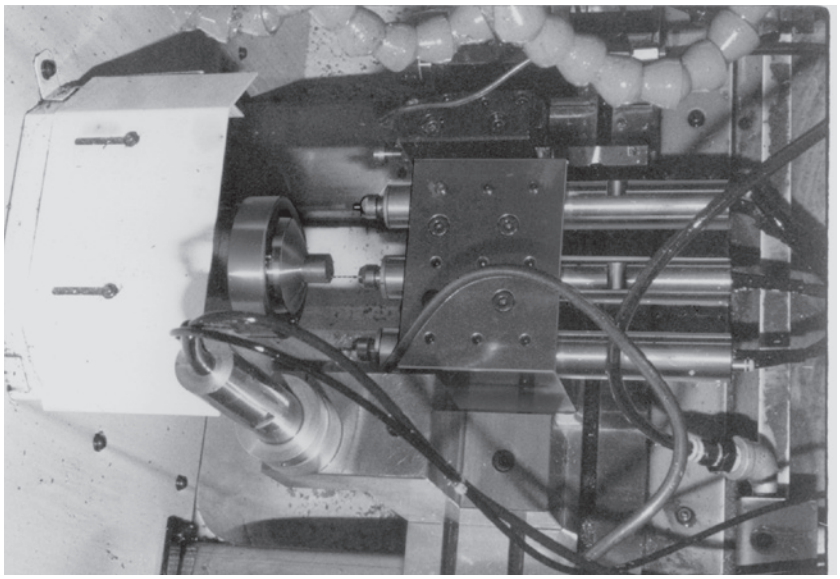

<Application Example, Installation>

E3000 SERIES 1,000~60,000 rpm Output 350 W

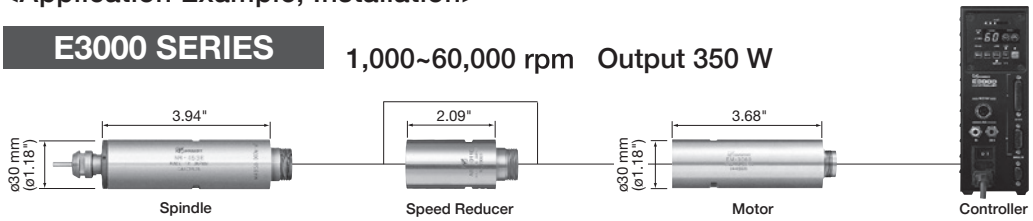

E3000 SERIES

- **APPLICATION EXAMPLE : COMPLEX PROCESS**
- **WORK PIECE : RESIN**
- **WORK CONDITIONS :**

(1) EM-3060 + NR-453E
ø1.0 DRILLING ; TOOL SPEED : 3,000 rpm ; FEED : 180 mm/min

(2) EM-3060 + NR-453E
ø30 GRINDING STONE ; TOOL SPEED : 35,000 rpm ; FEED : 250 mm/min

- **INSTALLATION : NC LATHE**



INSTALLATION

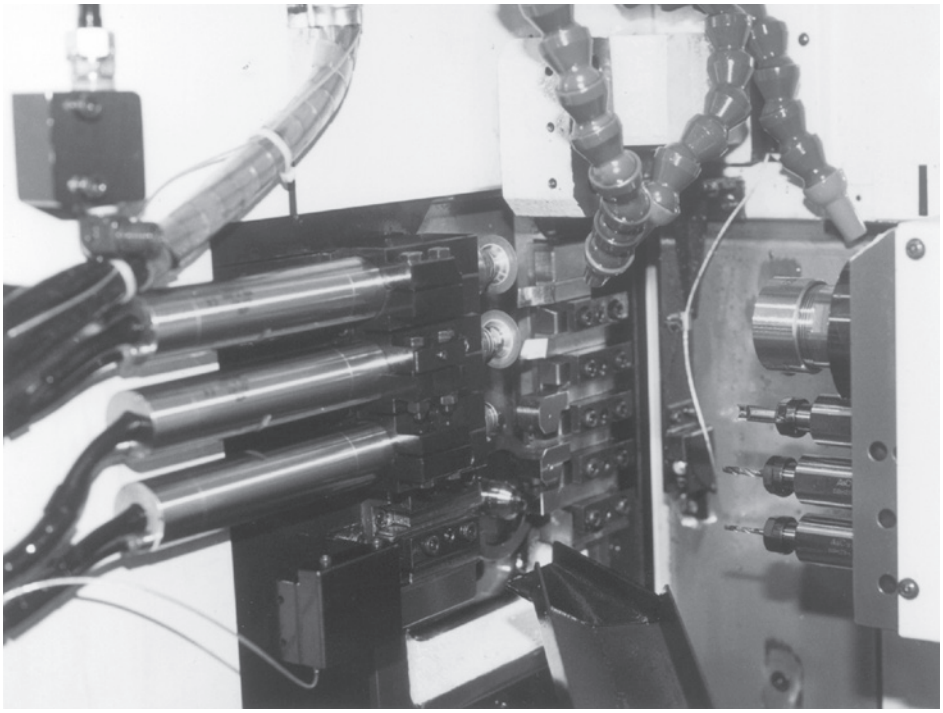

<Application Example, Installation>

E3000 SERIES 1,000~60,000 rpm Output 350 W

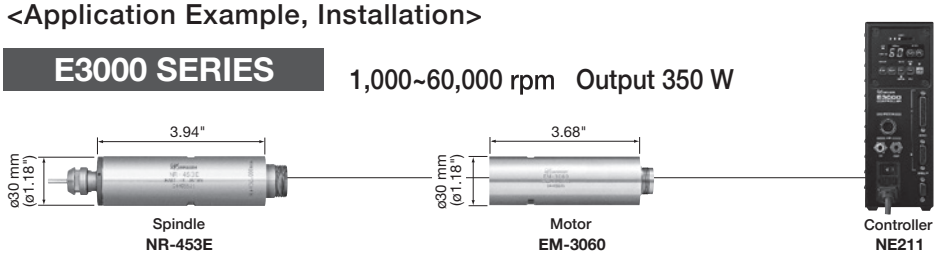

E3000 SERIES / MS SERIES

1
EmaxEVO
ESPERT
ROTUS
IMPULSE
PRESTO II
Sheenus ZERO
2
iSpeed3
E2000 ø1.0"/ø0.98"/ø0.897"
E3000 – One Piece
E3000 – Modular
ø1.18"
ø1.0"/ø0.98" ø0.897"
E3000 – 80,000rpm
E4000
3
MA
ø0.897"
ø1.0" ø0.98"
ø1.18"
MS
ø0.75" ø0.79"
ø0.87" ø0.91"
ø1.0" ø0.98"
4
HES
iSpeed5
HTS
HPS
PLANET
Xpeed
ABT
5
AIR LINE KIT
6
PARTS
7
TECHNICAL DATA
8
APPLICATION EXAMPLES
INDEX

- **APPLICATION EXAMPLE : COMPLEX PROCESS**
- **WORK PIECE : BRASS**
- **WORK CONDITIONS :**

(1) EM-3060 + NR-453E
ø1.5 END MILLING ; TOOL SPEED : 7,500 rpm ; FEED : 60 mm/min

(2) MSS-1902RA
ø2 DRILLING ; TOOL SPEED : 2,000 rpm ; FEED : 100 mm/min

(3) MSS-1908RA
ø1 DRILLING ; TOOL SPEED : 8,000 rpm ; FEED : 100 mm/min

- **INSTALLATION : NC LATHE**



INSTALLATION

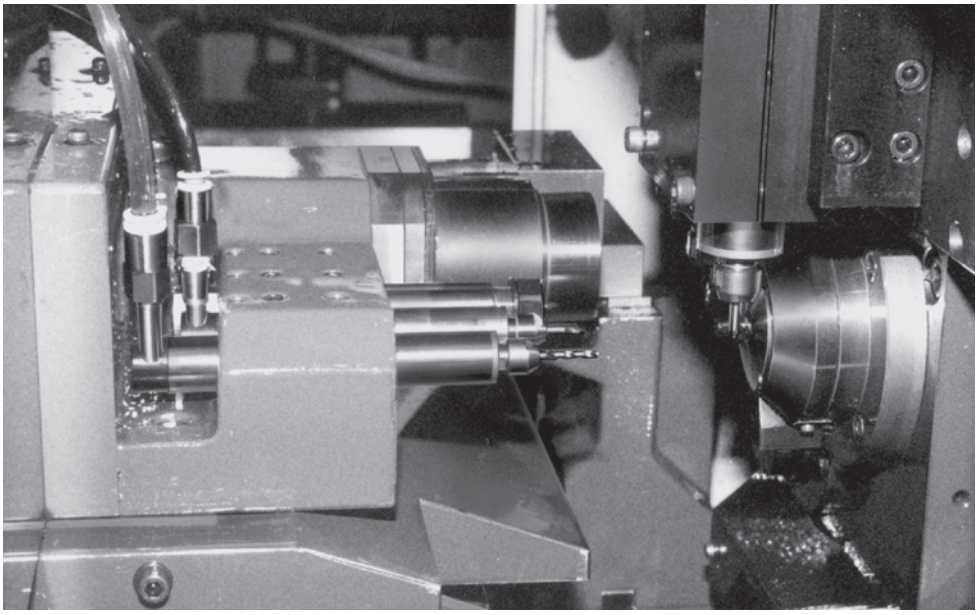

<Application Example, Installation>

E3000 SERIES

1,000~60,000 rpm Output 350 W

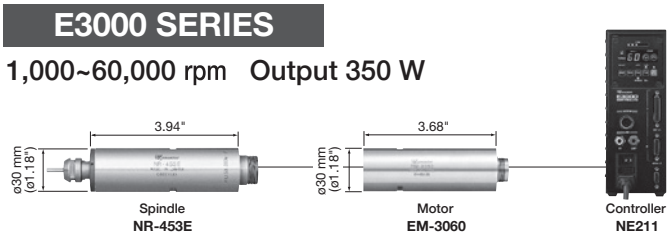

MS SERIES

30,000 · 8,000 · 2,000 rpm Output 72 W

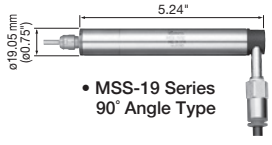

E3000 SERIES

- **APPLICATION EXAMPLE : COMPLEX PROCESS**
- **WORK CONDITIONS :**

(1) SPINDLE : E3000 EM30-S6000
MAX POWER : 350 W ; MAX RPM : 60,000 rpm ; SPINDLE SIZE : ø30 mm
MACHINE : FANUC ROBODRILL
MAX RPM : 10,000 rpm

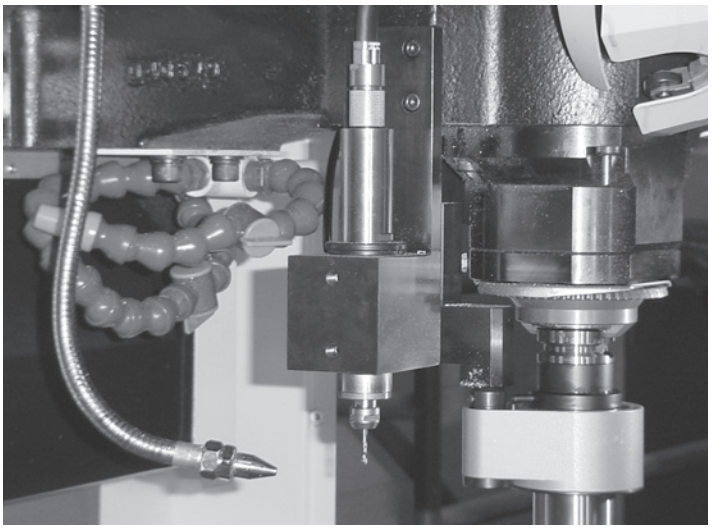

EXAMPLE: NAKANISHI E3000 ELECTRIC MOTOR / SPINDLE MOUNTED DIRECTLY INTO THE SIDE OF THE MACHINES MAIN SPINDLE. THIS APPLICATION ALLOWS AN ELECTRIC HIGH SPEED SPINDLE TO BE USED WITHOUT THE NEED FOR A TOOL CHANGEABLE ELECTRIC SPINDLE.

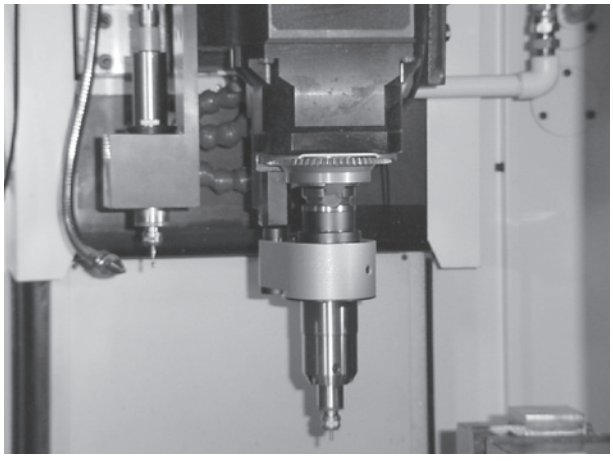

ALL NAKANISHI SPINDLE FUNCTIONS ARE COMMANDED AND MONITORED FROM THE MACHINES CONTROLLER. (Shown with HPS500-BT30 Tool Changeable Air Spindle in machines main spindle)

<Application Example, Installation>

E3000 SERIES

1,000~60,000 rpm Output 350 W

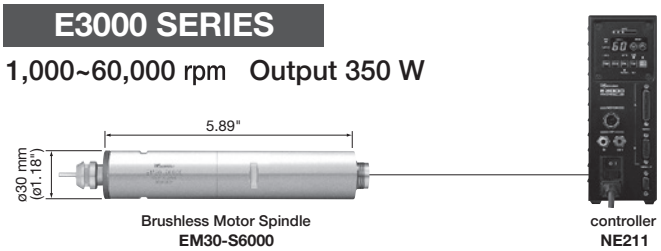

1
EmaxEVO
ESPERT
ROTUS
IMPULSE
PRESTO II
Sheenus ZERO
2
iSpeed3
E2000 ø1.0"/ø0.98"/ø0.897"
E3000 – One Piece
E3000 – Modular
ø1.18"
ø1.0"/ø0.98" ø0.897"
E3000 – 80,000rpm
E4000
3
MA
ø0.897"
ø1.0" ø0.98"
ø1.18"
MS
ø0.75" ø0.79"
ø0.87" ø0.91"
ø1.0" ø0.98"
4
HES
iSpeed5
HTS
HPS
PLANET
Xpeed
ABT
5
AIR LINE KIT
6
PARTS
7
TECHNICAL DATA
8
APPLICATION EXAMPLES
INDEX

E3000 SERIES

- **APPLICATION EXAMPLE : END MILLING**
- **WORK PIECE : RESIN**
- **WORK CONDITIONS :**

  (1) EM-3060 + ARG-011E + NR-453E

  ø6 END MILLING ; TOOL SPEED : 5,000 rpm ; FEED : 500 mm/min
- **INSTALLATION : SPECIAL PURPOSE MACHINE**

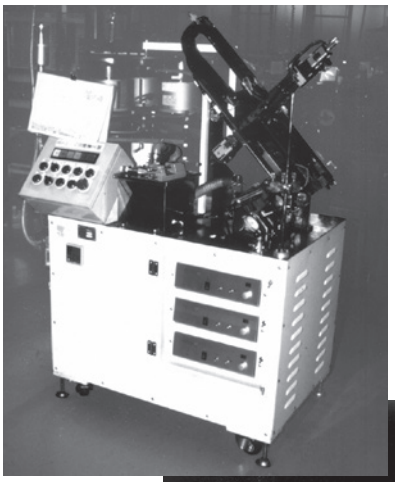

INSTALLATION

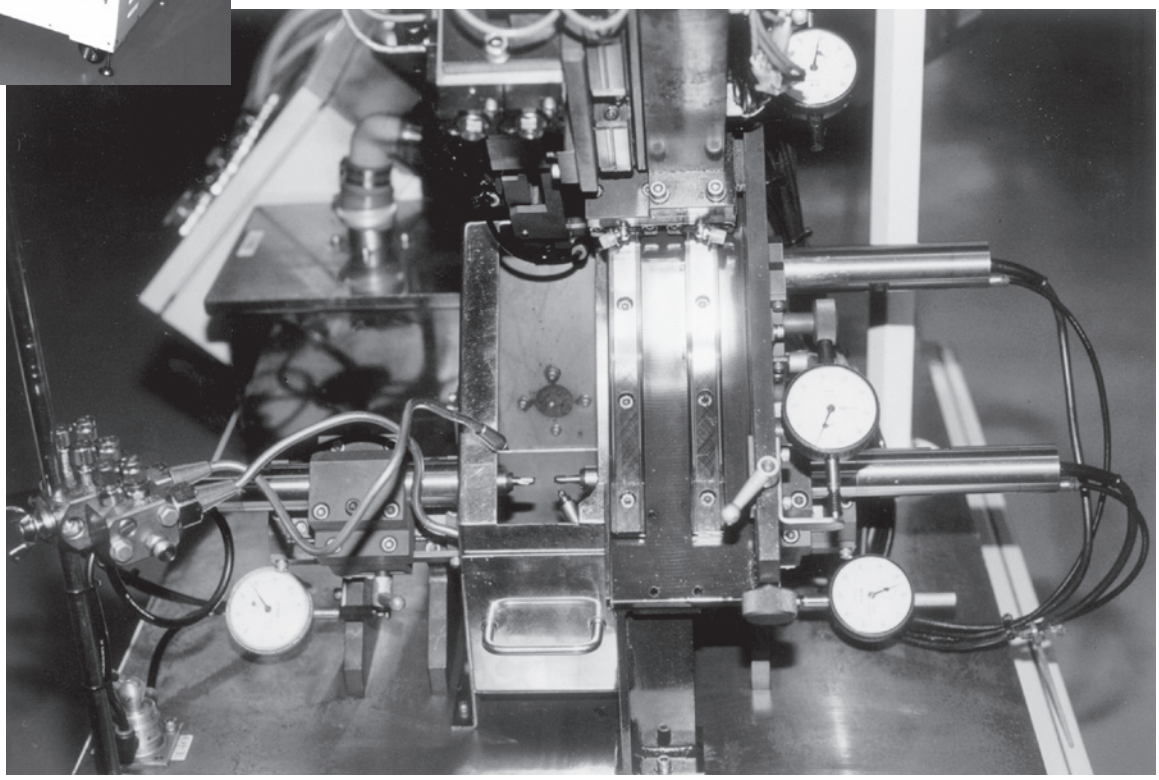

<Application Example, Installation>

E3000 SERIES 1,000~60,000 rpm Output 350 W

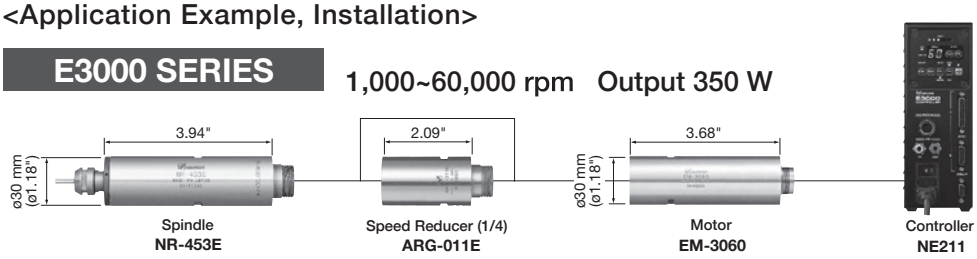

1
EmaxEVO
ESPERT
ROTUS
IMPULSE
PRESTO II
Sheenus ZERO
2
iSpeed3
E2000 ø1.0"/ø0.98"/ø0.897"
E3000 – One Piece
E3000 – Modular
ø1.18"
ø1.0"/ø0.98" ø0.897"
E3000 – 80,000rpm
E4000
3
MA
ø0.897"
ø1.0" ø0.98"
ø1.18"
MS
ø0.75" ø0.79"
ø0.87" ø0.91"
ø1.0" ø0.98"
4
HES
iSpeed5
HTS
HPS
PLANET
Xpeed
ABT
5
AIR LINE KIT
6
PARTS
7
TECHNICAL DATA
8
APPLICATION EXAMPLES
INDEX

MA SERIES / E3000 SERIES

- **APPLICATION EXAMPLE : AIR MOTOR CYLINDER PLATE**
- **WORK PIECE : BRASS**
- **WORK CONDITIONS :**

(1) AM-300R + ARG-02 + NR-303
ø24 x t 1.1 METAL SAWING ; TOOL SPEED : 2,000 rpm ; FEED : 50 mm/min

(2) EM-3060 + ARG-021E + NR-453E
ø3.6 $^{+0.04}_{+0.03}$ END MILLING ; TOOL SPEED : 1,750 rpm ; FEED : 50 mm/min

(3) AM-300R + ARG-02 + NR-303
ø2.5 DRILLING ; TOOL SPEED : 2,000 rpm ; FEED : 70 mm/min

(4) AM-300RA + ARG-01 + NR-303
ø1.1 DRILLING ; TOOL SPEED : 8,000 rpm ; FEED : 50 mm/min

- **INSTALLATION : GANG TOOL NC LATHE**



INSTALLATION

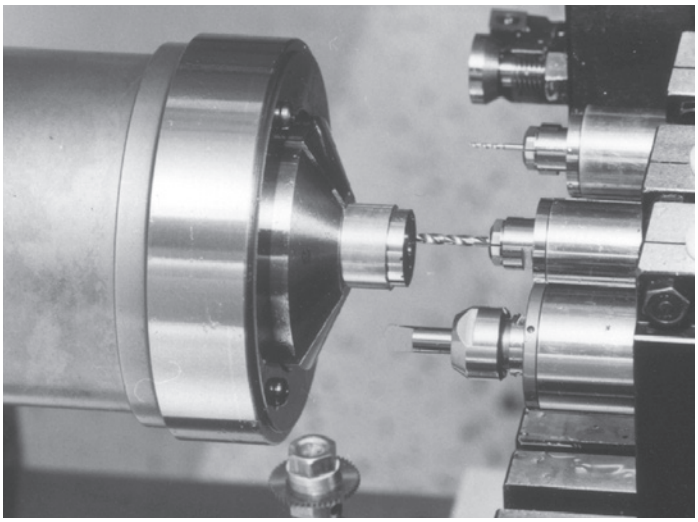

<Application Example, Installation>

MA SERIES 2,000~30,000 rpm Output 57 W

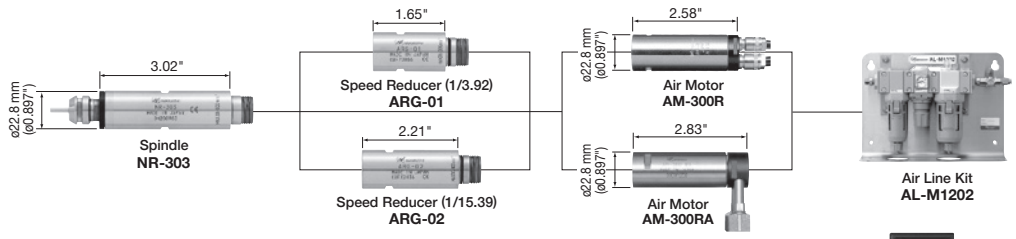

E3000 SERIES 1,000~60,000 rpm Output 350 W

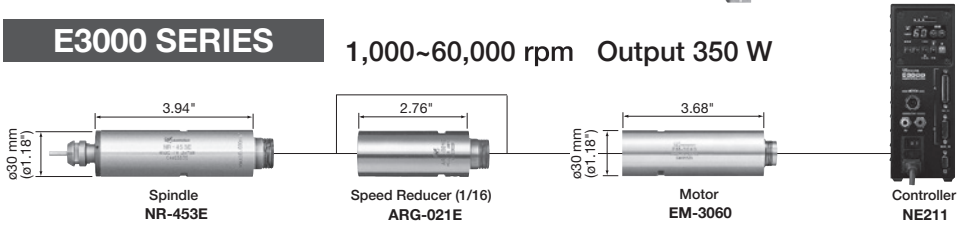

MA SERIES

- **APPLICATION EXAMPLE : METAL SAW SHAFT (END MILLING)**
- **WORK PIECE : SUS-420**
- **WORK CONDITIONS :**

  (1) AM-300R + ARG-02 + NR-303

  ø2 END MILLING ; TOOL SPEED : 2,000 rpm ; FEED : 50 mm/min
- **INSTALLATION : NC LATHE**



INSTALLATION

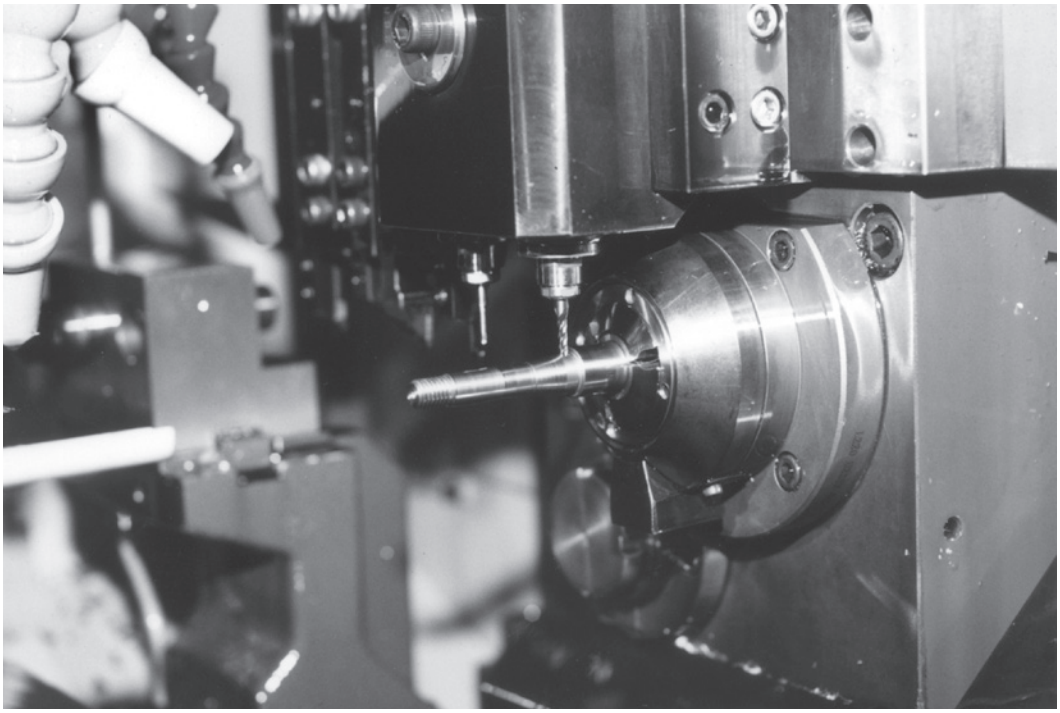

<Application Example, Installation>

MA SERIES 2,000~30,000 rpm Output 57 W

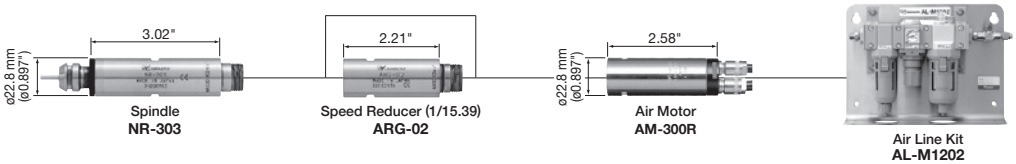

MA SERIES

- **APPLICATION EXAMPLE : SMALL DIAMETER DRILLING**
- **WORK PIECE : BRASS**
- **WORK CONDITIONS :**

  (1) AM-300R + NR-303

  ø0.78 DRILLING 1.5 mm deep ; TOOL SPEED : 30,000 rpm ; FEED : 100 mm/min
- **INSTALLATION : NC LATHE**

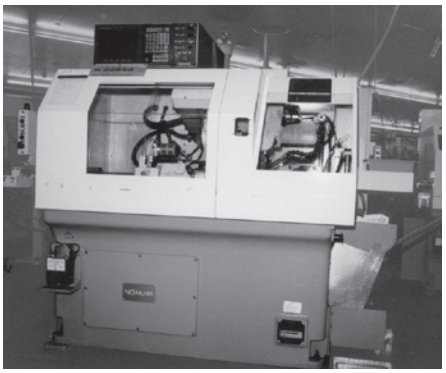

INSTALLATION

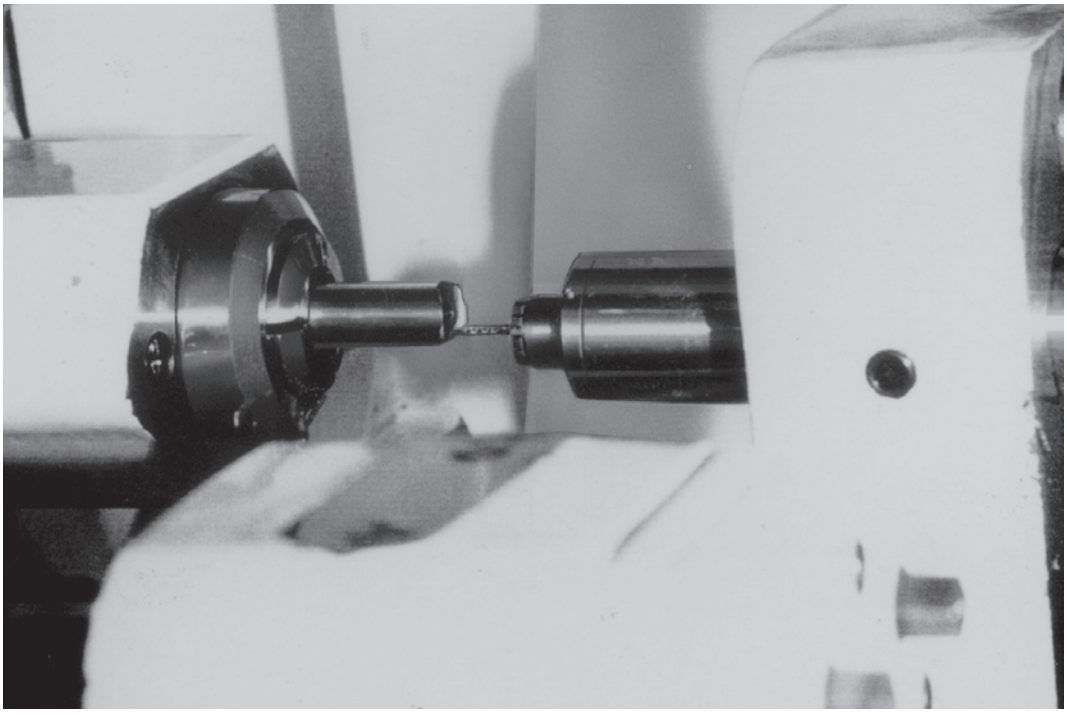

<Application Example, Installation>

MA SERIES 2,000~30,000 rpm Output 57 W

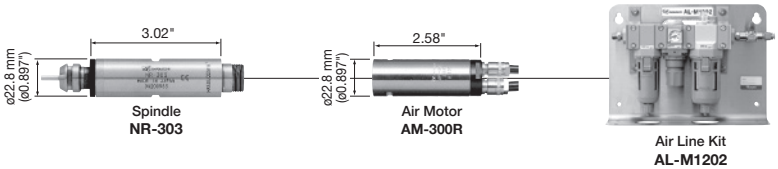

MA SERIES

- **APPLICATION EXAMPLE : SMALL DIAMETER END MILLING**
- **WORK PIECE : BRASS**
- **WORK CONDITIONS :**

  (1) AM-310R + NR-303

  ø3.0 END MILLING ; TOOL SPEED : 30,000 rpm ; FEED : 60 mm/rev
- **INSTALLATION : NC LATHE (TORNOS DECO 2000)**



INSTALLATION

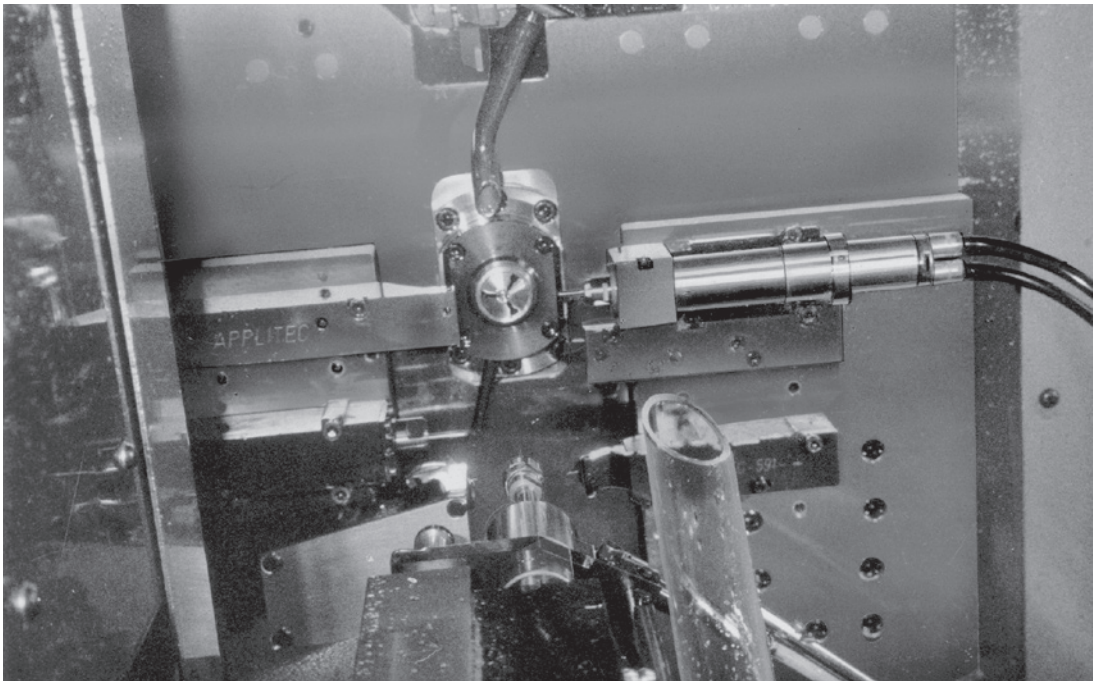

<Application Example, Installation>

MA SERIES 2,000~30,000 rpm Output 108 W

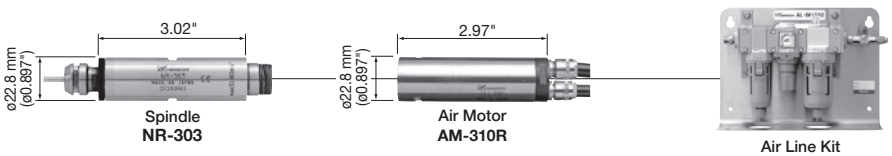

1
EmaxEVO
ESPERT
ROTUS
IMPULSE
PRESTO II
Sheenus ZERO
2
iSpeed3
E2000 ø1.0"/ø0.98"/ø0.897"
E3000 – One Piece
E3000 – Modular
ø1.18"
ø1.0"/ø0.98" ø0.897"
E3000 – 80,000rpm
E4000
3
MA
ø0.897"
ø1.0" ø0.98"
ø1.18"
MS
ø0.75" ø0.79"
ø0.87" ø0.91"
ø1.0" ø0.98"
4
HES
iSpeed5
HTS
HPS
PLANET
Xpeed
ABT
5
AIR LINE KIT
6
PARTS
7
TECHNICAL DATA
8
APPLICATION EXAMPLES
INDEX

MA SERIES

- **APPLICATION EXAMPLE : END MILLING**
- **WORK PIECE : SUS**
- **WORK CONDITIONS :**

(1) AM-300RA + NR-303
ø1.2 END MILLING ; TOOL SPEED : 30,000 rpm ; FEED : 50 mm/min

(2) AM-300RA + NR-303
ø0.6 END MILLING ; TOOL SPEED : 30,000 rpm ; FEED : 50 mm/min

- **INSTALLATION : NC LATHE**

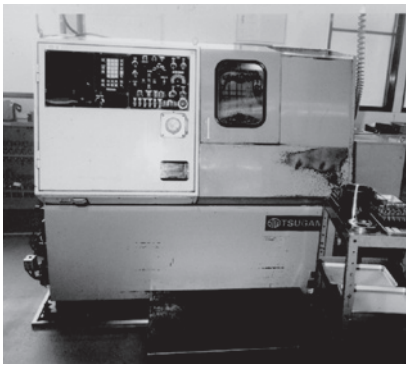

INSTALLATION

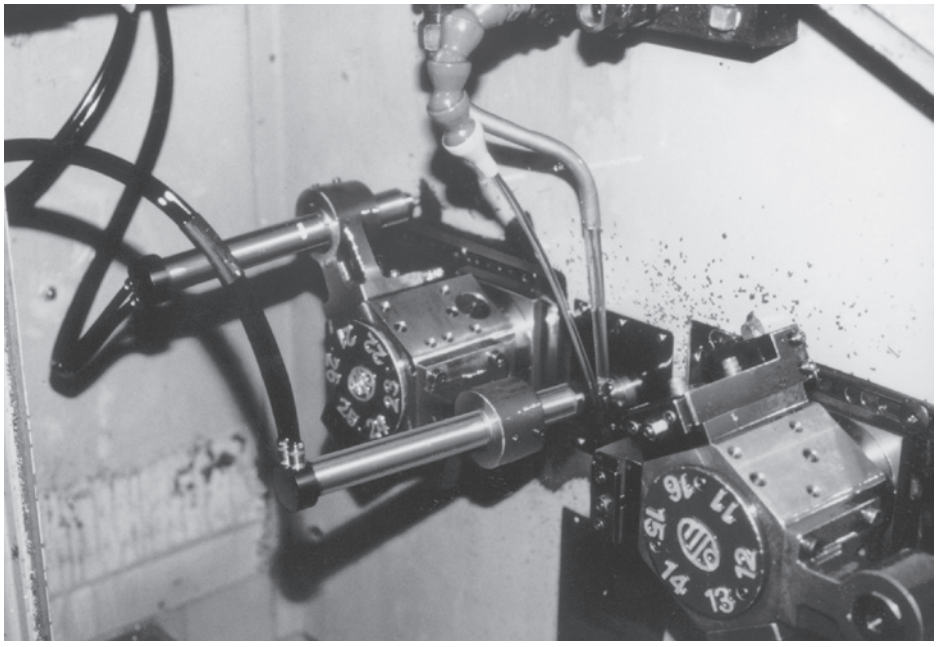

<Application Example, Installation>

MA SERIES 2,000~30,000 rpm Output 57 W

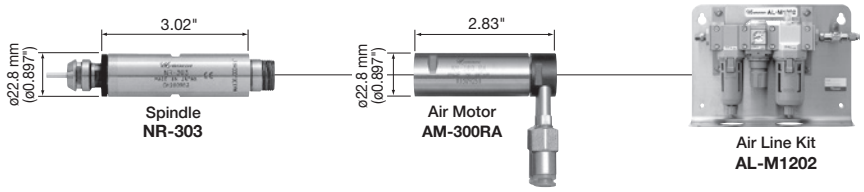

MA SERIES / MS SERIES

1
EmaxEVO
ESPERT
ROTUS
IMPULSE
PRESTO II
Sheenus ZERO
2
iSpeed3
E2000 ø1.0"/ø0.98"/ø0.897"
E3000 – One Piece
E3000 – Modular
ø1.18"
ø1.0"/ø0.98" ø0.897"
E3000 – 80,000rpm
E4000
3
MA
ø0.897"
ø1.0" ø0.98"
ø1.18"
MS
ø0.75" ø0.79"
ø0.87" ø0.91"
ø1.0" ø0.98"
4
HES
iSpeed5
HTS
HPS
PLANET
Xpeed
ABT
5
AIR LINE KIT
6
PARTS
7
TECHNICAL DATA
8
APPLICATION EXAMPLES
INDEX

- **APPLICATION EXAMPLE : COMPLEX PROCESS**
- **WORK PIECE : BRASS**
- **WORK CONDITIONS :**

(1) AM-300R + ARG-02 + NR-303
ø10 METAL SAWING ; TOOL SPEED : 2,000 rpm ; FEED : 30 mm/min

(2) AM-300R + NR-303 or MSST-2330R
ø0.5 DRILLING ; TOOL SPEED : 30,000 rpm ; FEED : 40 mm/min

- **INSTALLATION : NC LATHE**

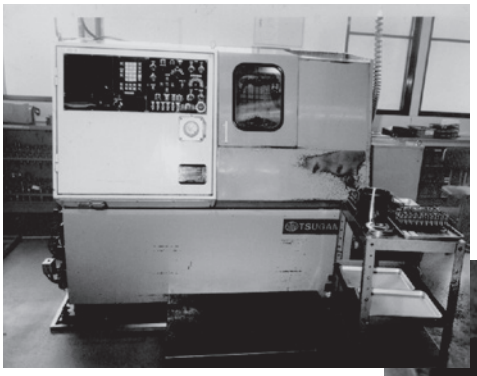

INSTALLATION

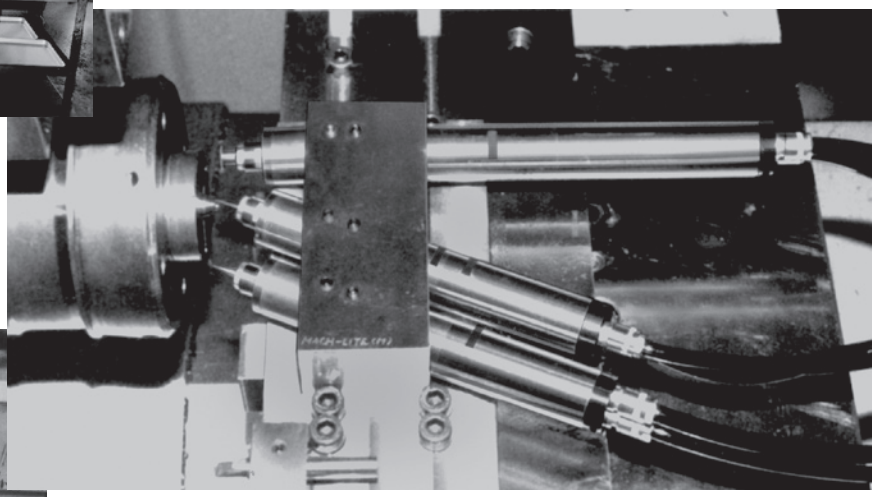

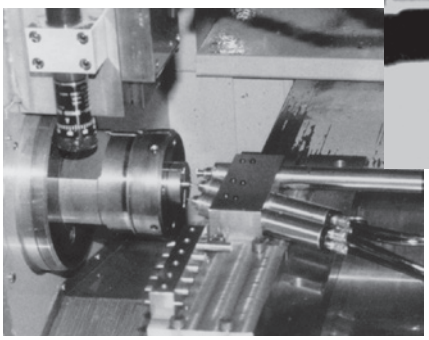

<Application Example, Installation>

MA SERIES

2,000~30,000 rpm Output 57 W

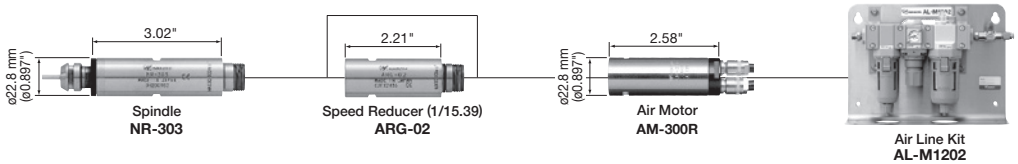

Spindle
NR-303

Speed Reducer (1/15.39)
ARG-02

Air Motor
AM-300R

Air Line Kit
AL-M1202

MS SERIES

30,000 · 8,000 · 2,000 rpm Output 108 W

• MSST-23 Series Straight Type

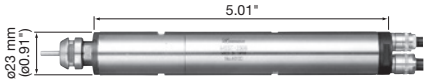

MS SERIES

- **APPLICATION EXAMPLE : METAL SAWING AND SLOTTING**
- **WORK PIECE : SUS-440C**
- **WORK CONDITIONS :**

  (1) MSST-2302R

  ø50 x t 0.3 FINE CUTTER ; TOOL SPEED : 15,000 rpm ; FEED : 0.028 mm/rev
- **INSTALLATION : SPECIAL PURPOSE MACHINE**

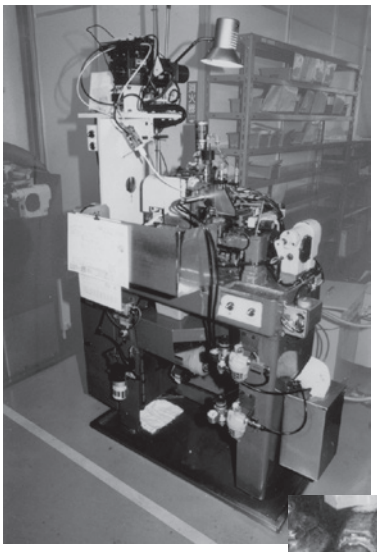

INSTALLATION

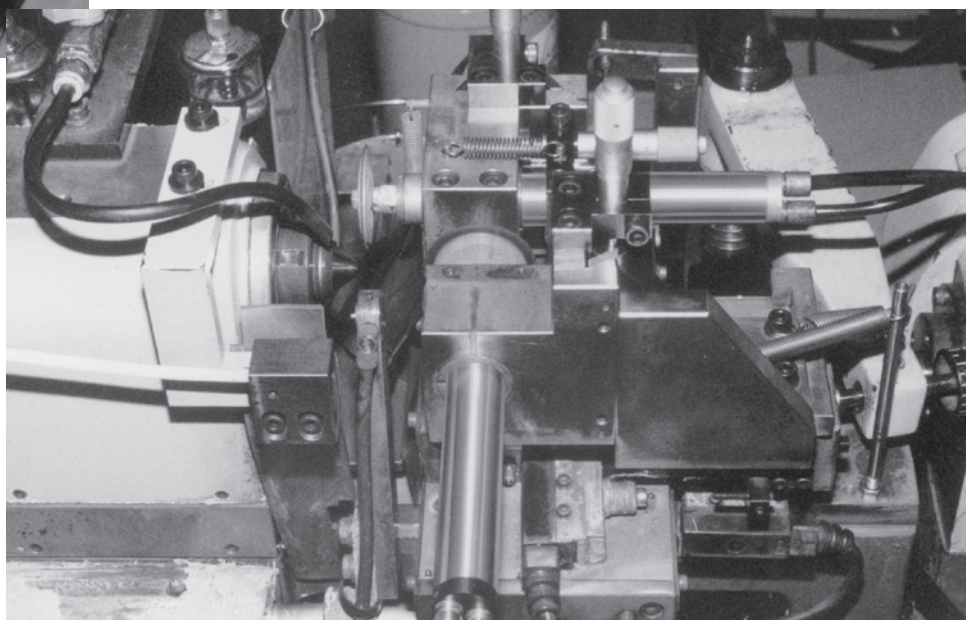

<Application Example, Installation>

MS SERIES 30,000 · 8,000 · 2,000 rpm Output 108 W

• MSST-23 Series Straight Type



MS SERIES

- **APPLICATION EXAMPLE : DRILLING**
- **WORK PIECE : S-45C**
- **WORK CONDITIONS :**

  (1) MSST-2302R

  ø5 DRILLING ; TOOL SPEED : 2,000 rpm ; FEED : 30 mm/min
- **INSTALLATION : NC MILLING LATHE**

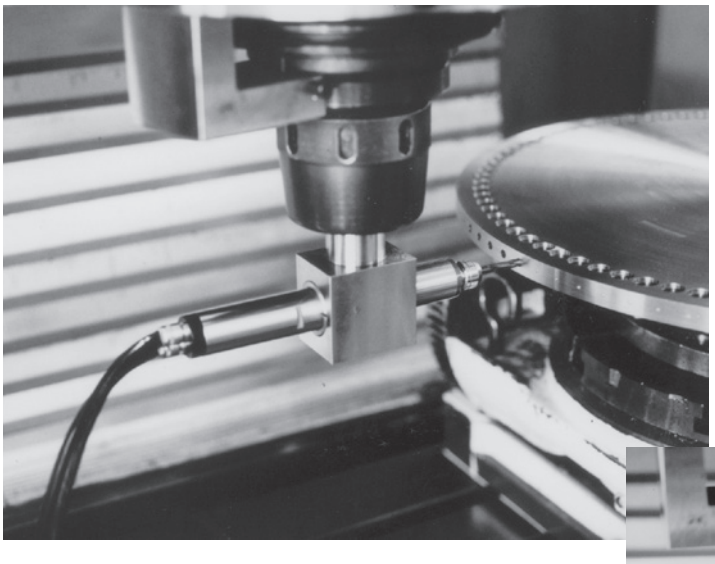

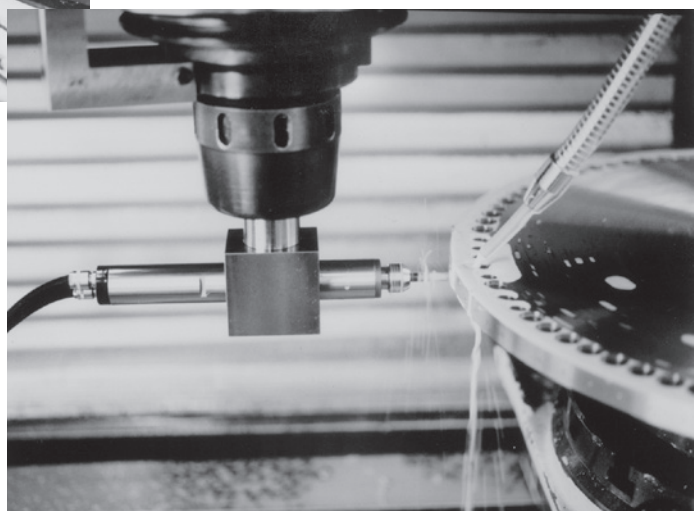

<Application Example, Installation>

MS SERIES 30,000 · 8,000 · 2,000 rpm Output 108 W

• MSST-23 Series Straight Type



HES SERIES

- **APPLICATION EXAMPLE : SMALL DIAMETER END MILLING FOR RIB PROCESSING**
- **WORK PIECE : FPH40 (HRC35-40)**
- **WORK CONDITIONS :**
  (1) HES510-NT40
  ø1 mm END MILLING
  ; TOOL SPEED : 40,000 rpm ; FEED : 1,000 mm/min ; DEPTH OF CUT : 20 µm
- **INSTALLATION : NC MILLING LATHE**

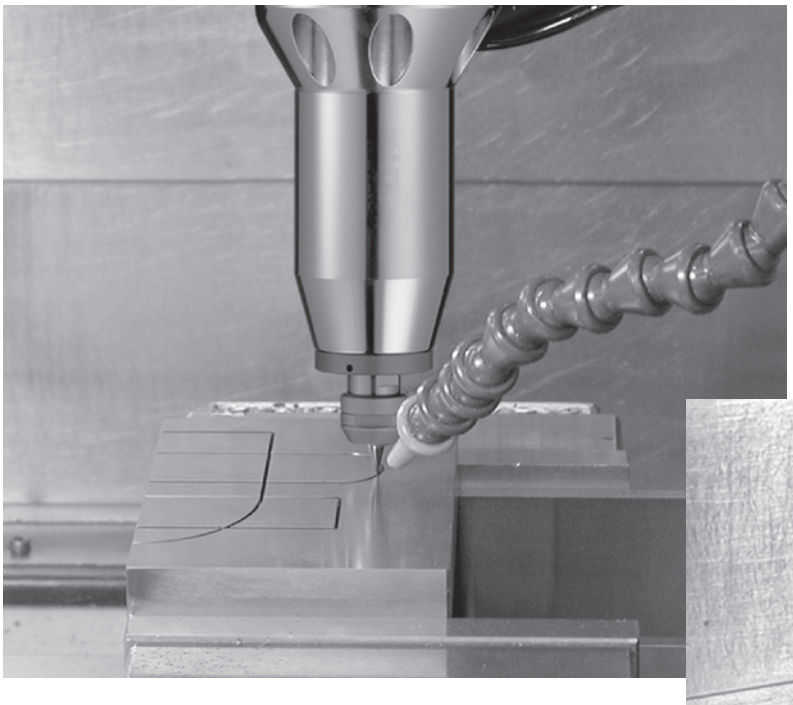

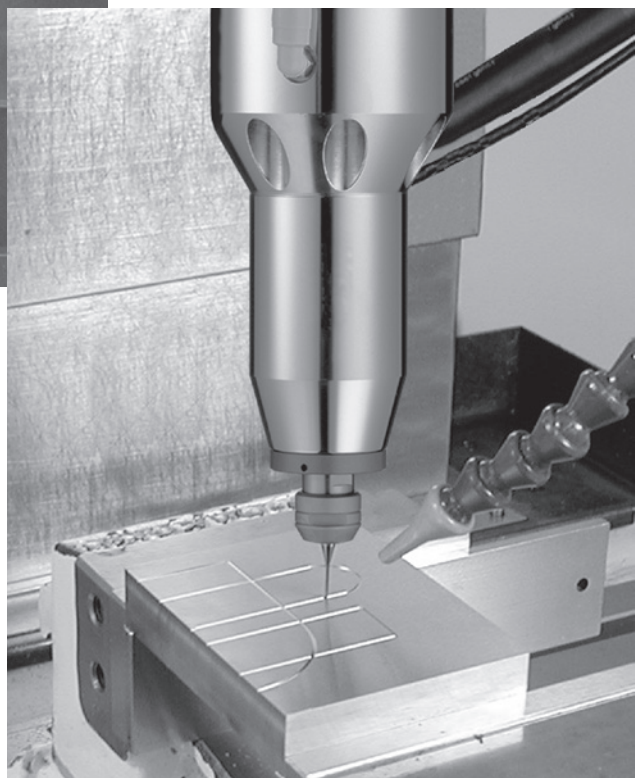

<Application Example, Installation>

HES SERIES

5,000~50,000 rpm

• HES510-NT40

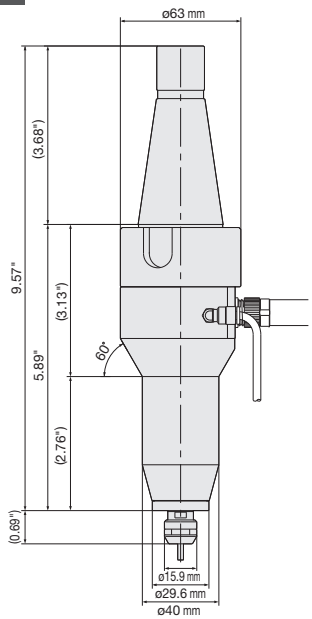

HES SERIES

- **APPLICATION EXAMPLE : COMPLEX PROCESS**
- **WORK CONDITIONS :**

(1) SPINDLE : HES510-R8
MAX POWER : 340 W ; MAX RPM : 50,000 rpm
MACHINE : KNEE MILL
MAX RPM : 4,000 rpm

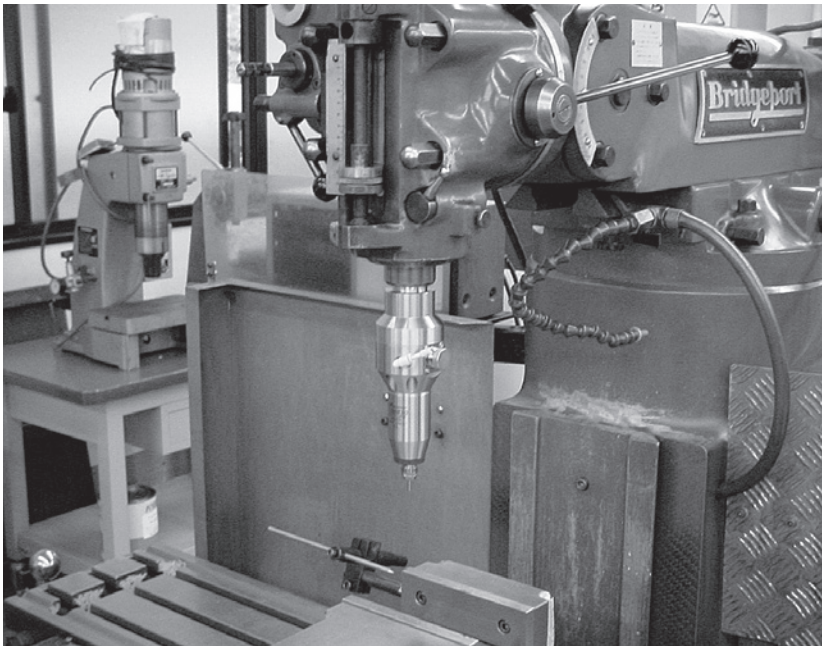

EXAMPLE: NAKANISHI HES510-R8 MOUNTED DIRECTLY INTO THE MACHINES SPINDLE TO ALLOW SECOND OPERATION DRILLING, MILLING OR GRINDING ON A MACHINE THAT HAS INSUFFICIENT RPM FOR SMALL DIAMETER CUTTERS.

<Application Example, Installation>

HES SERIES

5,000~50,000 rpm

- HES510-R8

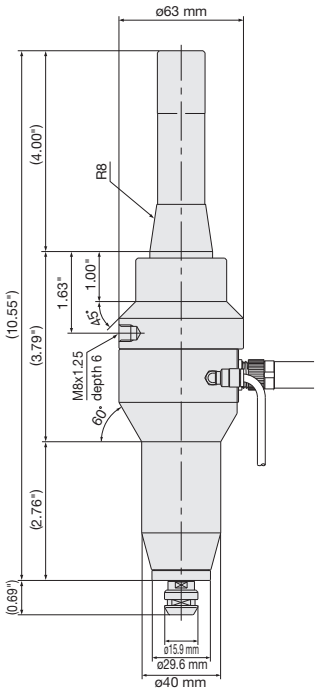

1
EmaxEVO
ESPERT
ROTUS
IMPULSE
PRESTO II
Sheenus ZERO
2
iSpeed3
E2000 ø1.0"/ø0.98"/ø0.897"
E3000 – One Piece
E3000 – Modular
ø1.18"
ø1.0"/ø0.98" ø0.897"
E3000 – 80,000rpm
E4000
3
MA
ø0.897"
ø1.0" ø0.98"
ø1.18"
MS
ø0.75" ø0.79"
ø0.87" ø0.91"
ø1.0" ø0.98"
4
HES
iSpeed5
HTS
HPS
PLANET
Xpeed
ABT
5
AIR LINE KIT
6
PARTS
7
TECHNICAL DATA
8
APPLICATION EXAMPLES
INDEX

1
EmaxEVO
ESPERT
ROTUS
IMPULSE
PRESTO II
Sheenus ZERO
2
iSpeed3
E2000
ø1.0"/ø0.98"/ø0.897"
E3000
– One Piece
E3000
– Modular
ø1.18"
ø1.0"/ø0.98"
ø0.897"
E3000
– 80,000rpm
E4000
3
MA
ø0.897"
ø1.0"
ø0.98"
ø1.18"
MS
ø0.75"
ø0.79"
ø0.87"
ø0.91"
ø1.0"
ø0.98"
4
HES
iSpeed5
HTS
HPS
PLANET
Xpeed
ABT
5
AIR LINE KIT
6
PARTS
7
TECHNICAL DATA
8
APPLICATION EXAMPLES
INDEX

1
EmaxEVO
ESPERT
ROTUS
IMPULSE
PRESTO II
Sheenus ZERO
2
iSpeed3
E2000
ø1.0"/ø0.98"/ø0.897"
E3000
– One Piece
E3000
– Modular
ø1.18"
ø1.0"/ø0.98"
ø0.897"
E3000
– 80,000rpm
E4000
3
MA
ø0.897"
ø1.0"
ø0.98"
ø1.18"
MS
ø0.75"
ø0.79"
ø0.87"
ø0.91"
ø1.0"
ø0.98"
4
HES
iSpeed5
HTS
HPS
PLANET
Xpeed
ABT
5
AIR LINE KIT
6
PARTS
7
TECHNICAL DATA
8
APPLICATION EXAMPLES
INDEX

INDEX

Product Code ▶

1
EmaxEVO
ESPERT
ROTUS
IMPULSE
PRESTO II
Sheenus ZERO
2
iSpeed3
E2000
ø1.0"/ø0.98"/ø0.897"
E3000
– One Piece
E3000
– Modular
ø1.18"
ø1.0"/ø0.98"
ø0.897"
E3000
– 80.000rpm
E4000
3
MA
ø0.897"
ø1.0"
ø0.98"
ø1.18"
MS
ø0.75"
ø0.79"
ø0.87"
ø0.91"
ø1.0"
ø0.98"
4
HES
iSpeed5
HTS
HPS
PLANET
Xpeed
ABT
5
AIR LINE KIT
6
PARTS
7
TECHNICAL DATA
8
APPLICATION EXAMPLES
INDEX

INDEX (Product Code)

Product Code	Product Name	Legacy	Page	
1003	IM-300	RO10163A	1-p33	
1004	IM-301	RO10163	1-p33	
1009	RG-01	RO10214	1-p18	
1010	RG-02	RO10228	1-p18	
1012	MFC-300S	RE10247	1-p09	
1013	MFC-300M	RE10252	1-p09	
1015	CN-01	RE10210	1-p18	
1018	AM-300RA	AS11395	3-p04	
1021	AM-300R	AS11397	3-p04	
1022	ARG-01	AS11414	2-p34	
1023	ARG-02	AS11428	2-p34	
1029	AGM-01	AS11029	6-p15	
1038	K-213	K076211	6-p12	
1043	CNA	NK11043	6-p09	
1045	NCH-01	NK11045	6-p15	
1060	K-209	AA10040	6-p11	
1061	K-208	AA10055	6-p11	
1064	AFC-45	AF10045	6-p09	
1067	TP-12	KBS1067	6-p10	
1071	AM-600R	AS11071	3-p05	
1077	KCH-02 (6.0)		6-p14	
1079	AM-310R	AS41079	3-p04	
1081	AM-310RA	AS41081	3-p05	
1082	AM-310LA	AS81082	3-p05	
1083	AM-300L	AS81083	3-p04	
1084	AM-300LA	AS81084	3-p04	
1085	AM-310L	AS81085	3-p04	
1103	TP-12A		6-p10	
1104	TPA-12A		6-p10	
1120	PR-03	T815016I	6-p10	
1122	PR-304	T815001I	1-p38	
1124	AFC-40	Z100001	6-p09	
1125	PR2-304S	Y150022I	1-p38	
1126	PR2-06		1-p38	
1144	IR-310	RE11008	1-p08	
1145	EBS-101	KBS61557	1-p26	
1146	KBS-101	KBS61065	1-p16	
1164	R301-IR	1148	1-p32	
1302	LS-100	LS10815	1-p12	
1307	ML-8	LS51307	1-p13	
1380	SLS-16	LS11380	1-p13	
1404	FC-35	EL11330	6-p09	
1424	E023011		6-p10	
1425	E037011	EO37011	6-p10	
1440	FC-40	EG11404	6-p09	
1483	NLS-110		1-p12	
1484	K-269		6-p10	
1507	ARG-011E	ASE1507	2-p66	
1508	ARG-021E	ASE1508	2-p66	
1516	ELS-100	ES11516	1-p26	
1517	ERG-01	ES11517	1-p27	
1518	ECN-011	ES11518	1-p27	
1519	Z095101		6-p09	
1544	U235406	U235406	5-p05	
1546	K-246	AS1546	6-p11	
1547	GR3.0ML		6-p11	
1548	AL-A0611		5-p04	
1549	GR100ML		6-p11	
1550	GR10ML		6-p11	
1553	ERG-01B	ES41553	1-p27	
1554	EML-8	ES51554	1-p26	
1580	NR50-5100 ATC		2-p62	
1582	NR40-5100 ATC		2-p62	
1597	EM-3060		2-p54	
1742	EMCD-3000A-8M		2-p49	
1743	EMCD-3000A-6M		2-p49	
1744	EMCD-3000A-4M		2-p49	
1748	EMCD-3000-4M		2-p49	

Product Code	Product Name	Legacy	Page	
1749	EMCD-3000-6M		2-p49	
1750	EMCD-3000-8M		2-p49	
1765	EM-3060J		2-p55	
1766	EMCD-3000J-8M		2-p45	
1767	EMCD-3000J-6M		2-p45	
1768	EMCD-3000J-4M		2-p45	
1778	EMCD-3000J-3M		2-p45	
1779	EM-3060J-2M		2-p55	
1781	EM-3080J		2-p74	
1788	EM-3080J-2M		2-p74	
1789	BMS-4020	1784	2-p81	
1790	BMS-4020RA	1785	2-p81	
1791	BMS-4040	1786	2-p81	
1792	BMS-4040RA	1787	2-p81	
1793	NRAF-5080		2-p75	
1797	AM-3020R	AS11797	3-p19	
1798	AM-3020L	AS11798	3-p19	
1799	AM-3020RA	AS11799	3-p19	
1800	AM-3020LA	AS11800	3-p19	
1801	AM-2526R	AS81801P	3-p13	
1802	AM-2526L	AS81802P	3-p13	
1803	AM-2526RA	AS81803P	3-p13	
1804	AM-2526LA	AS81804P	3-p13	
1805	AM-H2526R	AS81805P	3-p13	
1806	AM-H2526L	AS81806P	3-p13	
1807	AM-H2526RA	AS81807P	3-p13	
1808	AM-H2526LA	AS81808P	3-p13	
1822	ARG-2504N	AS81822P	2-p24	
1824	ARG-2516N	AS81824P	2-p24	
1826	ARG-H2504N	AS81826P	2-p24	
1828	ARG-H2516N	AS81828P	2-p24	
1835	NRR-2651	AS81835P	2-p23	
1836	NRR-3060		2-p63	
1854	Xpeed1200		4-p49	Call For Details
1855	Xpeed1600		4-p48	Call For Details
1856	ABT-1000		4-p52	
1871	RB-22.8x25		6-p19	
1872	RBS-22.8x25		6-p19	
1873	RB-22.8x25.4		6-p19	
1874	RBS-22.8x25.4		6-p19	
1875	RB-20x23		6-p19	
1876	RB-20x22.8		6-p19	
1877	RB-20x22		6-p19	
1878	RB-20x25		6-p19	
1879	RB-20x25.4		6-p19	
1880	RB-30x32		6-p19	
1881	RB-30x36		6-p19	
1882	SP-22x10L		2-p08	
1883	RB-22x25x34L		6-p19	
1884	RB-22x25.4x34L		6-p19	
1885	GR-30		6-p18	
1886	GR-40		6-p18	
1888	GR-22.8		6-p18	
1945	HES510-NT30M		4-p04	
1948	HES510-NT40M		4-p04	
1949	HES510-CAT40		4-p04	
1950	HES510-IT40		4-p04	
1953	HES510-NT50M		4-p05	
1954	HES510-CAT50		4-p05	
1955	HES510-IT50		4-p05	
2001	WR6X4.5	RE22001	6-p16	
2002	T-751	HR10303	6-p17	
2006	K-232	RE10389	6-p17	
2007	K-231	RE10394	6-p17	
2008	WR10X10	RA10406	6-p16	
2009	WR7X5.1	RE10207	6-p16	
2010	WR7X5.5	RE10290	6-p16	
2011	K-220	PL10622	6-p16	

Product Code	Product Name	Legacy	Page	
2012	WR8X5	RA12012	6-p16	
2013	K-212	RE22015	6-p17	
2014	K-233	RE22014	6-p17	
2016	K-248	LS22016	6-p17	
2017	K-249	LS22017	6-p17	
2018	WR20X24	RA12018	6-p16	
2020	K-207		6-p12	
2022	K-257	PL12022	6-p12	
2023	K-258	PL12023	6-p12	
2024	K-259	PL12024	6-p12	
2026	WR12X14	AS42026	6-p16	
2027	K-206	AA10426	6-p12	
2028	K-215	0911406020	6-p12	
2029	K-216	0911508010	6-p12	
2030	K-204	K155211	6-p12	
2035	K-241	AS12035	6-p13	
2036	K-242	AS12036	6-p13	
2037	K-244	AS12037	6-p13	
2038	FJ-01	AA82038	6-p13	
2039	FJ-02	AA82039	6-p13	
2040	FJ-03	AA82040	6-p13	
2041	K-237	Z101240	6-p12	
2042	K-238	T815220	6-p12	
2043	K-223		6-p12	
2045	WR22X27	RA12045	6-p16	
2046	K-236	RE82046	6-p17	
2047	WR16X18		6-p16	
2048	WR15X17		6-p16	
2049	K-221		6-p12	
2050	K-224		6-p12	
2052	K-256		6-p12	
2054	WR9X11		6-p16	
2055	WRL9		6-p17	
2056	K-247	K-247	6-p12	
2058	K-251		6-p12	
2059	K-254		6-p12	
2064	WR9X9		6-p16	
2067	PCR-30		6-p17	
2068	WR4X7		6-p17	
2069	WR6.1X8		6-p16	
2070	K-275	AA10411	6-p12	
2073	K-277		6-p17	
2080	WR36		6-p17	
2081	WRT14		6-p17	Call For Details
2082	WRT10		6-p17	Call For Details
2083	WR17X22		6-p16	
2102	CHN-A		6-p06	
2119	CHN-E	PS12119	6-p06	
2122	K-263	RA11820	6-p07	
2123	CHN-B	AS12123	6-p06	
2124	CHN-02	AS32124	6-p07	
2129	K-265	RA11900	6-p07	
2130	KCH-03 (6.0)	AS42130A	6-p14	
2131	AGM-03	AS42131	6-p15	
2132	DCH-J0K	AS42132	6-p14	
2133	KCH-01N (6.0)		6-p14	
2134	DCH-J0N	AS42134	6-p14	
2135	KCH-01A (6.0)		6-p14	
2136	DCH-J0A	AS02136	6-p14	
2137	AGM-01A	AS02137	6-p15	
2138	EGF-19	AS2138	6-p13	
2143	NGF2-19	AS42127	6-p13	
2146	KCH-02 (5.0)	AS41605	6-p14	
2147	KCH-02 (8.0)		6-p14	
2148	KCH-03 (5.0)	K301085	6-p14	
2149	KCH-03 (8.0)		6-p14	
2153	KCH-01N (5.0)	AS42133	6-p14	
2154	KCH-01N (8.0)		6-p14	

Product Code	Product Name	Legacy	Page	
2155	KCH-01A (8.0)		6-p14	
2158	K-265A		6-p07	
2159	CHN-AA		6-p06	
2160	CHN-3A		6-p07	
2161	CHN-16		6-p07	
2164	KCH-03 (6.35)	AS42130	6-p14	
2512	AM-600RA	AS12512	3-p05	
2810	HG-200	RE10188	1-p09	
2812	IG-400	2811	1-p08	
2900	IC-300	RE10182	1-p10	
2901	KC-300	RE10266	1-p10	
2902	RA-100	AS11411	2-p32	
2903	RA-200	AS11412	2-p32	
2904	BMH-300	RE10235	1-p09	
2905	NA45-400	NK45400	1-p35	
2906	NA45-230	NK45230	1-p35	
2907	NA90-230	NK90230	1-p35	
2909	NR-601	AS10073	3-p08	
2910	RA-151E	ASE1505	2-p61	
2911	RA-271E	ASE1506	2-p61	
2912	EHL-401	ES11515	1-p24	
2913	MSS-1908R	AS41601	3-p30	
2914	MSS-1908RA	AS41603	3-p30	
2915	MSS-1902R	AS41605	3-p30	
2916	MSS-1902RA	AS41607	3-p30	
2917	NR-311	AS42511	2-p33	
2918	MSST-2302R	AS41653	3-p32	
2919	MSST-2302RA	AS41655	3-p32	
2920	MSS-2208RA	AS81682	3-p31	
2921	MSS-2202R	AS81684	3-p31	
2922	MSS-2202RA	AS81686	3-p31	
2923	ERA-270	ES41551	1-p25	
2924	RAS-101	AS51094	2-p32	
2925	RAS-151E	ASE1559	2-p60	
2926	MSS-2524R	AS81690	3-p33	
2927	MSS-2506RA	AS81700	3-p33	
2928	MSSH-2524R	AS81721	3-p33	
2929	MSSH-2524RA	AS81723	3-p33	
2930	MSSH-2506RA	AS81731	3-p33	
2931	MSSH-2501RA	AS81739	3-p33	
2932	EKC-300	ES81526	1-p25	
2933	EIC-300	ES81525	1-p25	
2936	NR-403E	ASE1514	2-p59	
2937	NR-453E	ASE1566	2-p58	
2939	MSS-1930R	AS91676	3-p30	
2940	MSS-1930RA	AS91678	3-p30	
2941	MSS-2030R	AS41710	3-p30	
2942	MSS-2030RA	AS41712	3-p30	
2943	MSS-2230R	AS91710	3-p31	
2944	MSS-2230RA	AS91712	3-p31	
2955	NR-2551	AS81819P	2-p23	
2956	NR-H2551	AS81820P	2-p23	
2958	NR-2351	AS18220	2-p31	
2961	RAX-271E	ASE1579	2-p60	
2962	RAX-71E	ASE1576	2-p60	
2973	EHG-400	ES41552	1-p25	
2974	AMH-301	AS11510	2-p33	
2975	MSS-2008R	AS41609	3-p30	
2976	MSS-2008RA	AS41611	3-p30	
2977	MSS-2002R	AS41613	3-p30	
2978	MSS-2002RA	AS41615	3-p30	
2979	MSST-2330R	AS41637	3-p32	
2980	MSST-2330RA	AS41639	3-p32	
2981	MSST-2308R	AS41645	3-p32	
2982	MSST-2308RA	AS41647	3-p32	
2983	MSS-2208R	AS81680	3-p31	
2984	MSS-2524RA	AS81692	3-p33	
2985	MSS-2506R	AS81698	3-p33	

INDEX (Product Code)

Product Code	Product Name	Legacy	Page	
2986	MSS-2501R	AS81706	3-p33	
2987	MSS-2501RA	AS81708	3-p33	
2988	MSSH-2506R	AS81729	3-p33	
2989	MSSH-2501R	AS81737	3-p33	
2990	NSP-601A	NK60100	1-p34	
3737	AX-105	AS43737	6-p15	
4502	AL-M1202		5-p03	
4503	AL-M1203BS2		5-p03	
4504	AL-C1204		5-p03	
4505	AL-A1205		5-p04	
4506	AL-H1206		5-p02	
4507	AL-H1207F		5-p02	
7005	HPS250-BT30A	HPS01	4-p34	
7006	HPS250-BT30B	HPS02	4-p34	
7007	HPS250-BT30C	HPS03	4-p34	
7008	HPS250-CAT40A	HPS07	4-p35	
7009	HPS250-CAT40B	HPS08	4-p35	
7010	HPS250-CAT40C	HPS09	4-p35	
7011	HPS500-BT30A	HPS04	4-p34	
7012	HPS500-BT30B	HPS05	4-p34	
7013	HPS500-BT30C	HPS06	4-p34	
7014	HPS500-CAT40A	HPS10	4-p35	
7015	HPS500-CAT40B	HPS11	4-p35	
7016	HPS500-CAT40C	HPS12	4-p35	
7097	IH-300	RE10178	1-p08	
7182	EHR-500	ES9090	1-p24	
7339	ENK50C-HR	ES9091	1-p22	
7340	ES50C-HR	ES9085	1-p22	
7341	ENK50T-HR	ES9092	1-p22	
7342	ES50T-HR	ES9086	1-p22	
7355	PL600-M2040		4-p43	
7356	PL600-H3440		4-p43	
7358	EM-3030T-J		2-p57	
7359	EM-3030T-J-2M		2-p57	
7583	EM25-S6000	1746	2-p48	
7584	EM20-S6000	1745	2-p49	
7587	EMS-3060A	1755	2-p44	
7588	NR-3080S	1783	2-p75	
7589	EM30-S6000	1747	2-p48	
7590	NR-3060S	1583	2-p58	
7591	NR-303	AS41830	2-p31	
7593	EMS-3060K	1756	2-p44	
7596	EMR-3008K	1757	2-p45	
7601	EMA-3020K	1759	2-p50	
7605	EMA-3020S	1758	2-p50	
7611	HES810-BT30		4-p11	
7612	HES810-BT40		4-p11	
7613	HES810-NT40		4-p11	
7614	HES810-BT50		4-p12	
7615	HES810-HSK A63		4-p12	
7616	HES810-ST32		4-p13	
7617	HES510-BT50	1951	4-p05	
7618	HES510-NT50	1952	4-p05	
7619	HES510-BT40	1946	4-p04	
7620	HES510-NT40	1947	4-p04	
7621	HES510-BT30	1943	4-p04	
7622	HES510-NT30	1944	4-p04	
7623	HES510-ST32	9197	4-p06	
7624	HES510-HSK A63	1956	4-p07	
7625	HES510-HSK A100	1957	4-p07	
7626	BM-319		2-p06	
7628	BM-320		2-p06	
7633	BM-320F		2-p07	
7635	BM-322		2-p07	
7637	BM-325		2-p09	
7639	BM-322FL		2-p08	
7641	BM-322FR		2-p08	
7644	EMSF-3060K		2-p46	

Product Code	Product Name	Legacy	Page	
7651	BMJ-319		2-p10	
7652	BMJ-320		2-p10	
7653	BMJ-322		2-p11	
7654	BMJ-325		2-p11	
7655	BMF-319		2-p12	
7656	BMF-320		2-p12	
7657	BMF-322		2-p13	
7658	BMF-325		2-p13	
7683	BMS-4020 2M		2-p81	
7685	BMS-4040 2M	7684	2-p81	
7690	NR50-5100 ATC-RS		2-p62	
7702	BM-322FS		2-p09	
7714	BMS-4040-MQL		2-p84	
7715	BMS-4040-MQL-2M		2-p84	
7720	NE314		2-p21	
7721	EM-2350J		2-p30	
7722	EMCD-2350J-4M		2-p30	
7723	EMCD-2350J-6M		2-p30	
7724	EMCD-2350J-8M		2-p30	
7739	Adjuster Bolt		2-p85	
7775	US-50P Set (120V)		1-p40	
7778	NE330		1-p40	
7780	US-50P		1-p40	
8004	NCL-351C	EMX8004	6-p08	
8005	NCL-351S	EMX8005	6-p08	
8013	NCL-261C	EMX8013	6-p08	
8014	NCL-261S	EMX8014	6-p08	
8023	NCL-151C	EMX8023	6-p08	
8024	NCL-151S	EMX8024	6-p08	
8050	HH-01	EMX8050	6-p09	
8051	NCL-EXT	EMX8051	6-p08	
8060	HA-500	RE18060	1-p16	
8086	ENK-410S		1-p07	
8087	ENK-250T		1-p07	
8088	ENKCD-410S		6-p08	
8089	ENKCD-250T		6-p08	
8090	ENKCD-410C		6-p08	
8091	ENKCD-250C		6-p08	
8103	FC-24	SHE8103	6-p09	
8104	K-274		6-p09	
8106	FC-64		6-p09	
8107	K-273		6-p09	
8222	EV410-IH		1-p06	
8224	NE249 120		1-p04	
8231	EV410-IR		1-p06	
8232	EV250-IR		1-p06	
8279	HTS1501S-HSK E40		4-p28	
8280	HTS1501S-HSK E50		4-p28	
8281	HTS1501S-BT50		4-p27	
8282	HTS1501S-HSK F63		4-p29	
8283	HTS1501S-HSK E32		4-p28	
8296	HTS1501S-BT30		4-p27	
8297	HTS1501S-BT40		4-p27	
8298	HTS1501S-HSK A63		4-p29	
8299	HTS1501S-M2040		4-p29	
8300	HTS1501S-HSK E25		4-p28	
8333	EM25-5000-J4	AS88322	2-p30	
8334	EM25N-5000-J4	AS88322P	2-p22	
8346	EM-4040		2-p82	
8347	EM-4040A		2-p82	
8348	EM-4020		2-p82	
8349	EM-4020A		2-p82	
8407	E3000-PEX4		2-p42	
8472	NE246		2-p80	
8473	E4000-PB		2-p89	
8474	E4000-PEX4		2-p89	
8475	E4000-SRB		2-p89	
8478	NE273 B Type		2-p05	

Product Code	Product Name	Legacy	Page	
8490	NE273 D Type		2-p05	
8491	NE287		4-p22	
8492	NE287 HC		4-p23	
8493	BRACKET (L-Type)		4-p23	
8494	BRACKET (H-Type)		4-p23	
8533	BM3-IG		2-p08	
9046	ENKCD-401	E096B012	6-p09	
9047	ENKCD-401-3M		6-p09	
9088	ENK-500C	ES9088	1-p24	
9089	ENK-500T	ES9089	1-p24	
9093	ENKCD-50C	ES9093	6-p08	
9094	ENKCD-50T	ES9094	6-p08	
9095	ENKCD-50C 3M		6-p08	
9096	ENKCD-50T 3M		6-p08	
9148	HES510-BT30-SK	ASE9148	4-p16	
9149	HES510-BT40-SK	ASE9149	4-p16	
9150	HES510-BT50-SK	ASE9150	4-p16	
9151	HES510-HSK A100-SK	ASE9151	4-p16	
9152	HES510-HSK A63-SK	ASE9152	4-p16	
9153	HES510-NT30-SK	ASE9153	4-p16	
9154	HES510-NT30M-SK	ASE9154	4-p16	
9155	HES510-NT40-SK	ASE9155	4-p16	
9156	HES510-NT40M-SK	ASE9156	4-p16	
9157	HES510-NT50-SK	ASE9157	4-p16	
9158	HES510-NT50M-SK	ASE9158	4-p16	
9159	HES510-R8-SK	K812A271	4-p16	
9160	HES510-ST32-SK	K812A272	4-p16	
9190	HES510-IT50-SK		4-p16	
9191	HES510-IT40-SK		4-p16	
9192	HES510-CAT50-SK	ASE9192	4-p16	
9193	HES510-CAT40-SK	ASE9193	4-p16	
9196	HES510-R8		4-p06	
9201	HES810-CAT40		4-p11	
9208	NRR3060-QC		2-p65	
9209	QC3-A		2-p64	
9210	QC3-K		2-p64	
9211	QC3-ADP		2-p65	
9213	NR-4040		2-p83	
9214	NRR4040-QC		2-p87	
9215	QC5-K		2-p86	
9216	QC5-16		2-p86	
9217	QC5-K ADP		2-p87	
9218	QC5-16 ADP		2-p87	
9219	NR4040-AQC		2-p86	
9220	NR3060-AQC		2-p64	
9221	HES810-CAT50		4-p11	
9248	EMCD-810-4M		4-p09	
9249	EMCD-810-6M		4-p09	
9250	EMCD-810-8M		4-p09	
9253	EMCD-4000-2M		2-p88	
9254	EMCD-4000-4M		2-p88	
9255	EMCD-4000-6M		2-p88	
9256	EMCD-4000-8M		2-p88	
9257	EMCD-4000S-2M		2-p88	
9258	EMCD-4000S-4M		2-p88	
9259	EMCD-4000S-6M		2-p88	
9260	EMCD-4000S-8M		2-p88	
9261	EMCD-BM3-3M		2-p14	
9262	EMCD-BM3-5M		2-p14	
9263	EMCD-BM3-7M		2-p14	
9264	EMCD-BM3S-4M		2-p14	
9265	EMCD-BM3S-6M		2-p14	
9266	EMCD-BM3S-8M		2-p14	
9267	EMCD-BM3A-4M		2-p14	
9268	EMCD-BM3A-6M		2-p14	
9269	EMCD-BM3A-8M		2-p14	
9775	NE211		2-p42	
9781	NE212		2-p43	

Product Code	Product Name	Legacy	Page	
9793	NE96	ES9087	1-p21	
42423	GS100G4mm		1-p37	
60101	4mm200GFLT		1-p41	
60102	4mm320GFLT		1-p41	
60103	4mm600GFLT		1-p41	
60105	4mm200GFL		1-p41	
60106	4mm320GFL		1-p41	
60107	4mm600GFL		1-p41	
60111	4mm200GFLB		1-p41	
60112	4mm320GFLB		1-p41	
60113	4mm600GFLB		1-p41	
60115	5mm200GFLXXL		1-p41	
60116	5mm320GFLXXL		1-p41	
60117	5mm600GFLXXL		1-p41	
60151	1mm200GRD		1-p41	
60152	1mm320GRD		1-p41	
60153	1mm600GRD		1-p41	
60155	2mm200GRD		1-p41	
60156	2mm320GRD		1-p41	
60157	2mm600GRD		1-p41	
60181	3mm200GRD		1-p41	
60182	3mm320GRD		1-p41	
60183	3mm600GRD		1-p41	
60185	3mm200TRT		1-p41	
60186	3mm320TRT		1-p41	
60187	3mm600TRT		1-p41	
60191	2mm200OT		1-p41	
60192	2mm320OT		1-p41	
60193	2mm600OT		1-p41	
60231	5mm200GFLXL		1-p41	
60232	5mm320GFLXL		1-p41	
60233	5mm600GFLXL		1-p41	
60235	8mm200GFLXL		1-p41	
60236	8mm320GFLXL		1-p41	
60237	8mm600GFLXL		1-p41	
60519	60519	60735	1-p41	
60701	60701		1-p41	
60702	60702		1-p41	
60703	60703		1-p41	
60704	60704		1-p41	
60705	60705		1-p41	
60706	60706		1-p41	
60707	60707		1-p41	
60711	60711		1-p41	
60712	60712		1-p41	
60713	60713		1-p41	
60714	60714		1-p41	
60715	60715		1-p41	
60716	60716		1-p41	
60717	60717		1-p41	
60721	60721		1-p41	
60722	60722		1-p41	
60723	60723		1-p41	
60724	60724		1-p41	
60725	60725		1-p41	
60726	60726		1-p41	
60727	60727		1-p41	
60731	60731		1-p41	
60732	60732		1-p41	
60733	60733		1-p41	
60734	60734		1-p41	
60736	60736		1-p41	
60737	60737		1-p41	
60801	2mmRDBR		1-p41	
60802	3mmRDBR		1-p41	
60805	10mmX2mmX40mmRDBR		1-p41	
60901	2mmRDSFT		1-p41	
60902	3mmRDSFT		1-p41	

INDEX (Product Code)

Product Code	Product Name	Legacy	Page
60903	3.3mmRDSFT		1-p41
60904	3.2mmRDSFT		1-p41
60911	2mmRDHD		1-p41
60912	3mmRDHD		1-p41
60913	3.2mmRDHD		1-p41
60921	.8mmFLSFTHD		1-p41
60922	1mmFLSFTHD		1-p41
60923	2mmFLSFTHD		1-p41
60924	3mmFLSFTHD		1-p41
60925	3.3mmFLSFTHD		1-p41
62502	VES	LS10875	1-p14
62505	VEA	LS10834	1-p14
62506	62506	Z094007	1-p19
62507	62507	Z094006	1-p19
62508	62508	Z094005	1-p19
62509	62509	Z095008	1-p19
62510	62510		1-p14
62525	LKE-2A	LS10891	1-p14
62526	FBA-2	LS10848	1-p14
62527	NGA	LS10853	1-p14
62552	62552	LS10919	1-p19
62555	62555	LS10923	1-p19
62557	62557	LS10927	1-p19
62559	62559	LS10931	1-p19
62560	62560	LS10932	1-p19
62751	FVA	LS10867	1-p14
62814	62814	LS10918	1-p14
62840	62840	LS10963	1-p19
62871	62871	LS10922	1-p19
62961	62961		1-p41
62962	62962		1-p41
62963	62963		1-p41
62964	62964		1-p41
62965	62965		1-p41
62966	62966		1-p41
62967	62967		1-p41
63101	63101		1-p41
63102	63102		1-p41
63103	63103		1-p41
63104	63104		1-p41
63105	63105		1-p41
63106	63106		1-p41
63107	63107		1-p41
64105	64105	RE11915	1-p11
64106	64106	RE11916	1-p11
64107	64107	RE11917	1-p11
64131	S-008	LS10900	1-p11
64132	S-012	LS10902	1-p11
64133	S-018	LS10904	1-p11
64134	S-024	LS10905	1-p11
64135	S-032	LS10906	1-p11
64136	S-040	LS10908	1-p11
64137	S-060	LS10910	1-p11
64138	S-080	LS10912	1-p11
64139	S-100	LS10914	1-p11
64140	S-150	LS10915	1-p11
64151	M-008	RE11800	1-p11
64152	M-012	RE11802	1-p11
64153	M-018	RE11804	1-p11
64154	M-024	RE11805	1-p11
64155	M-032	RE11806	1-p11
64156	M-040	RE11808	1-p11
64157	M-060	RE11810	1-p11
64158	M-080	RE11812	1-p11
64159	M-100	RE11814	1-p11
64160	M-150	RE11815	1-p11
64171	L-008	RE11900	1-p11
64172	L-012	RE11902	1-p11
64173	L-018	RE11904	1-p11
64174	L-024	RE11905	1-p11
64175	L-032	RE11906	1-p11
64176	L-040	RE11908	1-p11
64177	L-060	RE11910	1-p11
64178	L-080	RE11912	1-p11
64179	L-100	RE11914	1-p11
64180	L-150	RE11925	1-p11
64821	RP20mm		1-p37
64822	RP30mm	NK11033	1-p37
64830	CWS36G20mm		1-p37
64831	CWH46G20mm		1-p37
64832	CWS80G20mm	NK06104	1-p37
64835	CWS36G30mm		1-p37
64836	CWH46G30mm	NK86A46S	1-p37
64837	CWS80G30mm	NK45800	1-p37
64838	CWH80G30mm	NK45801	1-p37
64842	FD80G30mm		1-p37
64844	FD120G30mm		1-p37
64846	FD180G30mm		1-p37
64847	FD240G30mm		1-p37
64849	FD400G30mm		1-p37
64901	BELT80G4mm		1-p17
64902	BELT120G4mm		1-p17
64903	BELT180G4mm		1-p17
64904	BELT240G4mm		1-p17
64905	BELT320G4mm		1-p17
64906	BELT400G4mm		1-p17
64911	BELT80G6mm		1-p17
64912	BELT120G6mm		1-p17
64913	BELT180G6mm		1-p17
64914	BELT240G6mm		1-p17
64915	BELT320G6mm		1-p17
64916	BELT400G6mm		1-p17
64921	BELT80G8mm		1-p17
64922	BELT120G8mm		1-p17
64923	BELT180G8mm		1-p17
64924	BELT240G8mm		1-p17
64925	BELT320G8mm		1-p17
64926	BELT400G8mm		1-p17
64927	BELT600G8mm		1-p17
64928	BELT800G8mm		1-p17
64941	BELTW80G8mm		1-p17
64942	BELTW120G8mm		1-p17
64943	BELTW240G8mm		1-p17
64971	BELTZ80G8mm		1-p17
64972	BELTZ100G8mm		1-p17
64973	BELTZ120G9mm		1-p17
65011	BELTDH80G8mm		1-p17
65012	BELTDH120G8mm		1-p17
65014	BELTDH240G8mm		1-p17
65015	BELTDH320G8mm		1-p17
65017	BELTDH600G8mm		1-p17
65021	BELTDS120G8mm		1-p17
65022	BELTDS180G8mm		1-p17
65023	BELTDS240G8mm		1-p17
65024	BELTDS320G8mm		1-p17
65025	BELTDS600G8mm		1-p17
65026	BELTDS00G8mm		1-p17
65027	BELTDS1000G8mm		1-p17
65028	BELTDS400G8mm		1-p17
65301	65301		1-p16
90016	K-253	RE10356	6-p06
90216	CH20-16	PL10641	6-p05
90316	K-252	RE10360	6-p06
90416	CHC-1.6	RE11611	6-p02
90430	CHC-3.0	RE10444	6-p02
90492	CHC-2.35	RE11593	6-p02

Product Code	Product Name	Legacy	Page	
90493	CHC-3.175	RE11606	6-p02	
90508	CHS-0.8	NK10216	6-p04	
90509	CHS-0.9		6-p04	
90510	CHS-1.0	NK10218	6-p04	
90511	CHS-1.1		6-p04	
90512	CHS-1.2		6-p04	
90513	CHS-1.3		6-p04	
90514	CHS-1.4		6-p04	
90515	CHS-1.5	NK10219	6-p04	
90516	CHS-1.6	NK10220	6-p04	
90517	CHS-1.7		6-p04	
90518	CHS-1.8		6-p04	
90519	CHS-1.9		6-p04	
90520	CHS-2.0	NK10221	6-p04	
90521	CHS-2.1		6-p04	
90522	CHS-2.2		6-p04	
90523	CHS-2.3		6-p04	
90524	CHS-2.4	NK10224	6-p04	
90525	CHS-2.5	NK10222	6-p04	
90526	CHS-2.6		6-p04	
90527	CHS-2.7		6-p04	
90528	CHS-2.8		6-p04	
90529	CHS-2.9	NK10209	6-p04	
90530	CHS-3.0	NK10223	6-p04	
90592	CHS-2.35	NK10215	6-p04	
90593	CHS-3.175	NK10210	6-p04	
90610	CHH-1.0	RE11729	6-p02	
90615	CHH-1.5		6-p02	
90616	CHH-1.6	RE11659	6-p02	
90620	CHH-2.0	RE11734	6-p02	
90625	CHH-2.5		6-p02	
90630	CHH-3.0	RE11739	6-p02	
90692	CHH-2.35	RE11625	6-p02	
90693	CHH-3.175	RE11630	6-p02	
90720	CHP-2.0	AS72115	6-p04	
90730	CHP-3.0	AS72116	6-p04	
90793	CHP-3.175	AS72117	6-p04	
90830	CH6-3.0		6-p05	
90893	CH6-3.175		6-p05	
90910	CHM-1.0	RE11605	6-p04	
90916	CHM-1.6	RE11600	6-p04	
90920	CHM-2.0	RE11609	6-p04	
90930	CHM-3.0	RE10459	6-p04	
90992	CHM-2.35	RE11602	6-p04	
90993	CHM-3.175	RE11604	6-p04	
91008	CH8-0.8	PL11539	6-p05	
91009	CH8-0.9		6-p05	
91010	CH8-1.0	PL11540	6-p05	
91011	CH8-1.1	PL11531	6-p05	
91012	CH8-1.2	PL11536	6-p05	
91013	CH8-1.3	PL11533	6-p05	
91014	CH8-1.4	PL11555	6-p05	
91015	CH8-1.5	PL11556	6-p05	
91016	CH8-1.6	PL11517	6-p05	
91017	CH8-1.7	PL11568	6-p05	
91018	CH8-1.8	PL11569	6-p05	
91019	CH8-1.9		6-p05	
91020	CH8-2.0	PL11574	6-p05	
91021	CH8-2.1		6-p05	
91022	CH8-2.2	PL11532	6-p05	
91023	CH8-2.3		6-p05	
91024	CH8-2.4	PL11522	6-p05	
91025	CH8-2.5	PL11523	6-p05	
91026	CH8-2.6	PL11525	6-p05	
91027	CH8-2.7		6-p05	
91028	CH8-2.8	PL11578	6-p05	
91029	CH8-2.9		6-p05	
91030	CH8-3.0	PL11588	6-p05	

Product Code	Product Name	Legacy	Page	
91092	CH8-2.35	PL11521	6-p05	
91093	CH8-3.175	PL10637	6-p05	
91110	CHG-1.0	RA11777	6-p02	
91115	CHG-1.5	RA11778	6-p02	
91116	CHG-1.6	RA11766	6-p02	
91120	CHG-2.0	RA11780	6-p02	
91125	CHG-2.5	RA11781	6-p02	
91130	CHG-3.0	RA11772	6-p02	
91140	CHG-4.0	RA11697	6-p02	
91150	CHG-5.0	RA11709	6-p02	
91160	CHG-6.0	RA11773	6-p02	
91192	CHG-2.35	RA11771	6-p02	
91193	CHG-3.175	RA11452	6-p02	
91194	CHG-4.76	RA11698	6-p02	
91196	CHG-6.35	RA11714	6-p02	
91203	CH5-0.3		6-p05	
91204	CH5-0.4		6-p05	
91205	CH5-0.5		6-p05	
91206	CH5-0.6	PL11464	6-p05	
91207	CH5-0.7	PL11465	6-p05	
91208	CH5-0.8	PL11467	6-p05	
91209	CH5-0.9	PL11468	6-p05	
91210	CH5-1.0	PL11488	6-p05	
91211	CH5-1.1	PL11469	6-p05	
91212	CH5-1.2	PL11470	6-p05	
91213	CH5-1.3		6-p05	
91214	CH5-1.4		6-p05	
91215	CH5-1.5	PL11494	6-p05	
91216	CH5-1.6	PL11495	6-p05	
91217	CH5-1.7		6-p05	
91218	CH5-1.8	PL11498	6-p05	
91219	CH5-1.9		6-p05	
91220	CH5-2.0	PL11489	6-p05	
91221	CH5-2.1		6-p05	
91222	CH5-2.2	PL11492	6-p05	
91223	CH5-2.3		6-p05	
91224	CH5-2.4		6-p05	
91225	CH5-2.5	PL10672	6-p05	
91226	CH5-2.6		6-p05	
91227	CH5-2.7	PL10683	6-p05	
91228	CH5-2.8	PL10670	6-p05	
91229	CH5-2.9		6-p05	
91230	CH5-3.0	PL11490	6-p05	
91231	CH5-3.1		6-p05	
91232	CH5-3.2		6-p05	
91233	CH5-3.3		6-p05	
91234	CH5-3.4	PL10671	6-p05	
91235	CH5-3.5	PL10673	6-p05	
91236	CH5-3.6	PL10674	6-p05	
91237	CH5-3.7	PL10682	6-p05	
91238	CH5-3.8		6-p05	
91239	CH5-3.9		6-p05	
91240	CH5-4.0	PL10677	6-p05	
91241	CH5-4.1		6-p05	
91242	CH5-4.2		6-p05	
91243	CH5-4.3	PL10681	6-p05	
91244	CH5-4.4	PL10679	6-p05	
91245	CH5-4.5	PL10678	6-p05	
91246	CH5-4.6		6-p05	
91247	CH5-4.7		6-p05	
91248	CH5-4.8		6-p05	
91249	CH5-4.9		6-p05	
91250	CH5-5.0	PL10676	6-p05	
91251	CH5-5.1		6-p05	
91252	CH5-5.2		6-p05	
91253	CH5-5.3		6-p05	
91254	CH5-5.4		6-p05	
91255	CH5-5.5		6-p05	

1
EmaxEVO
ESPERT
ROTUS
IMPULSE
PRESTO II
Sheenus ZERO
2
iSpeed3
E2000 ø1.0"/ø0.98"/ø0.897"
E3000 – One Piece
E3000 – Modular
ø1.18"
ø1.0"/ø0.98" ø0.897"
E3000 – 80.000rpm
E4000
3
MA
ø0.897"
ø1.0" ø0.98"
ø1.18"
MS
ø0.75" ø0.79"
ø0.87" ø0.91"
ø1.0" ø0.98"
4
HES
iSpeed5
HTS
HPS
PLANET
Xpeed
ABT
5
AIR LINE KIT
6
PARTS
7
TECHNICAL DATA
8
APPLICATION EXAMPLES
INDEX

INDEX (Product Code)

Product Code	Product Name	Legacy	Page	
91256	CH5-5.6		6-p05	
91257	CH5-5.7		6-p05	
91258	CH5-5.8		6-p05	
91259	CH5-5.9		6-p05	
91260	CH5-6.0	PL11502	6-p05	
91292	CH5-2.35		6-p05	
91293	CH5-3.175	PL11466	6-p05	
91294	CH5-4.76		6-p05	
91296	CH5-6.35	PL10675	6-p05	
91405	CHA-0.5		6-p02	
91406	CHA-0.6		6-p02	
91407	CHA-0.7		6-p02	
91408	CHA-0.8	RA11805	6-p02	
91409	CHA-0.9	RA11804	6-p02	
91410	CHA-1.0	RA11806	6-p02	
91411	CHA-1.1	RA11807	6-p02	
91412	CHA-1.2	RA11808	6-p02	
91413	CHA-1.3	RA11803	6-p02	
91414	CHA-1.4	RA11815	6-p02	
91415	CHA-1.5	RA11814	6-p02	
91416	CHA-1.6	RA11809	6-p02	
91417	CHA-1.7		6-p02	
91418	CHA-1.8	RA11810	6-p02	
91419	CHA-1.9	RA11822	6-p02	
91420	CHA-2.0	RA11811	6-p02	
91421	CHA-2.1	RA11831	6-p02	
91422	CHA-2.2		6-p02	
91423	CHA-2.3		6-p02	
91424	CHA-2.4	RA11824	6-p02	
91425	CHA-2.5	RA11821	6-p02	
91426	CHA-2.6	RA11826	6-p02	
91427	CHA-2.7		6-p02	
91428	CHA-2.8	RA11828	6-p02	
91429	CHA-2.9	RA11829	6-p02	
91430	CHA-3.0	RA11813	6-p02	
91431	CHA-3.1	RA11830	6-p02	
91432	CHA-3.2		6-p02	
91433	CHA-3.3		6-p02	
91434	CHA-3.4		6-p02	
91435	CHA-3.5	RA11823	6-p02	
91436	CHA-3.6		6-p02	
91437	CHA-3.7		6-p02	
91438	CHA-3.8		6-p02	
91439	CHA-3.9		6-p02	
91440	CHA-4.0	RA11819	6-p02	
91492	CHA-2.35	RA11812	6-p02	
91493	CHA-3.175	RA11818	6-p02	
91494	CHA-3.0AA		6-p02	
91495	CHA-4.0AA		6-p02	
91496	CHA-3.175AA		6-p02	
91505	CHK-0.5	PL42665	6-p03	
91506	CHK-0.6		6-p03	
91507	CHK-0.7	PL42667	6-p03	
91508	CHK-0.8	PL42668	6-p03	
91509	CHK-0.9	PL42692	6-p03	
91510	CHK-1.0	PL42691	6-p03	
91511	CHK-1.1	PL42699	6-p03	
91512	CHK-1.2	PL42682	6-p03	
91513	CHK-1.3	PL42693	6-p03	
91514	CHK-1.4	PL42700	6-p03	
91515	CHK-1.5	PL42695	6-p03	
91516	CHK-1.6	PL42696	6-p03	
91517	CHK-1.7	PL42709	6-p03	
91518	CHK-1.8	PL42698	6-p03	
91519	CHK-1.9		6-p03	
91520	CHK-2.0	PL42672	6-p03	
91521	CHK-2.1	PL42681	6-p03	
91522	CHK-2.2	PL42662	6-p03	

Product Code	Product Name	Legacy	Page	
91523	CHK-2.3		6-p03	
91524	CHK-2.4	PL42710	6-p03	
91525	CHK-2.5	PL42663	6-p03	
91526	CHK-2.6	PL42712	6-p03	
91527	CHK-2.7	PL42617	6-p03	
91528	CHK-2.8	PL42694	6-p03	
91529	CHK-2.9	PL42689	6-p03	
91530	CHK-3.0	PL42669	6-p03	
91531	CHK-3.1	PL42670	6-p03	
91532	CHK-3.2		6-p03	
91533	CHK-3.3	PL42705	6-p03	
91534	CHK-3.4	PL42701	6-p03	
91535	CHK-3.5	PL42707	6-p03	
91536	CHK-3.6	PL42706	6-p03	
91537	CHK-3.7		6-p03	
91538	CHK-3.8	PL42702	6-p03	
91539	CHK-3.9		6-p03	
91540	CHK-4.0	PL42678	6-p03	
91541	CHK-4.1	PL42711	6-p03	
91542	CHK-4.2		6-p03	
91543	CHK-4.3	PL42671	6-p03	
91544	CHK-4.4	PL42673	6-p03	
91545	CHK-4.5	PL42687	6-p03	
91546	CHK-4.6		6-p03	
91547	CHK-4.7	PL42674	6-p03	
91548	CHK-4.8		6-p03	
91549	CHK-4.9		6-p03	
91550	CHK-5.0	PL42676	6-p03	
91551	CHK-5.1	PL42677	6-p03	
91552	CHK-5.2	PL42708	6-p03	
91553	CHK-5.3		6-p03	
91554	CHK-5.4	PL42703	6-p03	
91555	CHK-5.5	PL42704	6-p03	
91556	CHK-5.6	PL42679	6-p03	
91557	CHK-5.7		6-p03	
91558	CHK-5.8		6-p03	
91559	CHK-5.9	PL42697	6-p03	
91560	CHK-6.0	PL42686	6-p03	
91592	CHK-2.35	PL42690	6-p03	
91593	CHK-3.175	PL42685	6-p03	
91594	CHK-4.76	PL42680	6-p03	
91596	CHK-6.35	PL42675	6-p03	
91597	CHK-3.0AA		6-p03	
91598	CHK-3.175AA		6-p03	
91599	CHK-4.0AA		6-p03	
91600	CHK-6.0AA		6-p03	
91601	CHK-6.35AA		6-p03	
91730	CHF-3.0		6-p02	
91793	CHF-3.175		6-p02	
91920	CHR-2.0		6-p04	
91930	CHR-3.0		6-p04	
91940	CHR-4.0		6-p04	
91960	CHR-6.0		6-p04	
91993	CHR-3.175		6-p04	
91996	CHR-6.35		6-p04	
92030	NKM6-2.35		6-p06	
92092	NKM6-3.0		6-p06	
92093	NKM6-3.175		6-p06	
92820	CHB-2.0		6-p02	
92830	CHB-3.0		6-p02	
92840	CHB-4.0		6-p02	
92893	CHB-3.175		6-p02	
93010	CHSS-1.0		6-p04	
93015	CHSS-1.5		6-p04	
93020	CHSS-2.0		6-p04	
93025	CHSS-2.5		6-p04	
93030	CHSS-3.0		6-p04	
93092	CHSS-2.35		6-p04	

Product Code	Product Name	Legacy	Page	
93093	CHSS-3.175		6-p04	
93100	CH16-10.0		6-p05	
93130	CH16-3.0		6-p05	
93140	CH16-4.0		6-p05	
93160	CH16-6.0		6-p05	
93180	CH16-8.0		6-p05	
93193	CH16-3.175		6-p05	
93196	CH16-6.35		6-p05	
93201	CHR-3.0 RS		6-p04	
93202	CHR-3.175 RS		6-p04	
93203	CHR-4.0 RS		6-p04	
93204	CHR-6.0 RS		6-p04	
93205	CHR-6.35 RS		6-p04	
93330	CH16OH-3.0		6-p04	
93331	CH16OH-3.175		6-p04	
93340	CH16OH-4.0		6-p04	
93350	CH16OH-5.0		6-p04	
93360	CH16OH-6.0		6-p04	
93363	CH16OH-6.35		6-p04	
93370	CH16OH-7.0		6-p04	
93380	CH16OH-8.0		6-p04	
93390	CH16OH-9.0		6-p04	
93400	CH16OH-10.0		6-p04	
500101	SB-1		4-p23	
500102	SB-2		4-p23	
500103	SB-3		4-p23	
500104	SB-4		4-p23	
506001	5ATC60-CAT40		4-p20	
506002	5ATC60-BT40		4-p20	
506003	5ATC60-CAT50		4-p20	
506004	5ATC60-BT50		4-p20	
506005	5ATC60-HSK63A		4-p21	
506006	5ATC60-HSK100A		4-p21	
508001	5ATC80-CAT40		4-p20	
508002	5ATC80-BT40		4-p20	
508003	5ATC80-CAT50		4-p20	
508004	5ATC80-BT50		4-p20	
508005	5ATC80-HSK63A		4-p21	
508006	5ATC80-HSK100A		4-p21	
60000518	60000518		6-p17	Call For Details
AA10478C	K-211		6-p11	
AA10480C	K-202		6-p11	
AS02135	KCH-01A (5.0)		6-p14	
BLC1	GB30		4-p36	
BLC2	GB40		4-p36	
BLC3	SBHS		4-p36	
BLC4	SBFS		4-p36	
DB15M	DB15M		2-p14	
DB25M	DB25M		2-p14	
E304052	E304052		6-p13	
ISE30A	5ATC-PS		4-p23	
K1049101	SLR		6-p11	
K137A251	GN		6-p11	

1
EmaxEVO
ESPERT
ROTUS
IMPULSE
PRESTO II
Sheenus ZERO
2
iSpeed3
E2000
ø1.0"/ø0.98"/ø0.897"
E3000
– One Piece
E3000
– Modular
ø1.18"
ø1.0"/ø0.98"
ø0.897"
E3000
– 80,000rpm
E4000
3
MA
ø0.897"
ø1.0"
ø0.98"
ø1.18"
MS
ø0.75"
ø0.79"
ø0.87"
ø0.91"
ø1.0"
ø0.98"
4
HES
iSpeed5
HTS
HPS
PLANET
Xpeed
ABT
5
AIR LINE KIT
6
PARTS
7
TECHNICAL DATA
8
APPLICATION EXAMPLES
INDEX

INDEX

Product Name ▶

1
EmaxEVO
ESPERT
ROTUS
IMPULSE
PRESTO II
Sheenus ZERO
2
iSpeed3
E2000
ø1.0"/ø0.98"/ø0.897"
E3000
– One Piece
E3000
– Modular
ø1.18"
ø1.0"/ø0.98"
ø0.897"
E3000
– 80.000rpm
E4000
3
MA
ø0.897"
ø1.0"
ø0.98"
ø1.18"
MS
ø0.75"
ø0.79"
ø0.87"
ø0.91"
ø1.0"
ø0.98"
4
HES
iSpeed5
HTS
HPS
PLANET
Xpeed
ABT
5
AIR LINE KIT
6
PARTS
7
TECHNICAL DATA
8
APPLICATION EXAMPLES
INDEX

INDEX (Product Name)

Product Name	Product Code	Legacy	Page	
60519	60519	60735	1-p41	
60701	60701		1-p41	
60702	60702		1-p41	
60703	60703		1-p41	
60704	60704		1-p41	
60705	60705		1-p41	
60706	60706		1-p41	
60707	60707		1-p41	
60711	60711		1-p41	
60712	60712		1-p41	
60713	60713		1-p41	
60714	60714		1-p41	
60715	60715		1-p41	
60716	60716		1-p41	
60717	60717		1-p41	
60721	60721		1-p41	
60722	60722		1-p41	
60723	60723		1-p41	
60724	60724		1-p41	
60725	60725		1-p41	
60726	60726		1-p41	
60727	60727		1-p41	
60731	60731		1-p41	
60732	60732		1-p41	
60733	60733		1-p41	
60734	60734		1-p41	
60736	60736		1-p41	
60737	60737		1-p41	
62506	62506	Z094007	1-p19	
62507	62507	Z094006	1-p19	
62508	62508	Z094005	1-p19	
62509	62509	Z095008	1-p19	
62510	62510		1-p14	
62552	62552	LS10919	1-p19	
62555	62555	LS10923	1-p19	
62557	62557	LS10927	1-p19	
62559	62559	LS10931	1-p19	
62560	62560	LS10932	1-p19	
62814	62814	LS10918	1-p14	
62840	62840	LS10963	1-p19	
62871	62871	LS10922	1-p19	
62961	62961		1-p41	
62962	62962		1-p41	
62963	62963		1-p41	
62964	62964		1-p41	
62965	62965		1-p41	
62966	62966		1-p41	
62967	62967		1-p41	
63101	63101		1-p41	
63102	63102		1-p41	
63103	63103		1-p41	
63104	63104		1-p41	
63105	63105		1-p41	
63106	63106		1-p41	
63107	63107		1-p41	
64105	64105	RE11915	1-p11	
64106	64106	RE11916	1-p11	
64107	64107	RE11917	1-p11	
65301	65301		1-p16	
60000518	60000518		6-p17	Call For Details
.8mmFLSFTHD	60921		1-p41	
10mmX2mmX40mmRDBR	60805		1-p41	
1mm200GRD	60151		1-p41	
1mm320GRD	60152		1-p41	
1mm600GRD	60153		1-p41	
1mmFLSFTHD	60922		1-p41	
2mm200GRD	60155		1-p41	
2mm200OT	60191		1-p41	

Product Name	Product Code	Legacy	Page	Price
2mm320GRD	60156		1-p41	
2mm320OT	60192		1-p41	
2mm600GRD	60157		1-p41	
2mm600OT	60193		1-p41	
2mmFLSFTHD	60923		1-p41	
2mmRDBR	60801		1-p41	
2mmRDHD	60911		1-p41	
2mmRDSFT	60901		1-p41	
3.2mmRDHD	60913		1-p41	
3.2mmRDSFT	60904		1-p41	
3.3mmFLSFTHD	60925		1-p41	
3.3mmRDSFT	60903		1-p41	
3mm200GRD	60181		1-p41	
3mm200TRT	60185		1-p41	
3mm320GRD	60182		1-p41	
3mm320TRT	60186		1-p41	
3mm600GRD	60183		1-p41	
3mm600TRT	60187		1-p41	
3mmFLSFTHD	60924		1-p41	
3mmRDBR	60802		1-p41	
3mmRDHD	60912		1-p41	
3mmRDSFT	60902		1-p41	
4mm200GFL	60105		1-p41	
4mm200GFLB	60111		1-p41	
4mm200GFLT	60101		1-p41	
4mm320GFL	60106		1-p41	
4mm320GFLB	60112		1-p41	
4mm320GFLT	60102		1-p41	
4mm600GFL	60107		1-p41	
4mm600GFLB	60113		1-p41	
4mm600GFLT	60103		1-p41	
5ATC60-BT40	506002		4-p20	
5ATC60-BT50	506004		4-p20	
5ATC60-CAT40	506001		4-p20	
5ATC60-CAT50	506003		4-p20	
5ATC60-HSK100A	506006		4-p21	
5ATC60-HSK63A	506005		4-p21	
5ATC80-BT40	508002		4-p20	
5ATC80-BT50	508004		4-p20	
5ATC80-CAT40	508001		4-p20	
5ATC80-CAT50	508003		4-p20	
5ATC80-HSK100A	508006		4-p21	
5ATC80-HSK63A	508005		4-p21	
5ATC-PS	ISE30A		4-p23	
5mm200GFLXL	60231		1-p41	
5mm200GFLXXL	60115		1-p41	
5mm320GFLXL	60232		1-p41	
5mm320GFLXXL	60116		1-p41	
5mm600GFLXL	60233		1-p41	
5mm600GFLXXL	60117		1-p41	
8mm200GFLXL	60235		1-p41	
8mm320GFLXL	60236		1-p41	
8mm600GFLXL	60237		1-p41	
ABT-1000	1856		4-p52	
Adjuster Bolt	7739		2-p85	
AFC-40	1124	Z100001	6-p09	
AFC-45	1064	AF10045	6-p09	
AGM-01	1029	AS11029	6-p15	
AGM-01A	2137	AS02137	6-p15	
AGM-03	2131	AS42131	6-p15	
AL-A0611	1548		5-p04	
AL-A1205	4505		5-p04	
AL-C1204	4504		5-p03	
AL-H1206	4506		5-p02	
AL-H1207F	4507		5-p02	
AL-M1202	4502		5-p03	
AL-M1203BS2	4503		5-p03	
AM-2526L	1802	AS81802P	3-p13	

Product Name	Product Code	Legacy	Page	
AM-2526LA	1804	AS81804P	3-p13	
AM-2526R	1801	AS81801P	3-p13	
AM-2526RA	1803	AS81803P	3-p13	
AM-300L	1083	AS81083	3-p04	
AM-300LA	1084	AS81084	3-p04	
AM-300R	1021	AS11397	3-p04	
AM-300RA	1018	AS11395	3-p04	
AM-3020L	1798	AS11798	3-p19	
AM-3020LA	1800	AS11800	3-p19	
AM-3020R	1797	AS11797	3-p19	
AM-3020RA	1799	AS11799	3-p19	
AM-310L	1085	AS81085	3-p04	
AM-310LA	1082	AS81082	3-p05	
AM-310R	1079	AS41079	3-p04	
AM-310RA	1081	AS41081	3-p05	
AM-600R	1071	AS11071	3-p05	
AM-600RA	2512	AS12512	3-p05	
AM-H2526L	1806	AS81806P	3-p13	
AM-H2526LA	1808	AS81808P	3-p13	
AM-H2526R	1805	AS81805P	3-p13	
AM-H2526RA	1807	AS81807P	3-p13	
AMH-301	2974	AS11510	2-p33	
ARG-01	1022	AS11414	2-p34	
ARG-011E	1507	ASE1507	2-p66	
ARG-02	1023	AS11428	2-p34	
ARG-021E	1508	ASE1508	2-p66	
ARG-2504N	1822	AS81822P	2-p24	
ARG-2516N	1824	AS81824P	2-p24	
ARG-H2504N	1826	AS81826P	2-p24	
ARG-H2516N	1828	AS81828P	2-p24	
AX-105	3737	AS43737	6-p15	
BELT120G4mm	64902		1-p17	
BELT120G6mm	64912		1-p17	
BELT120G8mm	64922		1-p17	
BELT180G4mm	64903		1-p17	
BELT180G6mm	64913		1-p17	
BELT180G8mm	64923		1-p17	
BELT240G4mm	64904		1-p17	
BELT240G6mm	64914		1-p17	
BELT240G8mm	64924		1-p17	
BELT320G4mm	64905		1-p17	
BELT320G6mm	64915		1-p17	
BELT320G8mm	64925		1-p17	
BELT400G4mm	64906		1-p17	
BELT400G6mm	64916		1-p17	
BELT400G8mm	64926		1-p17	
BELT600G8mm	64927		1-p17	
BELT800G8mm	64928		1-p17	
BELT80G4mm	64901		1-p17	
BELT80G6mm	64911		1-p17	
BELT80G8mm	64921		1-p17	
BELTDH120G8mm	65012		1-p17	
BELTDH240G8mm	65014		1-p17	
BELTDH320G8mm	65015		1-p17	
BELTDH600G8mm	65017		1-p17	
BELTDH80G8mm	65011		1-p17	
BELTDS00G8mm	65026		1-p17	
BELTDS1000G8mm	65027		1-p17	
BELTDS120G8mm	65021		1-p17	
BELTDS180G8mm	65022		1-p17	
BELTDS240G8mm	65023		1-p17	
BELTDS320G8mm	65024		1-p17	
BELTDS400G8mm	65028		1-p17	
BELTDS600G8mm	65025		1-p17	
BELTW120G8mm	64942		1-p17	
BELTW240G8mm	64943		1-p17	
BELTW80G8mm	64941		1-p17	
BELTZ100G8mm	64972		1-p17	

Product Name	Product Code	Legacy	Page	
BELTZ120G9mm	64973		1-p17	
BELTZ80G8mm	64971		1-p17	
BM-319	7626		2-p06	
BM-320	7628		2-p06	
BM-320F	7633		2-p07	
BM-322	7635		2-p07	
BM-322FL	7639		2-p08	
BM-322FR	7641		2-p08	
BM-322FS	7702		2-p09	
BM-325	7637		2-p09	
BM3-IG	8533		2-p08	
BMF-319	7655		2-p12	
BMF-320	7656		2-p12	
BMF-322	7657		2-p13	
BMF-325	7658		2-p13	
BMH-300	2904	RE10235	1-p09	
BMJ-319	7651		2-p10	
BMJ-320	7652		2-p10	
BMJ-322	7653		2-p11	
BMJ-325	7654		2-p11	
BMS-4020	1789	1784	2-p81	
BMS-4020 2M	7683		2-p81	
BMS-4020RA	1790	1785	2-p81	
BMS-4040	1791	1786	2-p81	
BMS-4040 2M	7685	7684	2-p81	
BMS-4040-MQL	7714		2-p84	
BMS-4040-MQL-2M	7715		2-p84	
BMS-4040RA	1792	1787	2-p81	
BRACKET (H-Type)	8494		4-p23	
BRACKET (L-Type)	8493		4-p23	
CH16-10.0	93100		6-p05	
CH16-3.0	93130		6-p05	
CH16-3.175	93193		6-p05	
CH16-4.0	93140		6-p05	
CH16-6.0	93160		6-p05	
CH16-6.35	93196		6-p05	
CH16-8.0	93180		6-p05	
CH16OH-10.0	93400		6-p04	
CH16OH-3.0	93330		6-p04	
CH16OH-3.175	93331		6-p04	
CH16OH-4.0	93340		6-p04	
CH16OH-5.0	93350		6-p04	
CH16OH-6.0	93360		6-p04	
CH16OH-6.35	93363		6-p04	
CH16OH-7.0	93370		6-p04	
CH16OH-8.0	93380		6-p04	
CH16OH-9.0	93390		6-p04	
CH20-16	90216	PL10641	6-p05	
CH5-0.3	91203		6-p05	
CH5-0.4	91204		6-p05	
CH5-0.5	91205		6-p05	
CH5-0.6	91206	PL11464	6-p05	
CH5-0.7	91207	PL11465	6-p05	
CH5-0.8	91208	PL11467	6-p05	
CH5-0.9	91209	PL11468	6-p05	
CH5-1.0	91210	PL11488	6-p05	
CH5-1.1	91211	PL11469	6-p05	
CH5-1.2	91212	PL11470	6-p05	
CH5-1.3	91213		6-p05	
CH5-1.4	91214		6-p05	
CH5-1.5	91215	PL11494	6-p05	
CH5-1.6	91216	PL11495	6-p05	
CH5-1.7	91217		6-p05	
CH5-1.8	91218	PL11498	6-p05	
CH5-1.9	91219		6-p05	
CH5-2.0	91220	PL11489	6-p05	
CH5-2.1	91221		6-p05	
CH5-2.2	91222	PL11492	6-p05	

INDEX (Product Name)

Product Name	Product Code	Legacy	Page	
CH5-2.3	91223		6-p05	
CH5-2.35	91292		6-p05	
CH5-2.4	91224		6-p05	
CH5-2.5	91225	PL10672	6-p05	
CH5-2.6	91226		6-p05	
CH5-2.7	91227	PL10683	6-p05	
CH5-2.8	91228	PL10670	6-p05	
CH5-2.9	91229		6-p05	
CH5-3.0	91230	PL11490	6-p05	
CH5-3.1	91231		6-p05	
CH5-3.175	91293	PL11466	6-p05	
CH5-3.2	91232		6-p05	
CH5-3.3	91233		6-p05	
CH5-3.4	91234	PL10671	6-p05	
CH5-3.5	91235	PL10673	6-p05	
CH5-3.6	91236	PL10674	6-p05	
CH5-3.7	91237	PL10682	6-p05	
CH5-3.8	91238		6-p05	
CH5-3.9	91239		6-p05	
CH5-4.0	91240	PL10677	6-p05	
CH5-4.1	91241		6-p05	
CH5-4.2	91242		6-p05	
CH5-4.3	91243	PL10681	6-p05	
CH5-4.4	91244	PL10679	6-p05	
CH5-4.5	91245	PL10678	6-p05	
CH5-4.6	91246		6-p05	
CH5-4.7	91247		6-p05	
CH5-4.76	91294		6-p05	
CH5-4.8	91248		6-p05	
CH5-4.9	91249		6-p05	
CH5-5.0	91250	PL10676	6-p05	
CH5-5.1	91251		6-p05	
CH5-5.2	91252		6-p05	
CH5-5.3	91253		6-p05	
CH5-5.4	91254		6-p05	
CH5-5.5	91255		6-p05	
CH5-5.6	91256		6-p05	
CH5-5.7	91257		6-p05	
CH5-5.8	91258		6-p05	
CH5-5.9	91259		6-p05	
CH5-6.0	91260	PL11502	6-p05	
CH5-6.35	91296	PL10675	6-p05	
CH6-3.0	90830		6-p05	
CH6-3.175	90893		6-p05	
CH8-0.8	91008	PL11539	6-p05	
CH8-0.9	91009		6-p05	
CH8-1.0	91010	PL11540	6-p05	
CH8-1.1	91011	PL11531	6-p05	
CH8-1.2	91012	PL11536	6-p05	
CH8-1.3	91013	PL11533	6-p05	
CH8-1.4	91014	PL11555	6-p05	
CH8-1.5	91015	PL11556	6-p05	
CH8-1.6	91016	PL11517	6-p05	
CH8-1.7	91017	PL11568	6-p05	
CH8-1.8	91018	PL11569	6-p05	
CH8-1.9	91019		6-p05	
CH8-2.0	91020	PL11574	6-p05	
CH8-2.1	91021		6-p05	
CH8-2.2	91022	PL11532	6-p05	
CH8-2.3	91023		6-p05	
CH8-2.35	91092	PL11521	6-p05	
CH8-2.4	91024	PL11522	6-p05	
CH8-2.5	91025	PL11523	6-p05	
CH8-2.6	91026	PL11525	6-p05	
CH8-2.7	91027		6-p05	
CH8-2.8	91028	PL11578	6-p05	
CH8-2.9	91029		6-p05	
CH8-3.0	91030	PL11588	6-p05	
CH8-3.175	91093	PL10637	6-p05	
CHA-0.5	91405		6-p02	
CHA-0.6	91406		6-p02	
CHA-0.7	91407		6-p02	
CHA-0.8	91408	RA11805	6-p02	
CHA-0.9	91409	RA11804	6-p02	
CHA-1.0	91410	RA11806	6-p02	
CHA-1.1	91411	RA11807	6-p02	
CHA-1.2	91412	RA11808	6-p02	
CHA-1.3	91413	RA11803	6-p02	
CHA-1.4	91414	RA11815	6-p02	
CHA-1.5	91415	RA11814	6-p02	
CHA-1.6	91416	RA11809	6-p02	
CHA-1.7	91417		6-p02	
CHA-1.8	91418	RA11810	6-p02	
CHA-1.9	91419	RA11822	6-p02	
CHA-2.0	91420	RA11811	6-p02	
CHA-2.1	91421	RA11831	6-p02	
CHA-2.2	91422		6-p02	
CHA-2.3	91423		6-p02	
CHA-2.35	91492	RA11812	6-p02	
CHA-2.4	91424	RA11824	6-p02	
CHA-2.5	91425	RA11821	6-p02	
CHA-2.6	91426	RA11826	6-p02	
CHA-2.7	91427		6-p02	
CHA-2.8	91428	RA11828	6-p02	
CHA-2.9	91429	RA11829	6-p02	
CHA-3.0	91430	RA11813	6-p02	
CHA-3.0AA	91494		6-p02	
CHA-3.1	91431	RA11830	6-p02	
CHA-3.175	91493	RA11818	6-p02	
CHA-3.175AA	91496		6-p02	
CHA-3.2	91432		6-p02	
CHA-3.3	91433		6-p02	
CHA-3.4	91434		6-p02	
CHA-3.5	91435	RA11823	6-p02	
CHA-3.6	91436		6-p02	
CHA-3.7	91437		6-p02	
CHA-3.8	91438		6-p02	
CHA-3.9	91439		6-p02	
CHA-4.0	91440	RA11819	6-p02	
CHA-4.0AA	91495		6-p02	
CHB-2.0	92820		6-p02	
CHB-3.0	92830		6-p02	
CHB-3.175	92893		6-p02	
CHB-4.0	92840		6-p02	
CHC-1.6	90416	RE11611	6-p02	
CHC-2.35	90492	RE11593	6-p02	
CHC-3.0	90430	RE10444	6-p02	
CHC-3.175	90493	RE11606	6-p02	
CHF-3.0	91730		6-p02	
CHF-3.175	91793		6-p02	
CHG-1.0	91110	RA11777	6-p02	
CHG-1.5	91115	RA11778	6-p02	
CHG-1.6	91116	RA11766	6-p02	
CHG-2.0	91120	RA11780	6-p02	
CHG-2.35	91192	RA11771	6-p02	
CHG-2.5	91125	RA11781	6-p02	
CHG-3.0	91130	RA11772	6-p02	
CHG-3.175	91193	RA11452	6-p02	
CHG-4.0	91140	RA11697	6-p02	
CHG-4.76	91194	RA11698	6-p02	
CHG-5.0	91150	RA11709	6-p02	
CHG-6.0	91160	RA11773	6-p02	
CHG-6.35	91196	RA11714	6-p02	
CHH-1.0	90610	RE11729	6-p02	
CHH-1.5	90615		6-p02	
CHH-1.6	90616	RE11659	6-p02	

Product Name	Product Code	Legacy	Page	
CHH-2.0	90620	RE11734	6-p02	
CHH-2.35	90692	RE11625	6-p02	
CHH-2.5	90625		6-p02	
CHH-3.0	90630	RE11739	6-p02	
CHH-3.175	90693	RE11630	6-p02	
CHK-0.5	91505	PL42665	6-p03	
CHK-0.6	91506		6-p03	
CHK-0.7	91507	PL42667	6-p03	
CHK-0.8	91508	PL42668	6-p03	
CHK-0.9	91509	PL42692	6-p03	
CHK-1.0	91510	PL42691	6-p03	
CHK-1.1	91511	PL42699	6-p03	
CHK-1.2	91512	PL42682	6-p03	
CHK-1.3	91513	PL42693	6-p03	
CHK-1.4	91514	PL42700	6-p03	
CHK-1.5	91515	PL42695	6-p03	
CHK-1.6	91516	PL42696	6-p03	
CHK-1.7	91517	PL42709	6-p03	
CHK-1.8	91518	PL42698	6-p03	
CHK-1.9	91519		6-p03	
CHK-2.0	91520	PL42672	6-p03	
CHK-2.1	91521	PL42681	6-p03	
CHK-2.2	91522	PL42662	6-p03	
CHK-2.3	91523		6-p03	
CHK-2.35	91592	PL42690	6-p03	
CHK-2.4	91524	PL42710	6-p03	
CHK-2.5	91525	PL42663	6-p03	
CHK-2.6	91526	PL42712	6-p03	
CHK-2.7	91527	PL42617	6-p03	
CHK-2.8	91528	PL42694	6-p03	
CHK-2.9	91529	PL42689	6-p03	
CHK-3.0	91530	PL42669	6-p03	
CHK-3.0AA	91597		6-p03	
CHK-3.1	91531	PL42670	6-p03	
CHK-3.175	91593	PL42685	6-p03	
CHK-3.175AA	91598		6-p03	
CHK-3.2	91532		6-p03	
CHK-3.3	91533	PL42705	6-p03	
CHK-3.4	91534	PL42701	6-p03	
CHK-3.5	91535	PL42707	6-p03	
CHK-3.6	91536	PL42706	6-p03	
CHK-3.7	91537		6-p03	
CHK-3.8	91538	PL42702	6-p03	
CHK-3.9	91539		6-p03	
CHK-4.0	91540	PL42678	6-p03	
CHK-4.0AA	91599		6-p03	
CHK-4.1	91541	PL42711	6-p03	
CHK-4.2	91542		6-p03	
CHK-4.3	91543	PL42671	6-p03	
CHK-4.4	91544	PL42673	6-p03	
CHK-4.5	91545	PL42687	6-p03	
CHK-4.6	91546		6-p03	
CHK-4.7	91547	PL42674	6-p03	
CHK-4.76	91594	PL42680	6-p03	
CHK-4.8	91548		6-p03	
CHK-4.9	91549		6-p03	
CHK-5.0	91550	PL42676	6-p03	
CHK-5.1	91551	PL42677	6-p03	
CHK-5.2	91552	PL42708	6-p03	
CHK-5.3	91553		6-p03	
CHK-5.4	91554	PL42703	6-p03	
CHK-5.5	91555	PL42704	6-p03	
CHK-5.6	91556	PL42679	6-p03	
CHK-5.7	91557		6-p03	
CHK-5.8	91558		6-p03	
CHK-5.9	91559	PL42697	6-p03	
CHK-6.0	91560	PL42686	6-p03	
CHK-6.0AA	91600		6-p03	

Product Name	Product Code	Legacy	Page	
CHK-6.35	91596	PL42675	6-p03	
CHK-6.35AA	91601		6-p03	
CHM-1.0	90910	RE11605	6-p04	
CHM-1.6	90916	RE11600	6-p04	
CHM-2.0	90920	RE11609	6-p04	
CHM-2.35	90992	RE11602	6-p04	
CHM-3.0	90930	RE10459	6-p04	
CHM-3.175	90993	RE11604	6-p04	
CHN-02	2124	AS32124	6-p07	
CHN-16	2161		6-p07	
CHN-3A	2160		6-p07	
CHN-A	2102		6-p06	
CHN-AA	2159		6-p06	
CHN-B	2123	AS12123	6-p06	
CHN-E	2119	PS12119	6-06	
CHP-2.0	90720	AS72115	6-p04	
CHP-3.0	90730	AS72116	6-p04	
CHP-3.175	90793	AS72117	6-p04	
CHR-2.0	91920		6-p04	
CHR-3.0	91930		6-04	
CHR-3.0 RS	93201		6-p04	
CHR-3.175	91993		6-p04	
CHR-3.175 RS	93202		6-p04	
CHR-4.0	91940		6-p04	
CHR-4.0 RS	93203		6-p04	
CHR-6.0	91960		6-p04	
CHR-6.0 RS	93204		6-p04	
CHR-6.35	91996		6-p04	
CHR-6.35 RS	93205		6-p04	
CHS-0.8	90508	NK10216	6-p04	
CHS-0.9	90509		6-p04	
CHS-1.0	90510	NK10218	6-p04	
CHS-1.1	90511		6-p04	
CHS-1.2	90512		6-p04	
CHS-1.3	90513		6-p04	
CHS-1.4	90514		6-p04	
CHS-1.5	90515	NK10219	6-p04	
CHS-1.6	90516	NK10220	6-p04	
CHS-1.7	90517		6-p04	
CHS-1.8	90518		6-p04	
CHS-1.9	90519		6-p04	
CHS-2.0	90520	NK10221	6-p04	
CHS-2.1	90521		6-p04	
CHS-2.2	90522		6-p04	
CHS-2.3	90523		6-p04	
CHS-2.35	90592	NK10215	6-p04	
CHS-2.4	90524	NK10224	6-p04	
CHS-2.5	90525	NK10222	6-p04	
CHS-2.6	90526		6-p04	
CHS-2.7	90527		6-p04	
CHS-2.8	90528		6-p04	
CHS-2.9	90529	NK10209	6-p04	
CHS-3.0	90530	NK10223	6-p04	
CHS-3.175	90593	NK10210	6-p04	
CHSS-1.0	93010		6-p04	
CHSS-1.5	93015		6-p04	
CHSS-2.0	93020		6-p04	
CHSS-2.35	93092		6-p04	
CHSS-2.5	93025		6-p04	
CHSS-3.0	93030		6-p04	
CHSS-3.175	93093		6-p04	
CN-01	1015	RE10210	1-p18	
CNA	1043	NK11043	6-p09	
CWH46G20mm	64831		1-p37	
CWH46G30mm	64836	NK86A46S	1-p37	
CWH80G30mm	64838	NK45801	1-p37	
CWS36G20mm	64830		1-p37	
CWS36G30mm	64835		1-p37	

INDEX (Product Name)

Product Name	Product Code	Legacy	Page
CWS80G20mm	64832	NK06104	1-p37
CWS80G30mm	64837	NK45800	1-p37
DB15M	DB15M		2-p14
DB25M	DB25M		2-p14
DCH-J0A	2136	AS02136	6-p14
DCH-J0K	2132	AS42132	6-p14
DCH-J0N	2134	AS42134	6-p14
E023011	1424		6-p10
E037011	1425	EO37011	6-p10
E3000-PEX4	8407		2-p42
E304052	E304052		6-p13
E4000-PB	8473		2-p89
E4000-PEX4	8474		2-p89
E4000-SRB	8475		2-p89
EBS-101	1145	KBS61557	1-p26
ECN-011	1518	ES11518	1-p27
EGF-19	2138	AS2138	6-p13
EHG-400	2973	ES41552	1-p25
EHL-401	2912	ES11515	1-p24
EHR-500	7182	ES9090	1-p24
EIC-300	2933	ES81525	1-p25
EKC-300	2932	ES81526	1-p25
ELS-100	1516	ES11516	1-p26
EM20-S6000	7584	1745	2-p49
EM-2350J	7721		2-p30
EM25-5000-J4	8333	AS88322	2-p30
EM25N-5000-J4	8334	AS88322P	2-p22
EM25-S6000	7583	1746	2-p48
EM-3030T-J	7358		2-p57
EM-3030T-J-2M	7359		2-p57
EM-3060	1597		2-p54
EM-3060J	1765		2-p55
EM-3060J-2M	1779		2-p55
EM-3080J	1781		2-p74
EM-3080J-2M	1788		2-p74
EM30-S6000	7589	1747	2-p48
EM-4020	8348		2-p82
EM-4020A	8349		2-p82
EM-4040	8346		2-p82
EM-4040A	8347		2-p82
EMA-3020K	7601	1759	2-p50
EMA-3020S	7605	1758	2-p50
EMCD-2350J-4M	7722		2-p30
EMCD-2350J-6M	7723		2-p30
EMCD-2350J-8M	7724		2-p30
EMCD-3000-4M	1748		2-p49
EMCD-3000-6M	1749		2-p49
EMCD-3000-8M	1750		2-p49
EMCD-3000A-4M	1744		2-p49
EMCD-3000A-6M	1743		2-p49
EMCD-3000A-8M	1742		2-p49
EMCD-3000J-3M	1778		2-p45
EMCD-3000J-4M	1768		2-p45
EMCD-3000J-6M	1767		2-p45
EMCD-3000J-8M	1766		2-p45
EMCD-4000-2M	9253		2-p88
EMCD-4000-4M	9254		2-p88
EMCD-4000-6M	9255		2-p88
EMCD-4000-8M	9256		2-p88
EMCD-4000S-2M	9257		2-p88
EMCD-4000S-4M	9258		2-p88
EMCD-4000S-6M	9259		2-p88
EMCD-4000S-8M	9260		2-p88
EMCD-810-4M	9248		4-p09
EMCD-810-6M	9249		4-p09
EMCD-810-8M	9250		4-p09
EMCD-BM3-3M	9261		2-p14
EMCD-BM3-5M	9262		2-p14
EMCD-BM3-7M	9263		2-p14
EMCD-BM3A-4M	9267		2-p14
EMCD-BM3A-6M	9268		2-p14
EMCD-BM3A-8M	9269		2-p14
EMCD-BM3S-4M	9264		2-p14
EMCD-BM3S-6M	9265		2-p14
EMCD-BM3S-8M	9266		2-p14
EML-8	1554	ES51554	1-p26
EMR-3008K	7596	1757	2-p45
EMS-3060A	7587	1755	2-p44
EMS-3060K	7593	1756	2-p44
EMSF-3060K	7644		2-p46
ENK-250T	8087		1-p07
ENK-410S	8086		1-p07
ENK-500C	9088	ES9088	1-p24
ENK-500T	9089	ES9089	1-p24
ENK50C-HR	7339	ES9091	1-p22
ENK50T-HR	7341	ES9092	1-p22
ENKCD-250C	8091		6-p08
ENKCD-250T	8089		6-p08
ENKCD-401	9046	E096B012	6-p09
ENKCD-401-3M	9047		6-p09
ENKCD-410C	8090		6-p08
ENKCD-410S	8088		6-p08
ENKCD-50C	9093	ES9093	6-p08
ENKCD-50C 3M	9095		6-p08
ENKCD-50T	9094	ES9094	6-p08
ENKCD-50T 3M	9096		6-p08
ERA-270	2923	ES41551	1-p25
ERG-01	1517	ES11517	1-p27
ERG-01B	1553	ES41553	1-p27
ES50C-HR	7340	ES9085	1-p22
ES50T-HR	7342	ES9086	1-p22
EV250-IR	8232		1-p06
EV410-IH	8222		1-p06
EV410-IR	8231		1-p06
FBA-2	62526	LS10848	1-p14
FC-24	8103	SHE8103	6-p09
FC-35	1404	EL11330	6-p09
FC-40	1440	EG11404	6-p09
FC-64	8106		6-p09
FD120G30mm	64844		1-p37
FD180G30mm	64846		1-p37
FD240G30mm	64847		1-p37
FD400G30mm	64849		1-p37
FD80G30mm	64842		1-p37
FJ-01	2038	AA82038	6-p13
FJ-02	2039	AA82039	6-p13
FJ-03	2040	AA82040	6-p13
FVA	62751	LS10867	1-p14
GB30	BLC1		4-p36
GB40	BLC2		4-p36
GN	K137A251		6-p11
GR100ML	1549		6-p11
GR10ML	1550		6-p11
GR-22.8	1888		6-p18
GR3.0ML	1547		6-p11
GR-30	1885		6-p18
GR-40	1886		6-p18
GS100G4mm	42423		1-p37
HA-500	8060	RE18060	1-p16
HES510-BT30	7621	1943	4-p04
HES510-BT30-SK	9148	ASE9148	4-p16
HES510-BT40	7619	1946	4-p04
HES510-BT40-SK	9149	ASE9149	4-p16
HES510-BT50	7617	1951	4-p05
HES510-BT50-SK	9150	ASE9150	4-p16
HES510-CAT40	1949		4-p04

Product Name	Product Code	Legacy	Page	
HES510-CAT40-SK	9193	ASE9193	4-p16	
HES510-CAT50	1954		4-p05	
HES510-CAT50-SK	9192	ASE9192	4-p16	
HES510-HSK A100	7625	1957	4-p07	
HES510-HSK A100-SK	9151	ASE9151	4-p16	
HES510-HSK A63	7624	1956	4-p07	
HES510-HSK A63-SK	9152	ASE9152	4-p16	
HES510-IT40	1950		4-p04	
HES510-IT40-SK	9191		4-p16	
HES510-IT50	1955		4-p05	
HES510-IT50-SK	9190		4-p16	
HES510-NT30	7622	1944	4-p04	
HES510-NT30M	1945		4-p04	
HES510-NT30M-SK	9154	ASE9154	4-p16	
HES510-NT30-SK	9153	ASE9153	4-p16	
HES510-NT40	7620	1947	4-p04	
HES510-NT40M	1948		4-p04	
HES510-NT40M-SK	9156	ASE9156	4-p16	
HES510-NT40-SK	9155	ASE9155	4-p16	
HES510-NT50	7618	1952	4-p05	
HES510-NT50M	1953		4-p05	
HES510-NT50M-SK	9158	ASE9158	4-p16	
HES510-NT50-SK	9157	ASE9157	4-p16	
HES510-R8	9196		4-p06	
HES510-R8-SK	9159	K812A271	4-p16	
HES510-ST32	7623	9197	4-p06	
HES510-ST32-SK	9160	K812A272	4-p16	
HES810-BT30	7611		4-p11	
HES810-BT40	7612		4-p11	
HES810-BT50	7614		4-p12	
HES810-CAT40	9201		4-p11	
HES810-CAT50	9221		4-p11	
HES810-HSK A63	7615		4-p12	
HES810-NT40	7613		4-p11	
HES810-ST32	7616		4-p13	
HG-200	2810	RE10188	1-p09	
HH-01	8050	EMX8050	6-p09	
HPS250-BT30A	7005	HPS01	4-p34	
HPS250-BT30B	7006	HPS02	4-p34	
HPS250-BT30C	7007	HPS03	4-p34	
HPS250-CAT40A	7008	HPS07	4-p35	
HPS250-CAT40B	7009	HPS08	4-p35	
HPS250-CAT40C	7010	HPS09	4-p35	
HPS500-BT30A	7011	HPS04	4-p34	
HPS500-BT30B	7012	HPS05	4-p34	
HPS500-BT30C	7013	HPS06	4-p34	
HPS500-CAT40A	7014	HPS10	4-p35	
HPS500-CAT40B	7015	HPS11	4-p35	
HPS500-CAT40C	7016	HPS12	4-p35	
HTS1501S-BT30	8296		4-p27	
HTS1501S-BT40	8297		4-p27	
HTS1501S-BT50	8281		4-p27	
HTS1501S-HSK A63	8298		4-p29	
HTS1501S-HSK E25	8300		4-p28	
HTS1501S-HSK E32	8283		4-p28	
HTS1501S-HSK E40	8279		4-p28	
HTS1501S-HSK E50	8280		4-p28	
HTS1501S-HSK F63	8282		4-p29	
HTS1501S-M2040	8299		4-p29	
IC-300	2900	RE10182	1-p10	
IG-400	2812	2811	1-p08	
IH-300	7097	RE10178	1-p08	
IM-300	1003	RO10163A	1-p33	
IM-301	1004	RO10163	1-p33	
IR-310	1144	RE11008	1-p08	
K-202	AA10480C		6-p11	
K-204	2030	K155211	6-p12	
K-206	2027	AA10426	6-p12	

Product Name	Product Code	Legacy	Page	
K-207	2020		6-p12	
K-208	1061	AA10055	6-p11	
K-209	1060	AA10040	6-p11	
K-211	AA10478C		6-p11	
K-212	2013	RE22015	6-p17	
K-213	1038	K076211	6-p12	
K-215	2028	0911406020	6-p12	
K-216	2029	0911508010	6-p12	
K-220	2011	PL10622	6-p16	
K-221	2049		6-p12	
K-223	2043		6-p12	
K-224	2050		6-p12	
K-231	2007	RE10394	6-p17	
K-232	2006	RE10389	6-p17	
K-233	2014	RE22014	6-p17	
K-236	2046	RE82046	6-p17	
K-237	2041	Z101240	6-p12	
K-238	2042	T815220	6-p12	
K-241	2035	AS12035	6-p13	
K-242	2036	AS12036	6-p13	
K-244	2037	AS12037	6-p13	
K-246	1546	AS1546	6-p11	
K-247	2056	K-247	6-p12	
K-248	2016	LS22016	6-p17	
K-249	2017	LS22017	6-p17	
K-251	2058		6-p12	
K-252	90316	RE10360	6-p06	
K-253	90016	RE10356	6-p06	
K-254	2059		6-p12	
K-256	2052		6-p12	
K-257	2022	PL12022	6-p12	
K-258	2023	PL12023	6-p12	
K-259	2024	PL12024	6-p12	
K-263	2122	RA11820	6-p07	
K-265	2129	RA11900	6-p07	
K-265A	2158		6-p07	
K-269	1484		6-p10	
K-273	8107		6-p09	
K-274	8104		6-p09	
K-275	2070	AA10411	6-p12	
K-277	2073		6-p17	
KBS-101	1146	KBS61065	1-p16	
KC-300	2901	RE10266	1-p10	
KCH-01A (5.0)	AS02135		6-p14	
KCH-01A (6.0)	2135		6-p14	
KCH-01A (8.0)	2155		6-p14	
KCH-01N (5.0)	2153	AS42133	6-p14	
KCH-01N (6.0)	2133		6-p14	
KCH-01N (8.0)	2154		6-p14	
KCH-02 (5.0)	2146	AS41605	6-p14	
KCH-02 (6.0)	1077		6-p14	
KCH-02 (8.0)	2147		6-p14	
KCH-03 (5.0)	2148	K301085	6-p14	
KCH-03 (6.0)	2130	AS42130A	6-p14	
KCH-03 (6.35)	2164	AS42130	6-p14	
KCH-03 (8.0)	2149		6-p14	
L-008	64171	RE11900	1-p11	
L-012	64172	RE11902	1-p11	
L-018	64173	RE11904	1-p11	
L-024	64174	RE11905	1-p11	
L-032	64175	RE11906	1-p11	
L-040	64176	RE11908	1-p11	
L-060	64177	RE11910	1-p11	
L-080	64178	RE11912	1-p11	
L-100	64179	RE11914	1-p11	
L-150	64180	RE11925	1-p11	
LKE-2A	62525	LS10891	1-p14	
LS-100	1302	LS10815	1-p12	

INDEX (Product Name)

Product Name	Product Code	Legacy	Page	Price
M-008	64151	RE11800	1-p11	
M-012	64152	RE11802	1-p11	
M-018	64153	RE11804	1-p11	
M-024	64154	RE11805	1-p11	
M-032	64155	RE11806	1-p11	
M-040	64156	RE11808	1-p11	
M-060	64157	RE11810	1-p11	
M-080	64158	RE11812	1-p11	
M-100	64159	RE11814	1-p11	
M-150	64160	RE11815	1-p11	
MFC-300M	1013	RE10252	1-p09	
MFC-300S	1012	RE10247	1-p09	
ML-8	1307	LS51307	1-p13	
MSS-1902R	2915	AS41605	3-p30	
MSS-1902RA	2916	AS41607	3-p30	
MSS-1908R	2913	AS41601	3-p30	
MSS-1908RA	2914	AS41603	3-p30	
MSS-1930R	2939	AS91676	3-p30	
MSS-1930RA	2940	AS91678	3-p30	
MSS-2002R	2977	AS41613	3-p30	
MSS-2002RA	2978	AS41615	3-p30	
MSS-2008R	2975	AS41609	3-p30	
MSS-2008RA	2976	AS41611	3-p30	
MSS-2030R	2941	AS41710	3-p30	
MSS-2030RA	2942	AS41712	3-p30	
MSS-2202R	2921	AS81684	3-p31	
MSS-2202RA	2922	AS81686	3-p31	
MSS-2208R	2983	AS81680	3-p31	
MSS-2208RA	2920	AS81682	3-p31	
MSS-2230R	2943	AS91710	3-p31	
MSS-2230RA	2944	AS91712	3-p31	
MSS-2501R	2986	AS81706	3-p33	
MSS-2501RA	2987	AS81708	3-p33	
MSS-2506R	2985	AS81698	3-p33	
MSS-2506RA	2927	AS81700	3-p33	
MSS-2524R	2926	AS81690	3-p33	
MSS-2524RA	2984	AS81692	3-p33	
MSSH-2501R	2989	AS81737	3-p33	
MSSH-2501RA	2931	AS81739	3-p33	
MSSH-2506R	2988	AS81729	3-p33	
MSSH-2506RA	2930	AS81731	3-p33	
MSSH-2524R	2928	AS81721	3-p33	
MSSH-2524RA	2929	AS81723	3-p33	
MSST-2302R	2918	AS41653	3-p32	
MSST-2302RA	2919	AS41655	3-p32	
MSST-2308R	2981	AS41645	3-p32	
MSST-2308RA	2982	AS41647	3-p32	
MSST-2330R	2979	AS41637	3-p32	
MSST-2330RA	2980	AS41639	3-p32	
NA45-230	2906	NK45230	1-p35	
NA45-400	2905	NK45400	1-p35	
NA90-230	2907	NK90230	1-p35	
NCH-01	1045	NK11045	6-p15	
NCL-151C	8023	EMX8023	6-p08	
NCL-151S	8024	EMX8024	6-p08	
NCL-261C	8013	EMX8013	6-p08	
NCL-261S	8014	EMX8014	6-p08	
NCL-351C	8004	EMX8004	6-p08	
NCL-351S	8005	EMX8005	6-p08	
NCL-EXT	8051	EMX8051	6-p08	
NE211	9775		2-p42	
NE212	9781		2-p43	
NE246	8472		2-p80	
NE249 120	8224		1-p04	
NE273 B Type	8478		2-p05	
NE273 D Type	8490		2-p05	
NE287	8491		4-p22	
NE287 HC	8492		4-p23	

Product Name	Product Code	Legacy	Page	
NE314	7720		2-p21	
NE330	7778		1-p40	
NE96	9793	ES9087	1-p21	
NGA	62527	LS10853	1-p14	
NGF2-19	2143	AS42127	6-p13	
NKM6-2.35	92030		6-p06	
NKM6-3.0	92092		6-p06	
NKM6-3.175	92093		6-p06	
NLS-110	1483		1-p12	
NR-2351	2958	AS18220	2-p31	
NR-2551	2955	AS81819P	2-p23	
NR-303	7591	AS41830	2-p31	
NR3060-AQC	9220		2-p64	
NR-3060S	7590	1583	2-p58	
NR-3080S	7588	1783	2-p75	
NR-311	2917	AS42511	2-p33	
NR-403E	2936	ASE1514	2-p59	
NR-4040	9213		2-p83	
NR4040-AQC	9219		2-p86	
NR40-5100 ATC	1582		2-p62	
NR-453E	2937	ASE1566	2-p58	
NR50-5100 ATC	1580		2-p62	
NR50-5100 ATC-RS	7690		2-p62	
NR-601	2909	AS10073	3-p08	
NRAF-5080	1793		2-p75	
NR-H2551	2956	AS81820P	2-p23	
NRR-2651	1835	AS81835P	2-p23	
NRR-3060	1836		2-p63	
NRR3060-QC	9208		2-p65	
NRR4040-QC	9214		2-p87	
NSP-601A	2990	NK60100	1-p34	
PCR-30	2067		6-p17	
PL600-H3440	7356		4-p43	
PL600-M2040	7355		4-p43	
PR-03	1120	T815016I	6-p10	
PR2-06	1126		1-p38	
PR2-304S	1125	Y150022I	1-p38	
PR-304	1122	T815001I	1-p38	
QC3-A	9209		2-p64	
QC3-ADP	9211		2-p65	
QC3-K	9210		2-p64	
QC5-16	9216		2-p86	
QC5-16 ADP	9218		2-p87	
QC5-K	9215		2-p86	
QC5-K ADP	9217		2-p87	
R301-IR	1164	1148	1-p32	
RA-100	2902	AS11411	2-p32	
RA-151E	2910	ASE1505	2-p61	
RA-200	2903	AS11412	2-p32	
RA-271E	2911	ASE1506	2-p61	
RAS-101	2924	AS51094	2-p32	
RAS-151E	2925	ASE1559	2-p60	
RAX-271E	2961	ASE1579	2-p60	
RAX-71E	2962	ASE1576	2-p60	
RB-20x22	1877		6-p19	
RB-20x22.8	1876		6-p19	
RB-20x23	1875		6-p19	
RB-20x25	1878		6-p19	
RB-20x25.4	1879		6-p19	
RB-22.8x25	1871		6-p19	
RB-22.8x25.4	1873		6-p19	
RB-22x25.4x34L	1884		6-p19	
RB-22x25x34L	1883		6-p19	
RB-30x32	1880		6-p19	
RB-30x36	1881		6-p19	
RBS-22.8x25	1872		6-p19	
RBS-22.8x25.4	1874		6-p19	
RG-01	1009	RO10214	1-p18	

Product Name	Product Code	Legacy	Page	
RG-02	1010	RO10228	1-p18	
RP20mm	64821		1-p37	
RP30mm	64822	NK11033	1-p37	
S-008	64131	LS10900	1-p11	
S-012	64132	LS10902	1-p11	
S-018	64133	LS10904	1-p11	
S-024	64134	LS10905	1-p11	
S-032	64135	LS10906	1-p11	
S-040	64136	LS10908	1-p11	
S-060	64137	LS10910	1-p11	
S-080	64138	LS10912	1-p11	
S-100	64139	LS10914	1-p11	
S-150	64140	LS10915	1-p11	
SB-1	500101		4-p23	
SB-2	500102		4-p23	
SB-3	500103		4-p23	
SB-4	500104		4-p23	
SBFS	BLC4		4-p36	
SBHS	BLC3		4-p36	
SLR	K1049101		6-p11	
SLS-16	1380	LS11380	1-p13	
SP-22x10L	1882		2-p08	
T-751	2002	HR10303	6-p17	
TP-12	1067	KBS1067	6-p10	
TP-12A	1103		6-p10	
TPA-12A	1104		6-p10	
U235406	1544	U235406	5-p05	
US-50P	7780		1-p40	
US-50P Set (120V)	7775		1-p40	
VEA	62505	LS10834	1-p14	
VES	62502	LS10875	1-p14	
WR10X10	2008	RA10406	6-p16	
WR12X14	2026	AS42026	6-p16	
WR15X17	2048		6-p16	
WR16X18	2047		6-p16	
WR17X22	2083		6-p16	
WR20X24	2018	RA12018	6-p16	
WR22X27	2045	RA12045	6-p16	
WR36	2080		6-p17	
WR4X7	2068		6-p17	
WR6.1X8	2069		6-p16	
WR6X4.5	2001	RE22001	6-p16	
WR7X5.1	2009	RE10207	6-p16	
WR7X5.5	2010	RE10290	6-p16	
WR8X5	2012	RA12012	6-p16	
WR9X11	2054		6-p16	
WR9X9	2064		6-p16	
WRL9	2055		6-p17	
WRT10	2082		6-p17	Call For Details
WRT14	2081		6-p17	Call For Details
Xpeed1200	1854		4-p49	Call For Details
Xpeed1600	1855		4-p48	Call For Details
Z095101	1519		6-p09	

1
EmaxEVO
ESPERT
ROTUS
IMPULSE
PRESTO II
Sheenus ZERO
2
iSpeed3
E2000
ø1.0"/ø0.98"/ø0.897"
E3000
– One Piece
E3000
– Modular
ø1.18"
ø1.0"/ø0.98"
ø0.897"
E3000
– 80,000rpm
E4000
3
MA
ø0.897"
ø1.0"
ø0.98"
ø1.18"
MS
ø0.75"
ø0.79"
ø0.87"
ø0.91"
ø1.0"
ø0.98"
4
HES
iSpeed5
HTS
HPS
PLANET
Xpeed
ABT
5
AIR LINE KIT
6
PARTS
7
TECHNICAL DATA
8
APPLICATION EXAMPLES
INDEX

INDEX

Legacy ▶

1
EmaxEVO
ESPERT
ROTUS
IMPULSE
PRESTO II
Sheenus ZERO
2
iSpeed3
E2000
ø1.0"/ø0.98"/ø0.897"
E3000
– One Piece
E3000
– Modular
ø1.18"
ø1.0"/ø0.98"
ø0.897"
E3000
– 80.000rpm
E4000
3
MA
ø0.897"
ø1.0"
ø0.98"
ø1.18"
MS
ø0.75"
ø0.79"
ø0.87"
ø0.91"
ø1.0"
ø0.98"
4
HES
iSpeed5
HTS
HPS
PLANET
Xpeed
ABT
5
AIR LINE KIT
6
PARTS
7
TECHNICAL DATA
8
APPLICATION EXAMPLES
INDEX

INDEX (Legacy)

Legacy	Product Code	Product Name	Page	
1148	1164	R301-IR	1-p32	
1583	7590	NR-3060S	2-p58	
1745	7584	EM20-S6000	2-p49	
1746	7583	EM25-S6000	2-p48	
1747	7589	EM30-S6000	2-p48	
1755	7587	EMS-3060A	2-p44	
1756	7593	EMS-3060K	2-p44	
1757	7596	EMR-3008K	2-p45	
1758	7605	EMA-3020S	2-p50	
1759	7601	EMA-3020K	2-p50	
1783	7588	NR-3080S	2-p75	
1784	1789	BMS-4020	2-p81	
1785	1790	BMS-4020RA	2-p81	
1786	1791	BMS-4040	2-p81	
1787	1792	BMS-4040RA	2-p81	
1943	7621	HES510-BT30	4-p04	
1944	7622	HES510-NT30	4-p04	
1946	7619	HES510-BT40	4-p04	
1947	7620	HES510-NT40	4-p04	
1951	7617	HES510-BT50	4-p05	
1952	7618	HES510-NT50	4-p05	
1956	7624	HES510-HSK A63	4-p07	
1957	7625	HES510-HSK A100	4-p07	
2811	2812	IG-400	1-p08	
7684	7685	BMS-4040 2M	2-p81	
9197	7623	HES510-ST32	4-p06	
60735	60519	60519	1-p41	
0911406020	2028	K-215	6-p12	
0911508010	2029	K-216	6-p12	
AA10040	1060	K-209	6-p11	
AA10055	1061	K-208	6-p11	
AA10411	2070	K-275	6-p12	
AA10426	2027	K-206	6-p12	
AA82038	2038	FJ-01	6-p13	
AA82039	2039	FJ-02	6-p13	
AA82040	2040	FJ-03	6-p13	
AF10045	1064	AFC-45	6-p09	
AS02136	2136	DCH-J0A	6-p14	
AS02137	2137	AGM-01A	6-p15	
AS10073	2909	NR-601	3-p08	
AS11029	1029	AGM-01	6-p15	
AS11071	1071	AM-600R	3-p05	
AS11395	1018	AM-300RA	3-p04	
AS11397	1021	AM-300R	3-p04	
AS11411	2902	RA-100	2-p32	
AS11412	2903	RA-200	2-p32	
AS11414	1022	ARG-01	2-p34	
AS11428	1023	ARG-02	2-p34	
AS11510	2974	AMH-301	2-p33	
AS11797	1797	AM-3020R	3-p19	
AS11798	1798	AM-3020L	3-p19	
AS11799	1799	AM-3020RA	3-p19	
AS11800	1800	AM-3020LA	3-p19	
AS12035	2035	K-241	6-p13	
AS12036	2036	K-242	6-p13	
AS12037	2037	K-244	6-p13	
AS12123	2123	CHN-B	6-p06	
AS12512	2512	AM-600RA	3-p05	
AS1546	1546	K-246	6-p11	
AS18220	2958	NR-2351	2-p31	
AS2138	2138	EGF-19	6-p13	
AS32124	2124	CHN-02	6-p07	
AS41079	1079	AM-310R	3-p04	
AS41081	1081	AM-310RA	3-p05	
AS41601	2913	MSS-1908R	3-p30	
AS41603	2914	MSS-1908RA	3-p30	
AS41605	2146	KCH-02 (5.0)	6-p14	
AS41605	2915	MSS-1902R	3-p30	

Legacy	Product Code	Product Name	Page	
AS41607	2916	MSS-1902RA	3-p30	
AS41609	2975	MSS-2008R	3-p30	
AS41611	2976	MSS-2008RA	3-p30	
AS41613	2977	MSS-2002R	3-p30	
AS41615	2978	MSS-2002RA	3-p30	
AS41637	2979	MSST-2330R	3-p32	
AS41639	2980	MSST-2330RA	3-p32	
AS41645	2981	MSST-2308R	3-p32	
AS41647	2982	MSST-2308RA	3-p32	
AS41653	2918	MSST-2302R	3-p32	
AS41655	2919	MSST-2302RA	3-p32	
AS41710	2941	MSS-2030R	3-p30	
AS41712	2942	MSS-2030RA	3-p30	
AS41830	7591	NR-303	2-p31	
AS42026	2026	WR12X14	6-p16	
AS42127	2143	NGF2-19	6-p13	
AS42130	2164	KCH-03 (6.35)	6-p14	
AS42130A	2130	KCH-03 (6.0)	6-p14	
AS42131	2131	AGM-03	6-p15	
AS42132	2132	DCH-J0K	6-p14	
AS42133	2153	KCH-01N (5.0)	6-p14	
AS42134	2134	DCH-J0N	6-p14	
AS42511	2917	NR-311	2-p33	
AS43737	3737	AX-105	6-p15	
AS51094	2924	RAS-101	2-p32	
AS72115	90720	CHP-2.0	6-p04	
AS72116	90730	CHP-3.0	6-p04	
AS72117	90793	CHP-3.175	6-p04	
AS81082	1082	AM-310LA	3-p05	
AS81083	1083	AM-300L	3-p04	
AS81084	1084	AM-300LA	3-p04	
AS81085	1085	AM-310L	3-p04	
AS81680	2983	MSS-2208R	3-p31	
AS81682	2920	MSS-2208RA	3-p31	
AS81684	2921	MSS-2202R	3-p31	
AS81686	2922	MSS-2202RA	3-p31	
AS81690	2926	MSS-2524R	3-p33	
AS81692	2984	MSS-2524RA	3-p33	
AS81698	2985	MSS-2506R	3-p33	
AS81700	2927	MSS-2506RA	3-p33	
AS81706	2986	MSS-2501R	3-p33	
AS81708	2987	MSS-2501RA	3-p33	
AS81721	2928	MSSH-2524R	3-p33	
AS81723	2929	MSSH-2524RA	3-p33	
AS81729	2988	MSSH-2506R	3-p33	
AS81731	2930	MSSH-2506RA	3-p33	
AS81737	2989	MSSH-2501R	3-p33	
AS81739	2931	MSSH-2501RA	3-p33	
AS81801P	1801	AM-2526R	3-p13	
AS81802P	1802	AM-2526L	3-p13	
AS81803P	1803	AM-2526RA	3-p13	
AS81804P	1804	AM-2526LA	3-p13	
AS81805P	1805	AM-H2526R	3-p13	
AS81806P	1806	AM-H2526L	3-p13	
AS81807P	1807	AM-H2526RA	3-p13	
AS81808P	1808	AM-H2526LA	3-p13	
AS81819P	2955	NR-2551	2-p23	
AS81820P	2956	NR-H2551	2-p23	
AS81822P	1822	ARG-2504N	2-p24	
AS81824P	1824	ARG-2516N	2-p24	
AS81826P	1826	ARG-H2504N	2-p24	
AS81828P	1828	ARG-H2516N	2-p24	
AS81835P	1835	NRR-2651	2-p23	
AS88322	8333	EM25-5000-J4	2-p30	
AS88322P	8334	EM25N-5000-J4	2-p22	
AS91676	2939	MSS-1930R	3-p30	
AS91678	2940	MSS-1930RA	3-p30	
AS91710	2943	MSS-2230R	3-p31	

Legacy	Product Code	Product Name	Page
AS91712	2944	MSS-2230RA	3-p31
ASE1505	2910	RA-151E	2-p61
ASE1506	2911	RA-271E	2-p61
ASE1507	1507	ARG-011E	2-p66
ASE1508	1508	ARG-021E	2-p66
ASE1514	2936	NR-403E	2-p59
ASE1559	2925	RAS-151E	2-p60
ASE1566	2937	NR-453E	2-p58
ASE1576	2962	RAX-71E	2-p60
ASE1579	2961	RAX-271E	2-p60
ASE9148	9148	HES510-BT30-SK	4-p16
ASE9149	9149	HES510-BT40-SK	4-p16
ASE9150	9150	HES510-BT50-SK	4-p16
ASE9151	9151	HES510-HSK A100-SK	4-p16
ASE9152	9152	HES510-HSK A63-SK	4-p16
ASE9153	9153	HES510-NT30-SK	4-p16
ASE9154	9154	HES510-NT30M-SK	4-p16
ASE9155	9155	HES510-NT40-SK	4-p16
ASE9156	9156	HES510-NT40M-SK	4-p16
ASE9157	9157	HES510-NT50-SK	4-p16
ASE9158	9158	HES510-NT50M-SK	4-p16
ASE9192	9192	HES510-CAT50-SK	4-p16
ASE9193	9193	HES510-CAT40-SK	4-p16
E096B012	9046	ENKCD-401	6-p09
EG11404	1440	FC-40	6-p09
EL11330	1404	FC-35	6-p09
EMX8004	8004	NCL-351C	6-p08
EMX8005	8005	NCL-351S	6-p08
EMX8013	8013	NCL-261C	6-p08
EMX8014	8014	NCL-261S	6-p08
EMX8023	8023	NCL-151C	6-p08
EMX8024	8024	NCL-151S	6-p08
EMX8050	8050	HH-01	6-p09
EMX8051	8051	NCL-EXT	6-p08
EO37011	1425	E037011	6-p10
ES11515	2912	EHL-401	1-p24
ES11516	1516	ELS-100	1-p26
ES11517	1517	ERG-01	1-p27
ES11518	1518	ECN-011	1-p27
ES41551	2923	ERA-270	1-p25
ES41552	2973	EHG-400	1-p25
ES41553	1553	ERG-01B	1-p27
ES51554	1554	EML-8	1-p26
ES81525	2933	EIC-300	1-p25
ES81526	2932	EKC-300	1-p25
ES9085	7340	ES50C-HR	1-p22
ES9086	7342	ES50T-HR	1-p22
ES9087	9793	NE96	1-p21
ES9088	9088	ENK-500C	1-p24
ES9089	9089	ENK-500T	1-p24
ES9090	7182	EHR-500	1-p24
ES9091	7339	ENK50C-HR	1-p22
ES9092	7341	ENK50T-HR	1-p22
ES9093	9093	ENKCD-50C	6-p08
ES9094	9094	ENKCD-50T	6-p08
HPS01	7005	HPS250-BT30A	4-p34
HPS02	7006	HPS250-BT30B	4-p34
HPS03	7007	HPS250-BT30C	4-p34
HPS04	7011	HPS500-BT30A	4-p34
HPS05	7012	HPS500-BT30B	4-p34
HPS06	7013	HPS500-BT30C	4-p34
HPS07	7008	HPS250-CAT40A	4-p35
HPS08	7009	HPS250-CAT40B	4-p35
HPS09	7010	HPS250-CAT40C	4-p35
HPS10	7014	HPS500-CAT40A	4-p35
HPS11	7015	HPS500-CAT40B	4-p35
HPS12	7016	HPS500-CAT40C	4-p35
HR10303	2002	T-751	6-p17

Legacy	Product Code	Product Name	Page
K076211	1038	K-213	6-p12
K155211	2030	K-204	6-p12
K-247	2056	K-247	6-p12
K301085	2148	KCH-03 (5.0)	6-p14
K812A271	9159	HES510-R8-SK	4-p16
K812A272	9160	HES510-ST32-SK	4-p16
KBS1067	1067	TP-12	6-p10
KBS61065	1146	KBS-101	1-p16
KBS61557	1145	EBS-101	1-p26
LS10815	1302	LS-100	1-p12
LS10834	62505	VEA	1-p14
LS10848	62526	FBA-2	1-p14
LS10853	62527	NGA	1-p14
LS10867	62751	FVA	1-p14
LS10875	62502	VES	1-p14
LS10891	62525	LKE-2A	1-p14
LS10900	64131	S-008	1-p11
LS10902	64132	S-012	1-p11
LS10904	64133	S-018	1-p11
LS10905	64134	S-024	1-p11
LS10906	64135	S-032	1-p11
LS10908	64136	S-040	1-p11
LS10910	64137	S-060	1-p11
LS10912	64138	S-080	1-p11
LS10914	64139	S-100	1-p11
LS10915	64140	S-150	1-p11
LS10918	62814	62814	1-p14
LS10919	62552	62552	1-p19
LS10922	62871	62871	1-p19
LS10923	62555	62555	1-p19
LS10927	62557	62557	1-p19
LS10931	62559	62559	1-p19
LS10932	62560	62560	1-p19
LS10963	62840	62840	1-p19
LS11380	1380	SLS-16	1-p13
LS22016	2016	K-248	6-p17
LS22017	2017	K-249	6-p17
LS51307	1307	ML-8	1-p13
NK06104	64832	CWS80G20mm	1-p37
NK10209	90529	CHS-2.9	6-p04
NK10210	90593	CHS-3.175	6-p04
NK10215	90592	CHS-2.35	6-p04
NK10216	90508	CHS-0.8	6-p04
NK10218	90510	CHS-1.0	6-p04
NK10219	90515	CHS-1.5	6-p04
NK10220	90516	CHS-1.6	6-p04
NK10221	90520	CHS-2.0	6-p04
NK10222	90525	CHS-2.5	6-p04
NK10223	90530	CHS-3.0	6-p04
NK10224	90524	CHS-2.4	6-p04
NK11033	64822	RP30mm	1-p37
NK11043	1043	CNA	6-p09
NK11045	1045	NCH-01	6-p15
NK45230	2906	NA45-230	1-p35
NK45400	2905	NA45-400	1-p35
NK45800	64837	CWS80G30mm	1-p37
NK45801	64838	CWH80G30mm	1-p37
NK60100	2990	NSP-601A	1-p34
NK86A46S	64836	CWH46G30mm	1-p37
NK90230	2907	NA90-230	1-p35
PL10622	2011	K-220	6-p16
PL10637	91093	CH8-3.175	6-p05
PL10641	90216	CH20-16	6-p05
PL10670	91228	CH5-2.8	6-p05
PL10671	91234	CH5-3.4	6-p05
PL10672	91225	CH5-2.5	6-p05
PL10673	91235	CH5-3.5	6-p05
PL10674	91236	CH5-3.6	6-p05

INDEX (Legacy)

Legacy	Product Code	Product Name	Page
PL10675	91296	CH5-6.35	6-p05
PL10676	91250	CH5-5.0	6-p05
PL10677	91240	CH5-4.0	6-p05
PL10678	91245	CH5-4.5	6-p05
PL10679	91244	CH5-4.4	6-p05
PL10681	91243	CH5-4.3	6-p05
PL10682	91237	CH5-3.7	6-p05
PL10683	91227	CH5-2.7	6-p05
PL11464	91206	CH5-0.6	6-p05
PL11465	91207	CH5-0.7	6-p05
PL11466	91293	CH5-3.175	6-p05
PL11467	91208	CH5-0.8	6-p05
PL11468	91209	CH5-0.9	6-p05
PL11469	91211	CH5-1.1	6-p05
PL11470	91212	CH5-1.2	6-p05
PL11488	91210	CH5-1.0	6-p05
PL11489	91220	CH5-2.0	6-p05
PL11490	91230	CH5-3.0	6-p05
PL11492	91222	CH5-2.2	6-p05
PL11494	91215	CH5-1.5	6-p05
PL11495	91216	CH5-1.6	6-p05
PL11498	91218	CH5-1.8	6-p05
PL11502	91260	CH5-6.0	6-p05
PL11517	91016	CH8-1.6	6-p05
PL11521	91092	CH8-2.35	6-p05
PL11522	91024	CH8-2.4	6-p05
PL11523	91025	CH8-2.5	6-p05
PL11525	91026	CH8-2.6	6-p05
PL11531	91011	CH8-1.1	6-p05
PL11532	91022	CH8-2.2	6-p05
PL11533	91013	CH8-1.3	6-p05
PL11536	91012	CH8-1.2	6-p05
PL11539	91008	CH8-0.8	6-p05
PL11540	91010	CH8-1.0	6-p05
PL11555	91014	CH8-1.4	6-p05
PL11556	91015	CH8-1.5	6-p05
PL11568	91017	CH8-1.7	6-p05
PL11569	91018	CH8-1.8	6-p05
PL11574	91020	CH8-2.0	6-p05
PL11578	91028	CH8-2.8	6-p05
PL11588	91030	CH8-3.0	6-p05
PL12022	2022	K-257	6-p12
PL12023	2023	K-258	6-p12
PL12024	2024	K-259	6-p12
PL42617	91527	CHK-2.7	6-p03
PL42662	91522	CHK-2.2	6-p03
PL42663	91525	CHK-2.5	6-p03
PL42665	91505	CHK-0.5	6-p03
PL42667	91507	CHK-0.7	6-p03
PL42668	91508	CHK-0.8	6-p03
PL42669	91530	CHK-3.0	6-p03
PL42670	91531	CHK-3.1	6-p03
PL42671	91543	CHK-4.3	6-p03
PL42672	91520	CHK-2.0	6-p03
PL42673	91544	CHK-4.4	6-p03
PL42674	91547	CHK-4.7	6-p03
PL42675	91596	CHK-6.35	6-p03
PL42676	91550	CHK-5.0	6-p03
PL42677	91551	CHK-5.1	6-p03
PL42678	91540	CHK-4.0	6-p03
PL42679	91556	CHK-5.6	6-p03
PL42680	91594	CHK-4.76	6-p03
PL42681	91521	CHK-2.1	6-p03
PL42682	91512	CHK-1.2	6-p03
PL42685	91593	CHK-3.175	6-p03
PL42686	91560	CHK-6.0	6-p03
PL42687	91545	CHK-4.5	6-p03
PL42689	91529	CHK-2.9	6-p03
PL42690	91592	CHK-2.35	6-p03
PL42691	91510	CHK-1.0	6-p03
PL42692	91509	CHK-0.9	6-p03
PL42693	91513	CHK-1.3	6-p03
PL42694	91528	CHK-2.8	6-p03
PL42695	91515	CHK-1.5	6-p03
PL42696	91516	CHK-1.6	6-p03
PL42697	91559	CHK-5.9	6-p03
PL42698	91518	CHK-1.8	6-p03
PL42699	91511	CHK-1.1	6-p03
PL42700	91514	CHK-1.4	6-p03
PL42701	91534	CHK-3.4	6-p03
PL42702	91538	CHK-3.8	6-p03
PL42703	91554	CHK-5.4	6-p03
PL42704	91555	CHK-5.5	6-p03
PL42705	91533	CHK-3.3	6-p03
PL42706	91536	CHK-3.6	6-p03
PL42707	91535	CHK-3.5	6-p03
PL42708	91552	CHK-5.2	6-p03
PL42709	91517	CHK-1.7	6-p03
PL42710	91524	CHK-2.4	6-p03
PL42711	91541	CHK-4.1	6-p03
PL42712	91526	CHK-2.6	6-p03
PS12119	2119	CHN-E	6-p06
RA10406	2008	WR10X10	6-p16
RA11452	91193	CHG-3.175	6-p02
RA11697	91140	CHG-4.0	6-p02
RA11698	91194	CHG-4.76	6-p02
RA11709	91150	CHG-5.0	6-p02
RA11714	91196	CHG-6.35	6-p02
RA11766	91116	CHG-1.6	6-p02
RA11771	91192	CHG-2.35	6-p02
RA11772	91130	CHG-3.0	6-p02
RA11773	91160	CHG-6.0	6-p02
RA11777	91110	CHG-1.0	6-p02
RA11778	91115	CHG-1.5	6-p02
RA11780	91120	CHG-2.0	6-p02
RA11781	91125	CHG-2.5	6-p02
RA11803	91413	CHA-1.3	6-p02
RA11804	91409	CHA-0.9	6-p02
RA11805	91408	CHA-0.8	6-p02
RA11806	91410	CHA-1.0	6-p02
RA11807	91411	CHA-1.1	6-p02
RA11808	91412	CHA-1.2	6-p02
RA11809	91416	CHA-1.6	6-p02
RA11810	91418	CHA-1.8	6-p02
RA11811	91420	CHA-2.0	6-p02
RA11812	91492	CHA-2.35	6-p02
RA11813	91430	CHA-3.0	6-p02
RA11814	91415	CHA-1.5	6-p02
RA11815	91414	CHA-1.4	6-p02
RA11818	91493	CHA-3.175	6-p02
RA11819	91440	CHA-4.0	6-p02
RA11820	2122	K-263	6-p07
RA11821	91425	CHA-2.5	6-p02
RA11822	91419	CHA-1.9	6-p02
RA11823	91435	CHA-3.5	6-p02
RA11824	91424	CHA-2.4	6-p02
RA11826	91426	CHA-2.6	6-p02
RA11828	91428	CHA-2.8	6-p02
RA11829	91429	CHA-2.9	6-p02
RA11830	91431	CHA-3.1	6-p02
RA11831	91421	CHA-2.1	6-p02
RA11900	2129	K-265	6-p07
RA12012	2012	WR8X5	6-p16
RA12018	2018	WR20X24	6-p16
RA12045	2045	WR22X27	6-p16
RE10178	7097	IH-300	1-p08

Legacy	Product Code	Product Name	Page	
RE10182	2900	IC-300	1-p10	
RE10188	2810	HG-200	1-p09	
RE10207	2009	WR7X5.1	6-p16	
RE10210	1015	CN-01	1-p18	
RE10235	2904	BMH-300	1-p09	
RE10247	1012	MFC-300S	1-p09	
RE10252	1013	MFC-300M	1-p09	
RE10266	2901	KC-300	1-p10	
RE10290	2010	WR7X5.5	6-p16	
RE10356	90016	K-253	6-p06	
RE10360	90316	K-252	6-p06	
RE10389	2006	K-232	6-p17	
RE10394	2007	K-231	6-p17	
RE10444	90430	CHC-3.0	6-p02	
RE10459	90930	CHM-3.0	6-p04	
RE11008	1144	IR-310	1-p08	
RE11593	90492	CHC-2.35	6-p02	
RE11600	90916	CHM-1.6	6-p04	
RE11602	90992	CHM-2.35	6-p04	
RE11604	90993	CHM-3.175	6-p04	
RE11605	90910	CHM-1.0	6-p04	
RE11606	90493	CHC-3.175	6-p02	
RE11609	90920	CHM-2.0	6-p04	
RE11611	90416	CHC-1.6	6-p02	
RE11625	90692	CHH-2.35	6-p02	
RE11630	90693	CHH-3.175	6-p02	
RE11659	90616	CHH-1.6	6-p02	
RE11729	90610	CHH-1.0	6-p02	
RE11734	90620	CHH-2.0	6-p02	
RE11739	90630	CHH-3.0	6-p02	
RE11800	64151	M-008	1-p11	
RE11802	64152	M-012	1-p11	
RE11804	64153	M-018	1-p11	
RE11805	64154	M-024	1-p11	
RE11806	64155	M-032	1-p11	
RE11808	64156	M-040	1-p11	
RE11810	64157	M-060	1-p11	
RE11812	64158	M-080	1-p11	
RE11814	64159	M-100	1-p11	
RE11815	64160	M-150	1-p11	
RE11900	64171	L-008	1-p11	
RE11902	64172	L-012	1-p11	
RE11904	64173	L-018	1-p11	
RE11905	64174	L-024	1-p11	
RE11906	64175	L-032	1-p11	
RE11908	64176	L-040	1-p11	
RE11910	64177	L-060	1-p11	
RE11912	64178	L-080	1-p11	
RE11914	64179	L-100	1-p11	
RE11915	64105	64105	1-p11	
RE11916	64106	64106	1-p11	
RE11917	64107	64107	1-p11	
RE11925	64180	L-150	1-p11	
RE18060	8060	HA-500	1-p16	
RE22001	2001	WR6X4.5	6-p16	
RE22014	2014	K-233	6-p17	
RE22015	2013	K-212	6-p17	
RE82046	2046	K-236	6-p17	
RO10163	1004	IM-301	1-p33	
RO10163A	1003	IM-300	1-p33	
RO10214	1009	RG-01	1-p18	
RO10228	1010	RG-02	1-p18	
SHE8103	8103	FC-24	6-p09	
T815001I	1122	PR-304	1-p38	
T815016I	1120	PR-03	6-p10	
T815220	2042	K-238	6-p12	
U235406	1544	U235406	5-p05	
Y150022I	1125	PR2-304S	1-p38	

Legacy	Product Code	Product Name	Page	
Z094005	62508	62508	1-p19	
Z094006	62507	62507	1-p19	
Z094007	62506	62506	1-p19	
Z095008	62509	62509	1-p19	
Z100001	1124	AFC-40	6-p09	
Z101240	2041	K-237	6-p12	

1
EmaxEVO
ESPERT
ROTUS
IMPULSE
PRESTO II
Sheenus ZERO
2
iSpeed3
E2000 ø1.0"/ø0.98"/ø0.897"
E3000 – One Piece
E3000 – Modular
ø1.18"
ø1.0"/ø0.98" ø0.897"
E3000 – 80,000rpm
E4000
3
MA
ø0.897"
ø1.0" ø0.98"
ø1.18"
MS
ø0.75" ø0.79"
ø0.87" ø0.91"
ø1.0" ø0.98"
4
HES
iSpeed5
HTS
HPS
PLANET
Xpeed
ABT
5
AIR LINE KIT
6
PARTS
7
TECHNICAL DATA
8
APPLICATION EXAMPLES
INDEX

Product Name Changes

● The product names of the following items have been changed.

Product	New Name	Old Name	Page
ELECTER / ROTUS Attachment	KBS-101	KBS-100	1-p16
	IR-310	IR-300	1-p8
	EBS-101	EBS-100	1-p26
E3000 / MA Series Spindle	NR-403E	NR-402E	2-p59, 3-p21
	NR-453E	NR-452E	2-p58, 3-p20
	RAS-151E	RAS-150E	2-p60, 3-p22
	RAX-271E/71E	RAX-270E/70E	2-p60, 3-p22
	RA-151E	RA-150E	2-p61, 3-p23
	RA-271E	RA-270E	2-p61, 3-p23
E3000 / MA Series Speed Reducer	ARG-011E	ARG-01E	2-p66, 3-p24
	ARG-021E	ARG-02E	2-p66, 3-p24
E2280 / E3000 / MA Series Spindle	NR-H2551/NR-2551	NR-H2550/NR-2550	2-p23, 3-p14
	NRR-2651	NRR-2650	2-p23
	NR-303	NR-302	2-p31, 3-p6
	NR-2351	NR-2350	2-p31, 3-p6
	NR-311	NR-310	2-p33, 3-p8
	RAS-101	RAS-100	2-p32, 3-p7
E2280 / E3000 / MA Series Speed Reducer	ARG-H2504N/ARG-2504N	ARG-H2504/ARG-2504	2-p24, 3-p15
	ARG-H2516N/ARG-2516N	ARG-H2516/ARG-2516	2-p24, 3-p15
E3000 / E3200 Control Panel Extension Cord	E3000-PEX4	U557-005	2-p42, 2-p72, 4-p9, 4-p15
MA Series Air Motor	AM-H2526R/AM-H2526L	AM-H2525R/AM-H2525L	3-p13
	AM-2526R/AM-2526L	AM-2525R/AM-2525L	3-p13
	AM-H2526RA/AM-H2526LA	AM-H2525RA/AM-H2525LA	3-p13
	AM-2526RA/AM-2526LA	AM-2525RA/AM-2525LA	3-p13
MS Series Air Motor Spindle	MSS-19 Series	MS-19 Series	3-p30
	MSS-20 Series	MS-20 Series	3-p30
	MSS-22 Series	MS-22 Series	3-p31
	MSSH-25 Series	MSH-25 Series	3-p33
	MSS-25 Series	MS-25 Series	3-p33
MS Series Air Turbine Spindle	AMS-1210	AMS-1200	—
	AMS-1501	AMS-1500	—
ABS Series	ABS-400	AMS-400	—
	ABS-800	AMS-800	—
	ABS-1600	AMS-1600	—
HES510 Series	HES510-OO	HES500-OO	4-p4~4-p7
HES810 Series	HES810-BT30	HES800-BT30	4-p11
	HES810-BT40	HES800-BT40	4-p11
	HES810-NT40	HES800-NT40	4-p11
	HES810-CAT40	HES800-CAT40	4-p11
	HES810-BT50	HES800-BT50	4-p12
	HES810-HSK A63	HES800-HSK A63	4-p12
HTS Series	HTS1501S-OO	HTS1500S-OO	4-p19~4-p21
SMS Series	SMS401-OO	SMS400-OO	—
Hose for Piping 6 ft with Metal Fitting	K-275	K-260	6-p12

Discontinued Products

● The Following Products have been Discontinued.

Product	Product Name	Recommended Replacement Product
ELECTER E-max Series	NLS-100	NLS-110
	NE129	NE249
	EL351C-IR12	EV410-IR
	EL261C-IR12	EV250-IR
	NK-351	ENK-410S
	NK-261	ENK-250T
	NK-151	—
ELECTER-GX Series	NK-350	—
	NK-260	—
	NK-150	—
ELECTER / ROTUS Attachment	ML-4	—
	ML-2	—
	SR-300	—
	MH-300	—
	K-042	—
	NR-302	—
Suspension Stand	K-229	—
ESPERT 500 Attachment	EML-4	—
	EML-2	—
	ENR-302	—
	ENR-420 ATC	—
VIVA-MATE 3	VIVA-MATE 3	—
ECOMO	ESP-603 / ESP-603R	NSP-601
	EA90-20	NA90-230
	EA45-20	NA45-400 / NA45-230
SHEENUS neo	SHEENUS neo	SHEENUS ZERO
SONIC-CUTTER	SONIC-CUTTER	—
PRESTO	PRESTO	PRESTO II
PNEU-SONIC	PNEU-SONIC	
MIRACLE	MIRACLE	—
E3000 Series Spindle	NR-5041E ATC	NR50-5100 ATC
E2550 / E3000 MA Series Spindle	NR-H2532/NR-2532	NR-H2551/NR-2551
E2550 Controller	NE145/NE145-OP1	NE314
E2530 Controller	NE236	NE314
ASTRO-E 500Z Controller	NE147	—
ASTRO-E 500Z Motor Spindle EMS Series	EMS-3041 / EMS-3045	—
	EMS-3052 / EMS-3056	—
ASTRO-E 500Z Brushless Motor EM Series	EM-401 / EM-405	—
	EM-501 / EM-505	—
ASTRO-E 500Z Spindle	NRL-300E	—
	NR-410E ATC	NR40-5100 ATC
	NR-420E ATC	NR40-5100 ATC
ASTRO-E 2550 Brushless Motor	EM-2550	EM25N-5000-J4
ASTRO-E 2550 Spindle	RAS-H2510/RAS-2510	—
	RA-H2510/RA-2510	—
	RA-H2520/RA-2520	—

＊Please contact NSK America for remaining inventories of the discontinued products.

Discontinued Products

The Following Products have been Discontinued.

Product	Product Name	Recommended Replacement Product
E3200 Controller	NE260	NE211
E3200 Selector	NE261	NE212
ASTRO-E 800Z Brushless Motor	EM-801	—
E800Z Series	NE147-800	NE211
	NE62	NE212
	NE135	—
	NR-3080	NR-3080S
	NRA-5080	NRAF-5080
	EM-805	EM-3080J
	BRB-4	—
	PEX-4	E3000-PEX4
	BRB-2 / BRC-4	—
	AC-SO3	—
	AC-STP1 / AC-STP2	—
ASTRO-E 250 Controller	NE72	—
ASTRO-E 250 Brushless Motor	EM-250	EM25-5000-J4
	EM-255	EM25-5000-J4
ASTRO-E 250 Spindle	NR-320	—
	NR-260E ATC	—
ASTRO-E 6040 Standard Set	EMS-6040S	—
	EMS-6040KS	—
E6040 Series	NE123	NE246
	EMS-6040K	BMS-4040RA
	EMS-6040	BMS-4040
	EMCD-6040	—
	EMCD-6040K	—
	EMCD-6040K-8M	—
ASTRO System Spindle	NR-301	—
	NR-320	—
	NRL-300	—
	AMH-300	—
	NR-600	—
	NR-302P	—
	RAS-H2510/RAS-2510	—
	RA-H2510/RA-2510	—
	RA-H2520/RA-2520	—
	NRL-300E	—
ASTRO Series MS-19 Series	MS-1930L/MS-1930LA	—
	MS-1908L/MS-1908LA	—
	MS-1902L/MS-1902LA	—
ASTRO Series MS-20 Series	MS-2030L/MS-2030LA	—
	MS-2008L/MS-2008LA	—
	MS-2002L/MS-2002LA	—
ASTRO Series MS-22 Series	MS-2230L/MS-2230LA	—
	MS-2208L/MS-2208LA	—
	MS-2202L/MS-2202LA	—

＊Please contact NSK America for remaining inventories of the discontinued products.

The Following Products have been Discontinued.

Product	Product Name	Recommended Replacement Product
ASTRO Series MS-23 Series	MS-23 Series	—
ASTRO Series MST-23 Series	MST-2330L/MST-2330LA	—
	MST-2308L/MST-2308LA	—
	MST-2302L/MST-2302LA	—
ASTRO Series MSTN-23 Series	MSTN-23 Series	—
ASTRO Series MS-25 Series	MS-2524L/MS-2524LA	—
	MS-2506L/MS-2506LA	—
	MS-2501L/MS-2501LA	—
ASTRO Series MSH-25 Series	MSH-2524L/MSH-2524LA	—
	MSH-2506L/MSH-2506LA	—
	MSH-2501L/MSH-2501LA	—
AMS Series	AMS-600	—
	AMS-1210	—
	AMS-1501	—
ASTRO-X Series	AMX-50 Series SD type	—
	AMX-65 Series SD type	—
	AMX-80 Series SD type	—
	AMX-50 Series BD type	—
	AMX-65 Series BD type	—
	AMX-80 Series BD type	—
	AMX-50 Series SH type	—
	AMX-65 Series SH type	—
	AMX-80 Series SH type	—
AMX Series	AMX Series	—
	AMXL Series	—
	AMXF Series	—
Pulley Spindle	PS, PSA, PST Series	Contact NSK America
HES Series	HES-BT40 RA H/HES-NT40 RA H	—
	HES-BT50 RA H/HES-NT50 RA H	—
	HES800-IT40	—
	HESCD-501-4M	EMCD-810-4M
	HESCD-501-6M	EMCD-810-6M
	HESCD-501-8M	EMCD-810-8M
SMS Series	SMS400-BT30-SK	Contact NSK America
	SMS400-NT30-SK	Contact NSK America
	SMS400-NT30M-SK	Contact NSK America
	SMS400-BT40-SK	Contact NSK America
	SMS400-NT40-SK	Contact NSK America
	SMS400-NT40M-SK	Contact NSK America
BT Series	BANTAM150/250	—

＊Please contact NSK America for remaining inventories of the discontinued products.

Discontinued Products

● The Following Products have been Discontinued.

Product	Product Name	Recommended Replacement Product
PL Series	PL400-M1827	—
	PL400-BT30/PL400-BT40	—
	PL400-NT30/PL400-NT40	—
	PL400-H3440	—
	PL550-H3440	PL600-H3440
	PL850-H3440	—
	PL2000-H1227	—
	HM-19.05	—
	HS-12	—
	PL10550	—
	PL10566	—
	PL1500-H3440	—
AIR LINE KIT	AL-902	—
	AL-807	AL-H1206
	AL-0306	AL-H1207F
	AL-0201	AL-C1204
	AL-0203	—
	AL-0304	AL-M1202
	K-239	AL-M1202
	AL-951	AL-M1203BS2
	AL-982	AL-A1205

✻Please contact NSK America for remaining inventories of the discontinued products.

⚠ Cautions for Safety

Cautions for Handling and Operation

- Read these cautions carefully and only use in the manner intended.
- Safety instructions are intended to avoid potential hazards that could result in personal injury or damage to the device. Safety instructions are classified as follows in accordance with the seriousness of the risk.

⚠ WARNING

A hazard that could result in bodily injury or damage to the device if the safety instructions are not followed.

⚠ CAUTION

A hazard that could result in light or moderate bodily injury or damage to the device if the safety instructions are not followed.

⚠ WARNING

① **The final responsibility for ensuring a product's suitability for use in a given application is left to the designer of the equipment in which NAKANISHI's motor / spindle is installed.**

NAKANISHI offers motors and spindles with a wide variety of capabilities and specifications. Please carefully check the product's specifications against the requirements of your application and verify suitability and safety prior to initial use.

② **NAKANISHI product's are intended for use by trained, knowledgeable, highly experienced professionals only.**

1. Spindles for machine tools are not hand tools. These are designed to be mounted on machines.
2. Never touch the motor, spindle or cutting tools when the spindle is rotating.
3. Always wear safety glasses. Everyday eyeglasses only have impact resistant lenses, they are not safety glasses. Also use a dust or face mask whenever the motor is running.
4. Check that the collet has been securely tightened prior to each use.
5. Do not use unbalanced or low precision tools.

③ **Do not apply excessive force.**

Do not apply excessive force (deep per pass cuts, high feed rates). This may cause tool slippage or spindle damage.

④ **Never operate or handle the product until you have thoroughly read the owner's manual and safe operation is confirmed.**

1. Handle or operate the product only after sufficient precautions to prevent injury have been taken and safety is confirmed.
2. Prior to operating the product confirm that all of the above safety precautions have been taken. Do not connect the product to an energy source or supply compressed air until all safety checks have been confirmed.

⚠ CAUTION

① Caution for operating

1. Do not drop or hit spindle, the shock can damage internal components.
2. Confirm if wiring or connection is correct prior to use. Failure to make proper connections may damage the product or cause undesirable operation.
3. Stop working immediately when abnormal rotations or unusual vibrations are observed.
4. If the spindle has not been used for a long period of time, in excess of one month, please read "Break-In Procedure in owner's manual" prior to use.
5. Check if tools, chucks or hoses are damaged and if the compressed air is properly set (Air Line Kit) before working.

② Cutting tools cautions

1. Always clean the chuck. If ground particles or metal chips stick to the inside of spindle or the chuck, this will cause damage to the chuck or spindle and loss of precision.
2. Always clean the shank of the tools to avoid loss of precision, if ground particles or metal chips stick to the shank, there will be a loss of precision.
3. Do not over tighten the chuck. This will cause spindle damage.
4. Select suitable products or tools for the application. Do not exceed the capabilities of the spindles or cutting tools.
5. Do not exceed the maximum recommend speed specified by the cutting tool manufacturer.
6. Use only tools with shank diameter tolerance similar to the chuck I.D. tolerance.

③ Installation of Air Line Kit

1. All NAKANISHI air motors and air turbines, with the exception of Presto/Presto II and Air Bearing Spindles, require mist lubrication. Failure to use an air line kit and supply proper lubrication can cause motor speed to drop and severely shorten the life of the motor and spindle.
2. Make sure the air line kit's air filter stays clean. Introduction of water or foreign particles into the spindle will cause damage to internal components.

④ Never use unfiltered air

Air containing water or foreign particles will cause damage to motor and spindle components and severely shorten the service life. Always use clean, dry air with NAKANISHI's recommended air line kit.

NAKANISHI Products are not user serviceable. Any disassembly or modification of the products are the sole responsibility of the user. NAKANISHI will assume no responsibility nor honor any claims for products that have been disassembled or altered in any way by any party other than NAKANISHI.

Sales Terms and Conditions

Sales Policy

Possession of this catalog does not constitute the right to purchase from NSK America Corporation.

We sell our products through our qualified local distributors. For local distributor information, please contact our customer service at 800-585-4675 (8:30AM -5:00PM CST) or online at http://www.nskamericacorp.com/distributormap2.html. Our customer service will be happy to help you to locate your local distributors.

Prices, design and specifications of the products described are current as of the date when this catalog was approved for circulation (1/1/2021).
We reserve the right to discontinue, rename or reclassify products, change prices, design, and specification without notice. Please contact your local NSK representative or our customer service for current product information.

Prices are based on FOB NSK America Corporation in Hoffman Estates, IL.
Title and all other risks shall be passed to the purchaser upon tender of shipment to the carrier.

Limited Warranty

NSK AMERICA CORPORATION PRODUCTS ARE WARRANTED TO BE FREE FROM DEFECTS IN MATERIAL AND WORKMANSHIP FOR THE PERIOD OF 180 DAYS AFTER DATE OF DELIVERY TO PURCHASER, EXCEPT FOR NORMAL WEAR AND TEAR, PROVIDED THAT (I) THE PRODUCT HAS BEEN OPERATED AND MAINTAINED IN ACCORDANCE WITH THE PRODUCT INSTRUCTION AND MAINTENANCE MANUAL AND (II) THE PRODUCT HAS NOT BEEN SUBJECTED TO MISUSE, ABUSE, ELECTRICAL FAILURE, IMPROPER PREVENTATIVE MAINTENANCE, OR ALTERATION OR MODIFICATION WHICH RESULT IN DAMAGE TO THE PRODUCT OR FAILURE TO OPERATE IN ACCORDANCE WITH THE SPECIFICATION, OR IMPROPER REPAIR, MODIFICATION OR SERVICING OF THE PRODUCTS PERFORMED BY ANY UNAUTHORIZED SERVICE PERSONNEL AND THE USE OR OPERATION OF THE PRODUCTS IN CONJUNCTION WITH ANY ACCESSORIES OR AUXILIARY EQUIPMENT NOT SPECIFICALLY APPROVED BY US IN WRITING, OR ACCIDENT. DURING THE TERM OF THIS WARRANTY ANY PART WHICH IS DETERMINED BY US TO HAVE DEFECTS IN MATERIAL OR WORKMANSHIP AND RETURNED TO US, SHIPPING COSTS PREPAID, WILL BE REPAIRED OR REPLACED AT OUR DISCRETION.

NSK AMERICA CORPORATION'S WARRANTY HEREIN IS IN LIEU OF AND EXCLUDES ALL OTHER WARRANTIES OF NSK AMERICA CORPORATION, THE MANUFACTURER OF THE PRODUCTS AND ANY OTHER ENTITY INVOLVED IN THE SALE OR SERVICING OF THE PRODUCTS AND THEIR RESPECTIVE SUBSIDIARIES RELATED AND AFFILIATED COMPANIES, WHETHER EXPRESSED, IMPLIED, STATUTORY OR OTHERWISE CREATED UNDER APPLICABLE LAW, INCLUDING BUT NOT LIMITED TO ANY WARRANTY OF MERCHANTABILITY AND ANY WARRANTY OF FITNESS FOR A PARTICULAR PURPOSE OR USE. IN NO EVENT, SHALL NSK AMERICA CORPORATION, THE MANUFACTURER OF THE PRODUCTS, OR ANY OTHER ENTITY INVOLVED IN THE SALE OR SERVICING OF THE PRODUCTS AND THEIR SUBSIDIARIES, RELATED AND AFFILIATED COMPANIES, BE LIABLE FOR SPECIAL, INCIDENTAL OR CONSEQUENTIAL DAMAGES INCLUDING LOSS OF PRODUCTS, WHETHER OR NOT CAUSED BY OR RESULTING FROM THEIR NEGLIGENCE, UNLESS SPECIFICALLY PROVIDED HEREIN.

PURCHASER'S SOLE AND EXCLUSIVE REMEDY UNDER THIS WARRANTY SHALL BE THE REPLACEMENT OR REPAIR, AT NSK AMERICA CORPORATION'S SOLE DISCRETION, OF ANY DEFECTIVE PRODUCT OR PART THEREOF. IN NO EVENT SHALL NSK AMERICA CORPORATION'S LIABILITY EXCEED THE PURCHASE PRICE PAID FOR PRODUCT.

Returned Goods

We accept returns only under the following conditions.

- No return goods can be accepted without prior approval of our office.
- Within 30 days from date of our shipment.
- No return will be accepted for factory order products.
- Product returned must be unused and in new and sellable condition by our sole determination, or the return will be rejected.
- Returned to us with prepaid shipping cost by the purchaser.
- In original box and/or packaging, or a cost for a new box/packaging will be charged.
- Restocking charge of 15% of the invoiced price or $20.00 whichever is greater will be charged.

Please contact your local NSK America Representative or our industrial customer service department for a Return Authorization Number.



NSK AMERICA

NSK America Corporation
1800 Global Parkway
Hoffman Estates, IL 60192
Phone: (847) 843-7664
Toll Free: (800) 585-4675
Fax: (847) 843-7622
info@nskamericacorp.com
www.nskamericacorp.com

Distributed by: